# ADC08131/ADC08134/ADC08138 8-Bit High-Speed Serial I/O A/D Converters with Multiplexer Options, Voltage Reference, and Track/Hold Function

**Check for Samples: ADC08131, ADC08134, ADC08138**

## FEATURES

- **Serial Digital Data Link Requires Few I/O Pins**
- **Analog Input Track/Hold Function**
- **4- or 8-Channel Input Multiplexer Options with Address Logic**
- **On-Chip 2.5V Band-Gap Reference (±2% Over Temperature Ensured)**
- **No Zero or Full Scale Adjustment Required**
- **TTL/CMOS Input/Output Compatible**
- **0V to 5V Analog Input Range with Single 5V Power Supply**

## APPLICATIONS

- **Digitizing Automotive Sensors**
- **Process Control/Monitoring**
- **Remote Sensing in Noisy Environments**
- **Embedded Diagnostics**

## KEY SPECIFICATIONS

- **Resolution: 8 Bits**
- **Conversion Time ($f_C$ = 1 MHz): 8 µs (Max)**
- **Power Dissipation: 20 mW (Max)**
- **Single Supply: 5 $V_{DC}$ (±5%)**
- **Total Unadjusted Error: ±½ LSB and ±1 LSB**
- **Linearity Error ($V_{REF}$ = 2.5V): ±½ LSB**
- **No Missing Codes (Over Temperature)**
- **On-Board Reference: +2.5V ±1.5% (Max)**

## DESCRIPTION

The ADC08131/ADC08134/ADC08138 are 8-bit successive approximation A/D converters with serial I/O and configurable input multiplexers with up to 8 channels. The serial I/O is configured to comply with the MICROWIRE serial data exchange standard for easy interface to the COPS™ family of controllers, and can easily interface with standard shift registers or microprocessors.

All three devices provide a 2.5V band-gap derived reference with ensured performance over temperature.

A track/hold function allows the analog voltage at the positive input to vary during the actual A/D conversion.

The analog inputs can be configured to operate in various combinations of single-ended, differential, or pseudo-differential modes. In addition, input voltage spans as small as 1V can be accommodated.

Please be aware that an important notice concerning availability, standard warranty, and use in critical applications of Texas Instruments semiconductor products and disclaimers thereto appears at the end of this data sheet.

COPS is a trademark of Texas Instruments.
All other trademarks are the property of their respective owners.

PRODUCTION DATA information is current as of publication date. Products conform to specifications per the terms of the Texas Instruments standard warranty. Production processing does not necessarily include testing of all parameters.

Copyright © 1999–2013, Texas Instruments Incorporated

## Connection Diagrams

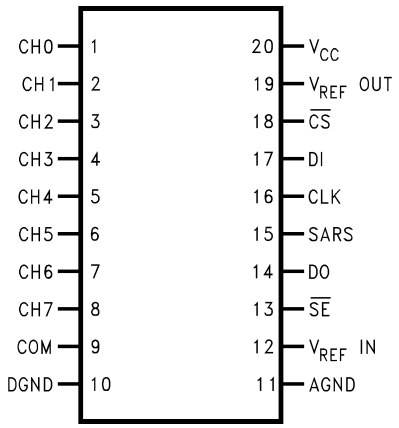


**Figure 1. ADC08138CIWM Small Outline Packages**

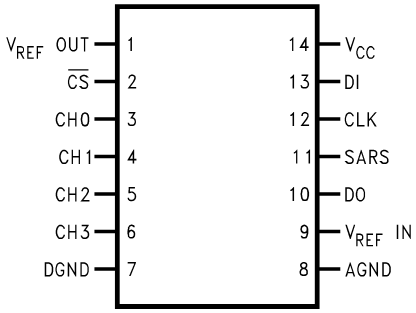


**Figure 2. ADC08134CIWM Small Outline Packages**

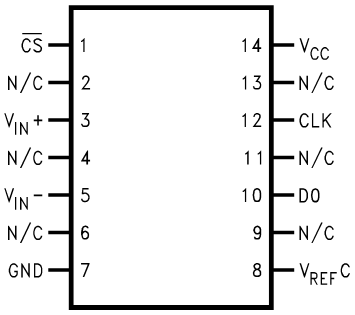


**Figure 3. ADC08131CIWM Small Outline Package**


Copyright © 1999–2013, Texas Instruments Incorporated

These devices have limited built-in ESD protection. The leads should be shorted together or the device placed in conductive foam during storage or handling to prevent electrostatic damage to the MOS gates.

## Absolute Maximum Ratings(1)(2)(3)

| | | | |
|---|---|---|---|
| Supply Voltage ($V_{CC}$) | | | 6.5V |
| Voltage at Inputs and Outputs | | | −0.3V to $V_{CC}$ + 0.3V |
| Input Current at Any Pin(4) | | | ±5 mA |
| Package Input Current(4) | | | ±20 mA |
| Power Dissipation at $T_A$ = 25°C(5) | | | 800 mW |
| ESD Susceptibility(6) | | | 1500V |
| Soldering Information | N Package (10 sec.) | | 260°C |
| | SOIC Package | Vapor Phase (60 sec.) | 215°C |
| | | Infrared (15 sec.) | 220°C |
| Storage Temperature | | | −65°C to +150°C |

(1) All voltages are measured with respect to AGND = DGND = 0 $V_{DC}$, unless otherwise specified.
(2) Absolute Maximum Ratings indicate limits beyond which damage to the device may occur.
(3) If Military/Aerospace specified devices are required, please contact the Texas Instruments Sales Office/ Distributors for availability and specifications.
(4) When the input voltage ($V_{IN}$) at any pin exceeds the power supplies ($V_{IN}$ < (AGND or DGND) or $V_{IN}$ > $AV_{CC}$) the current at that pin should be limited to 5 mA. The 20 mA maximum package input current rating limits the number of pins that can safely exceed the power supplies with an input current of 5 mA to four pins.
(5) The maximum power dissipation must be derated at elevated temperatures and is dictated by $T_{JMAX}$, $\theta_{JA}$ and the ambient temperature, $T_A$. The maximum allowable power dissipation at any temperature is $P_D = (T_{JMAX} - T_A)/\theta_{JA}$ or the number given in the Absolute Maximum Ratings, whichever is lower. For these devices $T_{JMAX}$ = 125°C. The typical thermal resistances ($\theta_{JA}$) of these parts when board mounted for the ADC 08131 and the ADC08134 is 140°C/W and 91°C/W for the ADC08138.
(6) Human body model, 100 pF capacitor discharged through a 1.5 kΩ resistor.

## Operating Ratings(1)(2)

| | |
|---|---|
| Temperature Range ($T_{MIN} \le T_A \le T_{MAX}$) | −40°C ≤ $T_A$ ≤ +85°C |
| Supply Voltage ($V_{CC}$) | 4.5 $V_{DC}$ to 6.3 $V_{DC}$ |

(1) Operating Ratings indicate conditions for which the device is functional. These ratings do not ensure specific performance limits. For ensured specifications and test conditions, see the Electrical Characteristics. The ensured specifications apply only for the test conditions listed. Some performance characteristics may degrade when the device is not operated under the listed test conditions.
(2) All voltages are measured with respect to AGND = DGND = 0 $V_{DC}$, unless otherwise specified.

Copyright © 1999–2013, Texas Instruments Incorporated

## Electrical Characteristics

The following specifications apply for $V_{CC}$ = +5 $V_{DC}$, $V_{REF}$ = +2.5 $V_{DC}$ and $f_{CLK}$ = 1 MHz unless otherwise specified. **Boldface limits apply for $T_A = T_J = T_{MIN}$ to $T_{MAX}$;** all other limits $T_A = T_J$ = 25°C.

| Symbol | Parameter | Conditions | Typical(1) | Limits(2) | Units (Limits) |
|---|---|---|---|---|---|
| **CONVERTER AND MULTIPLEXER CHARACTERISTICS** | | | | | |
| | Linearity Error | $V_{REF}$ = +2.5 $V_{DC}$ | | **±1** | LSB (max) |
| | Full Scale Error | $V_{REF}$ = +2.5 $V_{DC}$ | | **±1** | LSB (max) |
| | Zero Error | $V_{REF}$ = +2.5 $V_{DC}$ | | **±1** | LSB (max) |
| | Total Unadjusted Error | $V_{REF}$ = +5 $V_{DC}$(3) | | **±1** | LSB (max) |
| | Differential Linearity | $V_{REF}$ = +2.5 $V_{DC}$ | | **8** | Bits (min) |
| $R_{REF}$ | Reference Input Resistance | See(4) | 3.5 | <br>**1.3**<br>**6.0** | kΩ<br>kΩ (min)<br>kΩ (max) |
| $V_{IN}$ | Analog Input Voltage | See(5) | | **($V_{CC}$ + 0.05)**<br>**(GND − 0.05)** | V (max)<br>V (min) |
| | DC Common-Mode Error | $V_{REF}$ = 2.5 $V_{DC}$ | | ±½ | LSB (max) |
| | Power Supply Sensitivity | $V_{CC}$ = +5V ±5%,<br>$V_{REF}$ = +2.5 $V_{DC}$ | | **±¼** | LSB (max) |
| | On Channel Leakage Current(6) | On Channel = 5V,<br>Off Channel = 0V | | 0.2<br>**1** | µA (max) |
| | | On Channel = 0V,<br>Off Channel = 5V | | −0.2<br>**−1** | µA (max) |
| | Off Channel Leakage Current(6) | On Channel = 5V,<br>Off Channel = 0V | | −0.2<br>**−1** | µA (max) |
| | | On Channel = 0V,<br>Off Channel = 5V | | 0.2<br>**1** | µA (max) |
| **DIGITAL AND DC CHARACTERISTICS** | | | | | |
| $V_{IN(1)}$ | Logical “1” Input Voltage | $V_{CC}$ = 5.25V | | **2.0** | V (min) |
| $V_{IN(0)}$ | Logical “0” Input Voltage | $V_{CC}$ = 4.75V | | **0.8** | V (max) |
| $I_{IN(1)}$ | Logical “1” Input Current | $V_{IN}$ = 5.0V | | **1** | µA (max) |
| $I_{IN(0)}$ | Logical “0” Input Current | $V_{IN}$ = 0V | | **−1** | µA (max) |
| $V_{OUT(1)}$ | Logical “1” Output Voltage | $V_{CC}$ = 4.75V:<br>$I_{OUT}$ = −360 µA<br>$I_{OUT}$ = −10 µA | | <br>**2.4**<br>**4.5** | <br>V (min)<br>V (min) |
| $V_{OUT(0)}$ | Logical “0” Output Voltage | $V_{CC}$ = 4.75V<br>$I_{OUT}$ = 1.6 mA | | **0.4** | V (max) |

(1) Typicals are at $T_J$ = 25°C and represent the most likely parametric norm.
(2) Ensured to AOQL (Average Outgoing Quality Level).
(3) Total unadjusted error includes zero, full-scale, linearity, and multiplexer error. Total unadjusted error with $V_{REF}$ = +5V only applies to the ADC08134 and ADC08138. See Note 7 on the following page.
(4) Cannot be tested for the ADC08131.
(5) For $V_{IN(-)} \geq V_{IN(+)}$ the digital code will be 0000 0000. Two on-chip diodes are tied to each analog input (see ADC08138 Simplified Block Diagram) which will forward-conduct for analog input voltages one diode drop below ground or one diode drop greater than $V_{CC}$ supply. During testing at low $V_{CC}$ levels (e.g., 4.5V), high level analog inputs (e.g., 5V) can cause an input diode to conduct, especially at elevated temperatures. This will cause errors for analog inputs near full-scale. The specification allows 50 mV forward bias of either diode; this means that as long as the analog $V_{IN}$ does not exceed the supply voltage by more than 50 mV, the output code will be correct. Exceeding this range on an unselected channel will corrupt the reading of a selected channel. Achievement of an absolute 0 $V_{DC}$ to 5 $V_{DC}$ input voltage range will therefore require a minimum supply voltage of 4.950 $V_{DC}$ over temperature variations, initial tolerance and loading.
(6) Channel leakage current is measured after a single-ended channel is selected and the clock is turned off. For off channel leakage current the following two cases are considered: one, with the selected channel tied high (5 $V_{DC}$) and the remaining seven off channels tied low (0 $V_{DC}$), total current flow through the off channels is measured; two, with the selected channel tied low and the off channels tied high, total current flow through the off channels is again measured. The two cases considered for determining on channel leakage current are the same except total current flow through the selected channel is measured.


Copyright © 1999–2013, Texas Instruments Incorporated

## Electrical Characteristics (continued)

The following specifications apply for $V_{CC}$ = +5 $V_{DC}$, $V_{REF}$ = +2.5 $V_{DC}$ and $f_{CLK}$ = 1 MHz unless otherwise specified. **Boldface limits apply for $T_A = T_J = T_{MIN}$ to $T_{MAX}$;** all other limits $T_A = T_J$ = 25°C.

| Symbol | Parameter | Conditions | Typical(1) | Limits(2) | Units (Limits) |
|---|---|---|---|---|---|
| $I_{OUT}$ | TRI-STATE Output Current | $V_{OUT}$ = 0V | | **−3.0** | µA (max) |
| | | $V_{OUT}$ = 5V | | **3.0** | µA (max) |
| $I_{SOURCE}$ | Output Source Current | $V_{OUT}$ = 0V | | **−6.5** | mA (min) |
| $I_{SINK}$ | Output Sink Current | $V_{OUT}$ = $V_{CC}$ | | **8.0** | mA (min) |
| $I_{CC}$ | Supply Current | | | | |
| | ADC08134, ADC08138 | $\overline{CS}$ = HIGH | | **3.0** | mA (max) |
| | ADC08131(7) | | | **6.0** | mA (max) |

(7) For the ADC08131 $V_{REF}$IN is internally tied to the on chip 2.5V band-gap reference output; therefore, the supply current is larger because it includes the reference current (700 µA typical, 2 mA maximum).

## Electrical Characteristics

The following specifications apply for $V_{CC}$ = +5 $V_{DC}$, and $f_{CLK}$ = 1 MHz unless otherwise specified. **Boldface limits apply for $T_A = T_J = T_{MIN}$ to $T_{MAX}$;** all other limits $T_A = T_J$ = 25°C.

| Symbol | Parameter | Conditions | Typical(1) | Limits(2) | Units (Limits) |
|---|---|---|---|---|---|
| **REFERENCE CHARACTERISTICS** | | | | | |
| $V_{REF}$OUT | Output Voltage | DC08134, ADC08138 | **2.5 ±2%** | 2.5 ±1.5% | V |
| $\Delta V_{REF}/\Delta T$ | Temperature Coefficient | | 40 | | ppm/°C |
| $\Delta V_{REF}/\Delta I_L$ | Load Regulation(3) | Sourcing ($0 \le I_L \le +4$ mA) ADC08134, ADC08138 | 0.003 | **0.1** | %/mA (max) |
| | | Sourcing ($0 \le I_L \le +2$ mA) ADC08131 | 0.003 | **0.1** | |
| | | Sinking ($-1 \le I_L \le 0$ mA) ADC08134, ADC08138 | 0.2 | **0.5** | |
| | | Sinking ($-1 \le I_L \le 0$ mA) ADC08131 | 0.2 | **0.5** | |
| | Line Regulation | 4.75V ≤ $V_{CC}$ ≤ 5.25V | 0.5 | **6** | mV (max) |
| $I_{SC}$ | Short Circuit Current | $V_{REF}$ = 0V ADC08134, ADC08138 | 8 | **25** | mA (max) |
| | | $V_{REF}$ = 0V ADC08131 | 8 | **25** | |
| $T_{SU}$ | Start-Up Time | $V_{CC}$: 0V → 5V $C_L$ = 100 µF | 20 | | ms |
| $\Delta V_{REF}/\Delta t$ | Long Term Stability | | 200 | | ppm/1 kHr |

(1) Typicals are at $T_J$ = 25°C and represent the most likely parametric norm.
(2) Ensured to AOQL (Average Outgoing Quality Level).
(3) Load regulation test conditions and specifications for the ADC08131 differ from those of the ADC08134 and ADC08138 because the ADC08131 has the on-board reference as a permanent load.

Copyright © 1999–2013, Texas Instruments Incorporated

## Electrical Characteristics

The following specifications apply for $V_{CC}$ = +5 $V_{DC}$, $V_{REF}$ = +2.5 $V_{DC}$ and $t_r = t_f$ = 20 ns unless otherwise specified. **Boldface limits apply for $T_A = T_J = T_{MIN}$ to $T_{MAX}$;** all other limits $T_A = T_J$ = 25°C.

| Symbol | Parameter | Conditions | Typical[1] | Limits[2] | Units (Limits) |
|---|---|---|---|---|---|
| $f_{CLK}$ | Clock Frequency | | 10 | | kHz (min) |
| | | | | **1** | MHz (max) |
| | Clock Duty Cycle[3] | | | **40** | % (min) |
| | | | | **60** | % (max) |
| $T_C$ | Conversion Time (Not Including MUX Addressing Time) | $f_{CLK}$ = 1 MHz | | **8** | $1/f_{CLK}$ (max) |
| | | | | **8** | µs (max) |
| $t_{CA}$ | Acquisition Time | | | **½** | $1/f_{CLK}$ (max) |
| $t_{SELECT}$ | CLK High while $\overline{CS}$ is High | | 50 | | ns |
| $t_{SET-UP}$ | $\overline{CS}$ Falling Edge or Data Input Valid to CLK Rising Edge | | | **25** | ns (min) |
| $t_{HOLD}$ | Data Input Valid after CLK Rising Edge | | | **20** | ns (min) |
| $t_{pd1}$, $t_{pd0}$ | CLK Falling Edge to Output Data Valid[4] | $C_L$ = 100 pF: | | | |
| | | Data MSB First | | **250** | ns (max) |
| | | Data LSB First | | **200** | ns (max) |
| $t_{1H}$, $t_{0H}$ | TRI-STATE Delay from Rising Edge of $\overline{CS}$ to Data Output and SARS Hi-Z | $C_L$ = 10 pF, $R_L$ = 10 kΩ (see TRI-STATE Test Circuits and Waveforms) | 50 | | ns |
| | | $C_L$ = 100 pF, $R_L$ = 2 kΩ | | **180** | ns (max) |
| $C_{IN}$ | Capacitance of Logic Inputs | | 5 | | pF |
| $C_{OUT}$ | Capacitance of Logic Outputs | | 5 | | pF |

(1) Typicals are at $T_J$ = 25°C and represent the most likely parametric norm.
(2) Ensured to AOQL (Average Outgoing Quality Level).
(3) A 40% to 60% duty cycle range insures proper operation at all clock frequencies. In the case that an available clock has a duty cycle outside of these limits the minimum time the clock is high or low must be at least 450 ns. The maximum time the clock can be high or low is 100 µs.
(4) Since data, MSB first, is the output of the comparator used in the successive approximation loop, an additional delay is built in (see ADC08138 Simplified Block Diagram) to allow for comparator response time.


Copyright © 1999–2013, Texas Instruments Incorporated

## ADC08138 Simplified Block Diagram

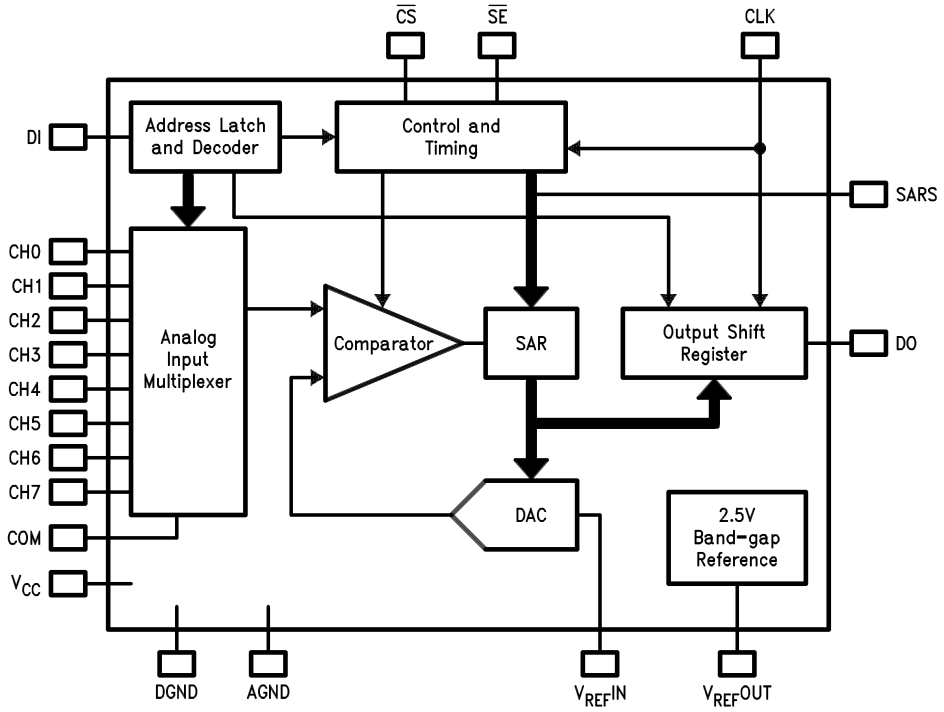

## Typical Converter Performance Characteristics(1)

**Linearity Error vs Reference Voltage**

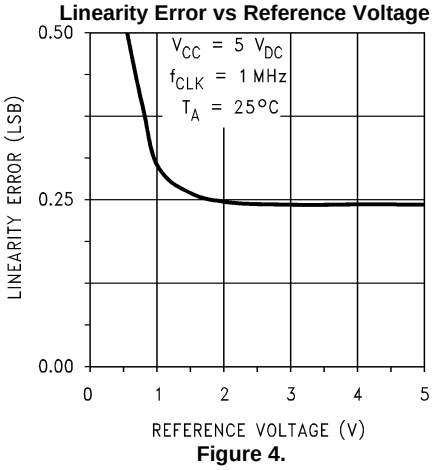


**Figure 4.**

**Linearity Error vs Temperature**

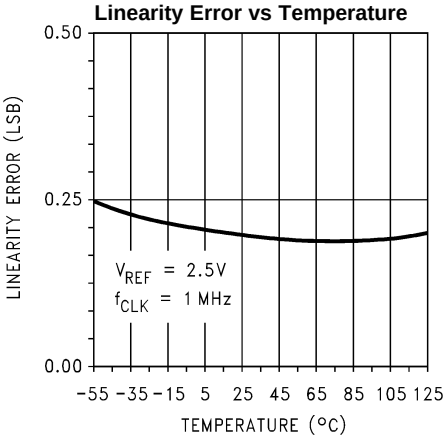


**Figure 5.**

**Linearity Error vs Clock Frequency**

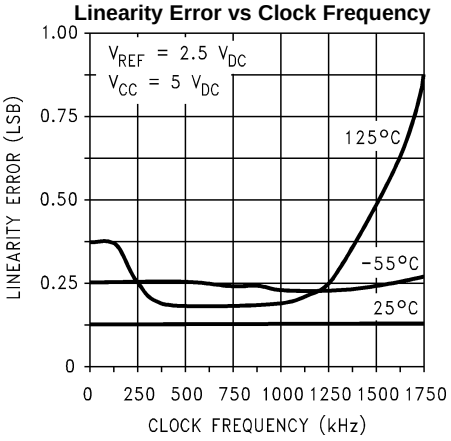


**Figure 6.**

**Power Supply Current vs Temperature (ADC08138, ADC08134)**

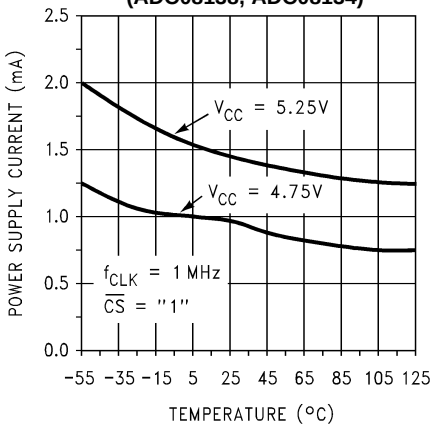


**Figure 7.**

**Output Current vs Temperature**

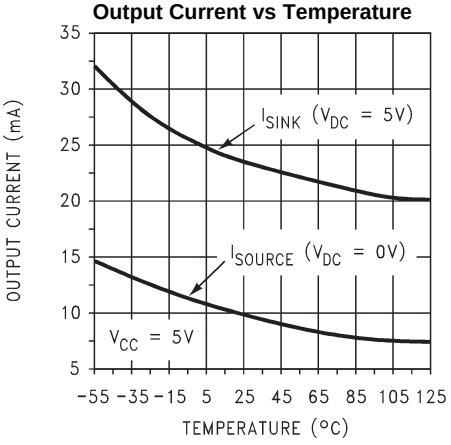


**Figure 8.**

**Power Supply Current vs Clock Frequency**

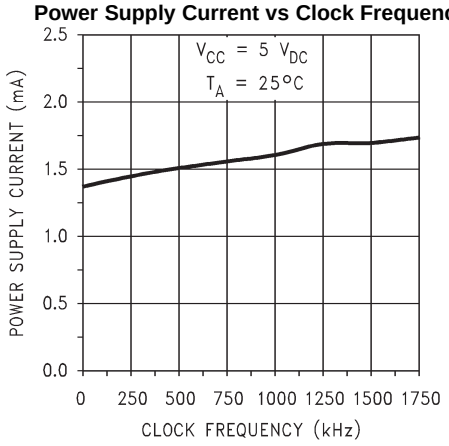


**Figure 9.** (2)

(1) For ADC08131 add $I_{REF}$

(2) For the ADC08131 $V_{REF}$IN is internally tied to the on chip 2.5V band-gap reference output; therefore, the supply current is larger because it includes the reference current (700 µA typical, 2 mA maximum).


Copyright © 1999–2013, Texas Instruments Incorporated

## Typical Reference Performance Characteristics

**Load Regulation (1)**

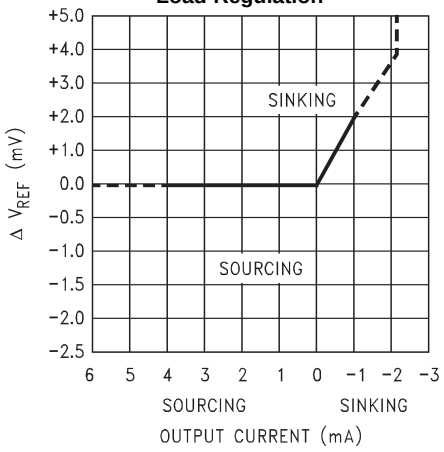


**Figure 10.**

**Line Regulation (3 Typical Parts)**

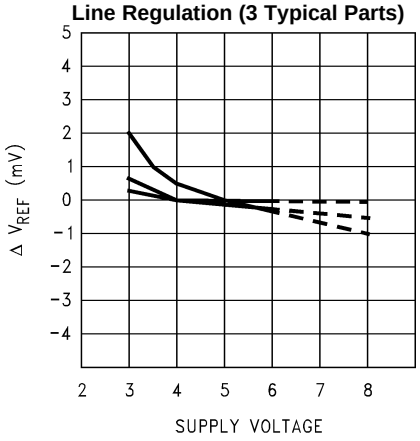


**Figure 11.**

**Output Drift vs Temperature (3 Typical Parts)**

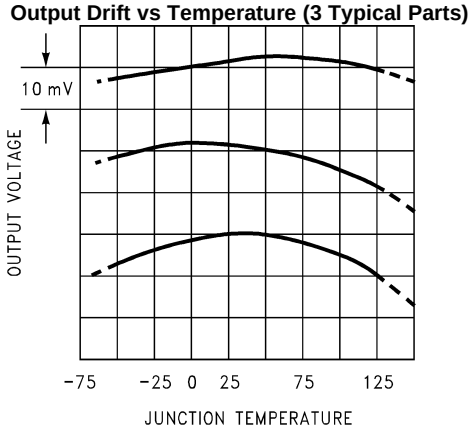


**Figure 12.**

**Available Output Current vs Supply Voltage**

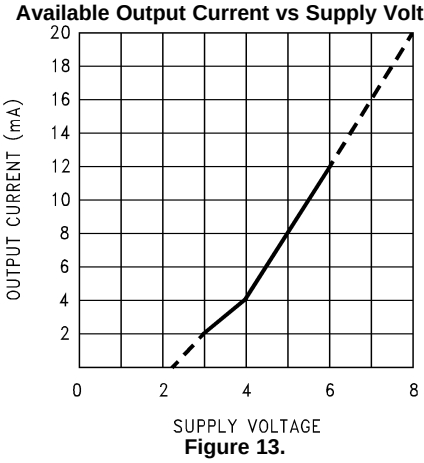


**Figure 13.**

(1) Load regulation test conditions and specifications for the ADC08131 differ from those of the ADC08134 and ADC08138 because the ADC08131 has the on-board reference as a permanent load.

Copyright © 1999–2013, Texas Instruments Incorporated

## TRI-STATE Test Circuits and Waveforms

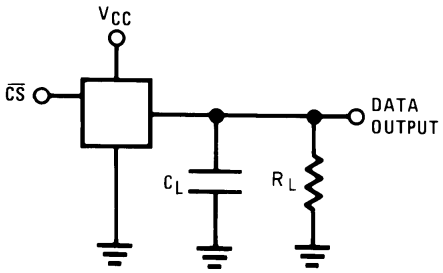


**Figure 14. $t_{1H}$**

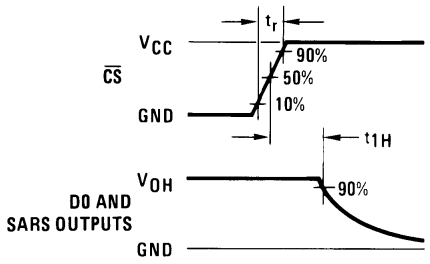


**Figure 15. $t_{1H}$**

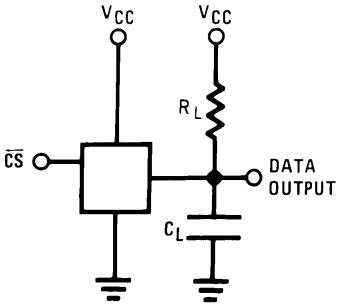


**Figure 16. $t_{0H}$**

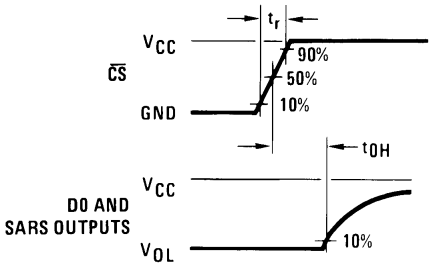


**Figure 17. $t_{0H}$**

## Timing Diagrams

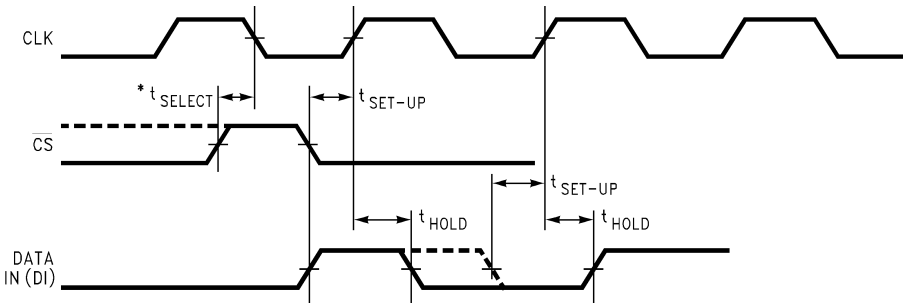


*To reset these devices, CLK and $\overline{CS}$ must be simultaneously high for a period of $t_{SELECT}$ or greater. Otherwise these devices are compatible with industry standards ADC0831/4/8.

**Figure 18. Data Input Timing**

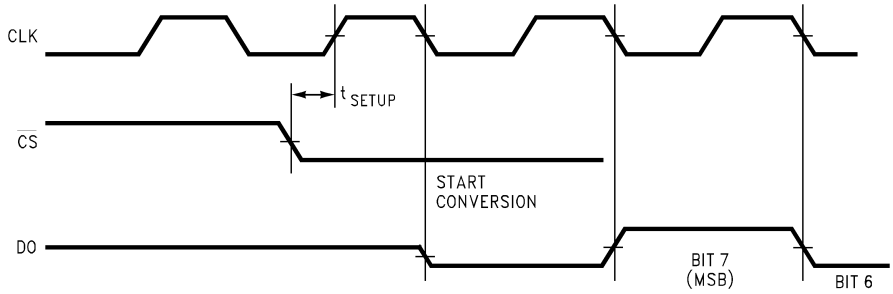


**Figure 19. Data Output Timing**


Copyright © 1999–2013, Texas Instruments Incorporated

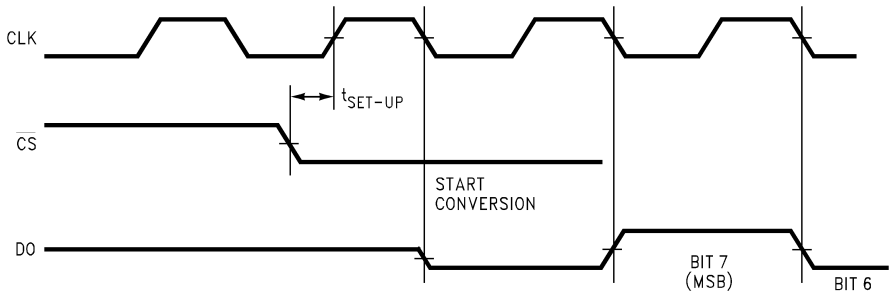


**Figure 20. ADC08131 Start Conversion Timing**

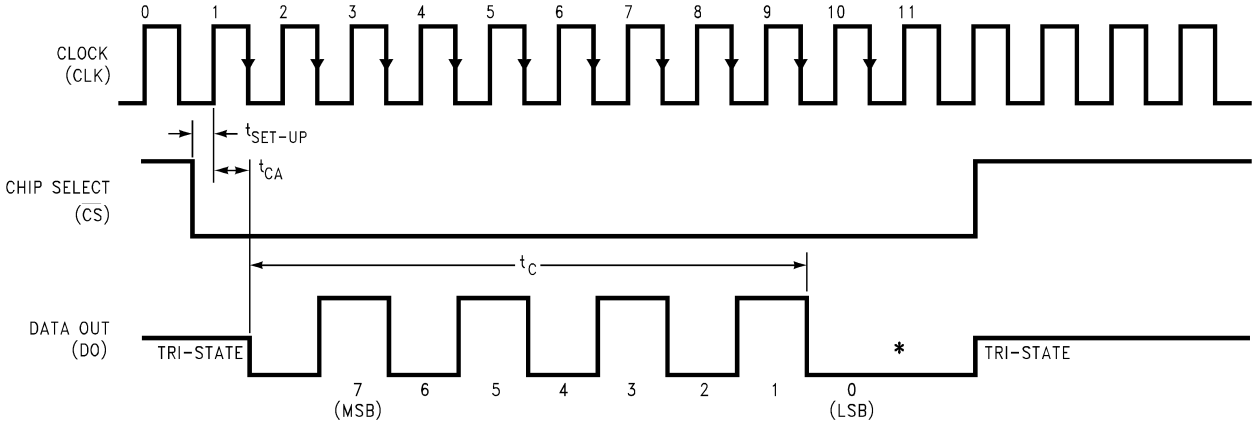


*LSB first output not available on ADC08131.
LSB information is maintained for remainder of clock periods until $\overline{CS}$ goes high.

**Figure 21. ADC08131 Timing**

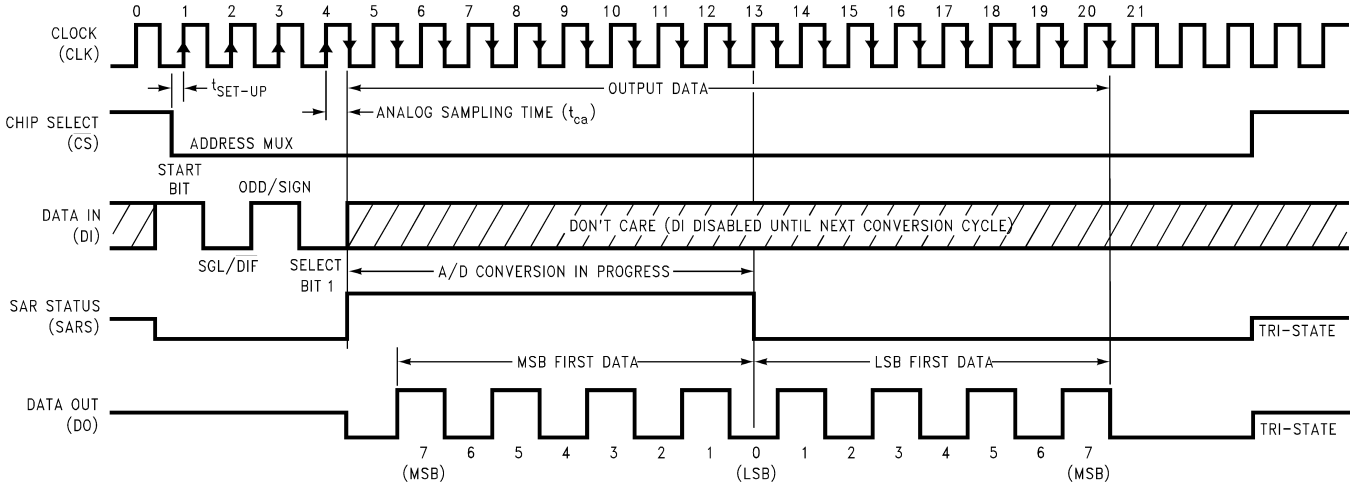


**Figure 22. ADC08134 Timing**

Copyright © 1999–2013, Texas Instruments Incorporated

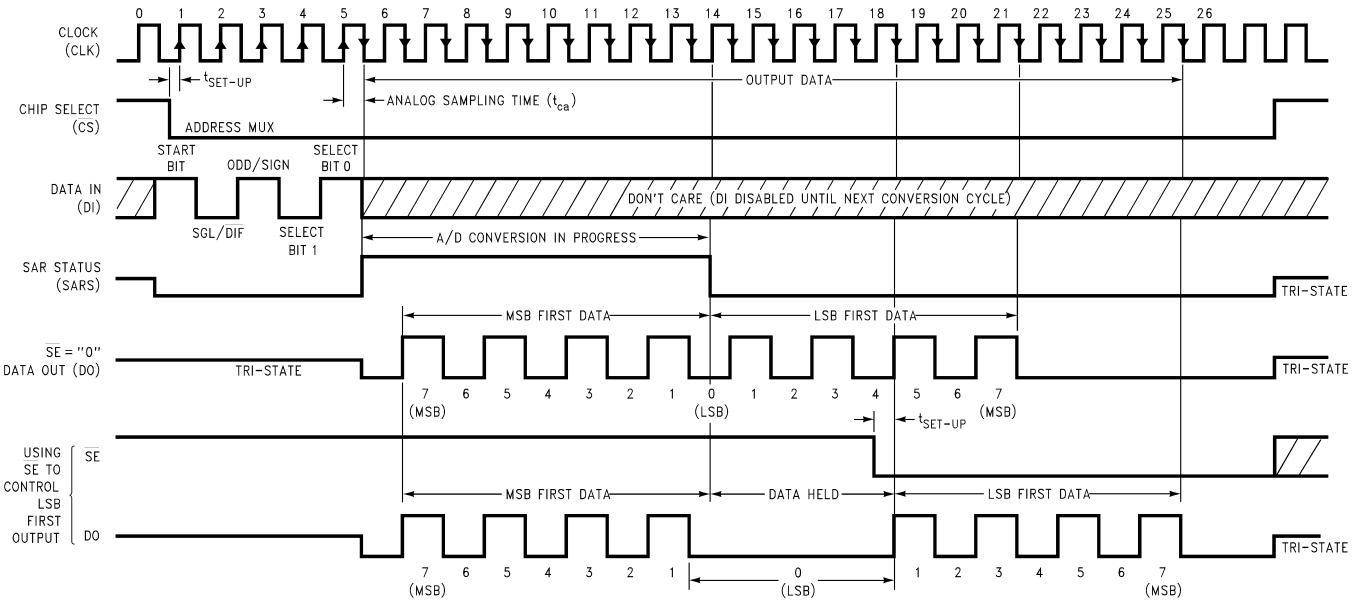


*Make sure clock edge #18 clocks in the LSB before $\overline{SE}$ is taken low

**Figure 23. ADC08138 Timing**


Copyright © 1999–2013, Texas Instruments Incorporated

## ADC08138 Functional Block Diagram

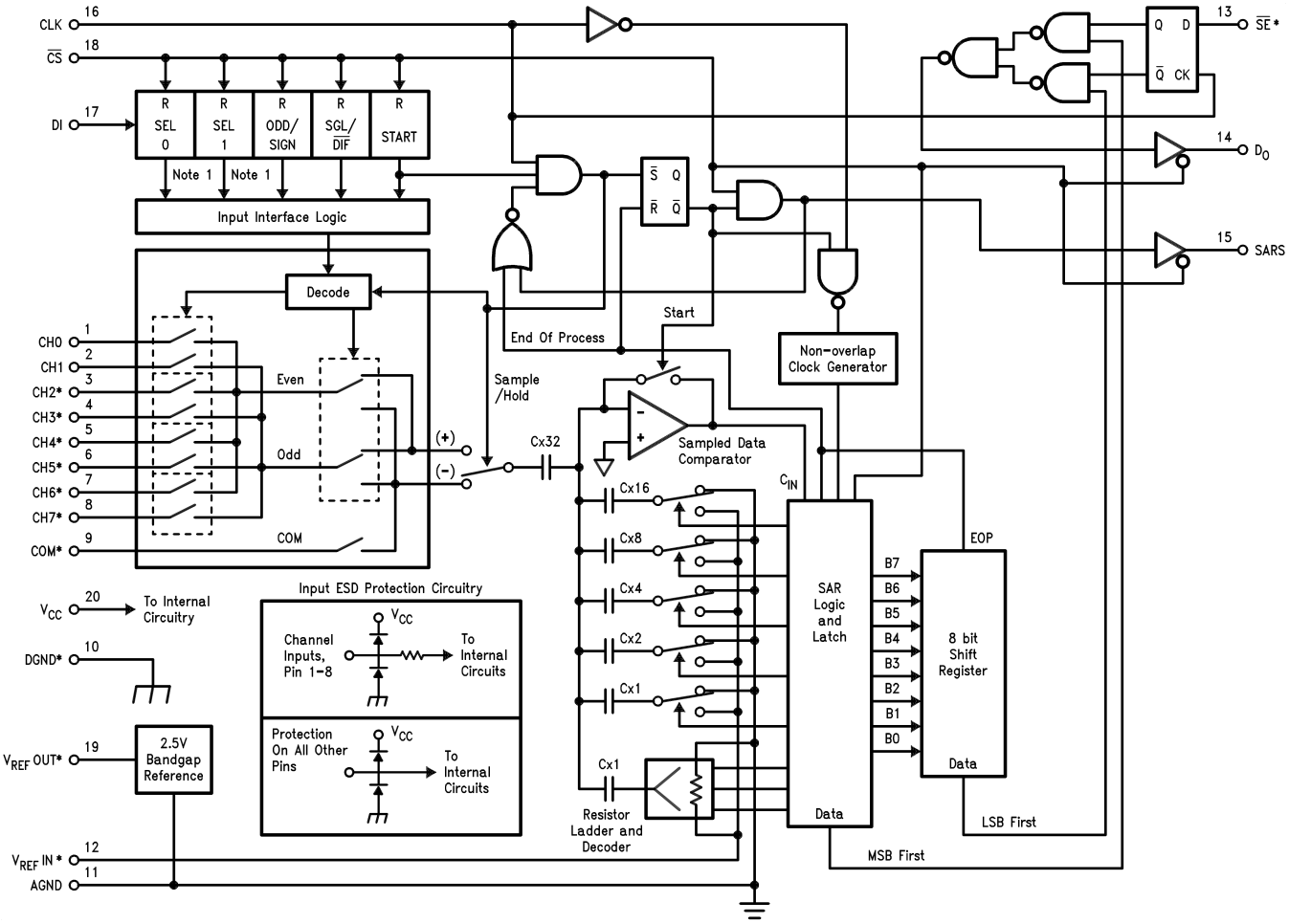


*Some of these functions/pins are not available with other options.

For the ADC08134, the “SEL 1” Flip-Flop is bypassed. For the ADC08131, $V_{REFOUT}$ and $V_{REFIN}$ are internally tied together.

Copyright © 1999–2013, Texas Instruments Incorporated

## Functional Description

### MULTIPLEXER ADDRESSING

The design of these converters utilizes a comparator structure with built-in sample-and-hold which provides for a differential analog input to be converted by a successive approximation routine.

The actual voltage converted is always the difference between an assigned "+" input terminal and a "−" input terminal. The polarity of each input terminal of the pair indicates which line the converter expects to be the most positive. If the assigned "+" input voltage is less than the "−" input voltage the converter responds with an all zeros output code.

A unique input multiplexing scheme has been utilized to provide multiple analog channels with software-configurable single-ended, differential, or pseudo-differential (which will convert the difference between the voltage at any analog input and a common terminal) operation. The analog signal conditioning required in transducer-based data acquisition systems is significantly simplified with this type of input flexibility. One converter package can now handle ground referenced inputs and true differential inputs as well as signals with some arbitrary reference voltage.

A particular input configuration is assigned during the MUX addressing sequence, prior to the start of a conversion. The MUX address selects which of the analog inputs are to be enabled and whether this input is single-ended or differential. Differential inputs are restricted to adjacent channel pairs. For example, channel 0 and channel 1 may be selected as a differential pair but channel 0 or 1 cannot act differentially with any other channel. In addition to selecting differential mode the polarity may also be selected. Channel 0 may be selected as the positive input and channel 1 as the negative input or vice versa. This programmability is best illustrated by the MUX addressing codes shown in the following tables for the various product options.

The MUX address is shifted into the converter via the DI line. Because the ADC08131 contains only one differential input channel with a fixed polarity assignment, it does not require addressing.

The common input line (COM) on the ADC08138 can be used as a pseudo-differential input. In this mode the voltage on this pin is treated as the "−" input for any of the other input channels. This voltage does not have to be analog ground; it can be any reference potential which is common to all of the inputs. This feature is most useful in single-supply applications where the analog circuity may be biased up to a potential other than ground and the output signals are all referred to this potential.

**Table 1. Multiplexer/Package Options**

| Part Number | Number of Analog Channels | | Number of Package Pins |
|---|---|---|---|
| | Single-Ended | Differential | |
| ADC08131 | 1 | 1 | 8 |
| ADC08134 | 4 | 2 | 14 |
| ADC08138 | 8 | 4 | 20 |

**Table 2. MUX Addressing: ADC08138**

| Single-Ended MUX Mode | | | | | | | | | | | | | |
|---|---|---|---|---|---|---|---|---|---|---|---|---|---|
| MUX Address | | | | | Analog Single-Ended Channel # | | | | | | | | |
| START | SGL/ $\overline{\text{DIF}}$ | ODD/ SIGN | SELECT | | 0 | 1 | 2 | 3 | 4 | 5 | 6 | 7 | COM |
| | | | 1 | 0 | | | | | | | | | |
| 1 | 1 | 0 | 0 | 0 | + | | | | | | | | − |
| 1 | 1 | 0 | 0 | 1 | | | + | | | | | | − |
| 1 | 1 | 0 | 1 | 0 | | | | | + | | | | − |
| 1 | 1 | 0 | 1 | 1 | | | | | | | + | | − |
| 1 | 1 | 1 | 0 | 0 | | + | | | | | | | − |
| 1 | 1 | 1 | 0 | 1 | | | | + | | | | | − |
| 1 | 1 | 1 | 1 | 0 | | | | | | + | | | − |
| 1 | 1 | 1 | 1 | 1 | | | | | | | | + | − |


Copyright © 1999–2013, Texas Instruments Incorporated

**Table 3. MUX Addressing: ADC08138**

| Differential MUX Mode | | | | | | | | | | | | |
|---|---|---|---|---|---|---|---|---|---|---|---|---|
| MUX Address | | | | | Analog Differential Channel-Pair # | | | | | | | |
| START | SGL/ $\overline{\text{DIF}}$ | ODD/ SIGN | SELECT | | 0 | | 1 | | 2 | | 3 | |
| | | | 1 | 0 | 0 | 1 | 2 | 3 | 4 | 5 | 6 | 7 |
| 1 | 0 | 0 | 0 | 0 | + | − | | | | | | |
| 1 | 0 | 0 | 0 | 1 | | | + | − | | | | |
| 1 | 0 | 0 | 1 | 0 | | | | | + | − | | |
| 1 | 0 | 0 | 1 | 1 | | | | | | | + | − |
| 1 | 0 | 1 | 0 | 0 | − | + | | | | | | |
| 1 | 0 | 1 | 0 | 1 | | | − | + | | | | |
| 1 | 0 | 1 | 1 | 0 | | | | | − | + | | |
| 1 | 0 | 1 | 1 | 1 | | | | | | | − | + |

**Table 4. MUX Addressing: ADC08134(1)**

| Single-Ended MUX Mode | | | | | | | |
|---|---|---|---|---|---|---|---|
| MUX Address | | | | Channel # | | | |
| START | SGL/ $\overline{\text{DIF}}$ | ODD/ SIGN | SELECT 1 | 0 | 1 | 2 | 3 |
| 1 | 1 | 0 | 0 | + | | | |
| 1 | 1 | 0 | 1 | | | + | |
| 1 | 1 | 1 | 0 | | + | | |
| 1 | 1 | 1 | 1 | | | | + |

(1) COM is internally tied to AGND

| Differential MUX Mode | | | | | | | |
|---|---|---|---|---|---|---|---|
| MUX Address | | | | Channel # | | | |
| START | SGL/ $\overline{\text{DIF}}$ | ODD/ SIGN | SELECT 1 | 0 | 1 | 2 | 3 |
| 1 | 0 | 0 | 0 | + | − | | |
| 1 | 0 | 0 | 1 | | | + | − |
| 1 | 0 | 1 | 0 | − | + | | |
| 1 | 0 | 1 | 1 | | | − | + |

Since the input configuration is under software control, it can be modified as required before each conversion. A channel can be treated as a single-ended, ground referenced input for one conversion; then it can be reconfigured as part of a differential channel for another conversion. Figure 24 illustrates the input flexibility which can be achieved.

The analog input voltages for each channel can range from 50 mV below ground to 50 mV above $V_{CC}$ (typically 5V) without degrading conversion accuracy.

Copyright © 1999–2013, Texas Instruments Incorporated

## THE DIGITAL INTERFACE

A most important characteristic of these converters is their serial data link with the controlling processor. Using a serial communication format offers two very significant system improvements; it allows many functions to be included in a small package and it can eliminate the transmission of low level analog signals by locating the converter right at the analog sensor; transmitting highly noise immune digital data back to the host processor.

To understand the operation of these converters it is best to refer to the Timing Diagrams and ADC08138 Functional Block Diagram and to follow a complete conversion sequence. For clarity a separate timing diagram is shown for each device.

1. A conversion is initiated by pulling the $\overline{CS}$ (chip select) line low. This line must be held low for the entire conversion. The converter is now waiting for a start bit and its MUX assignment word.
2. On each rising edge of the clock the status of the data in (DI) line is clocked into the MUX address shift register. The start bit is the first logic “1” that appears on this line (all leading zeros are ignored). Following the start bit the converter expects the next 2 to 4 bits to be the MUX assignment word.
3. When the start bit has been shifted into the start location of the MUX register, the input channel has been assigned and a conversion is about to begin. An interval of ½ clock period is automatically inserted to allow for sampling the analog input. The SARS line goes high at the end of this time to signal that a conversion is now in progress and the DI line is disabled (it no longer accepts data).
4. The data out (DO) line now comes out of TRI-STATE and provides a leading zero.
5. During the conversion the output of the SAR comparator indicates whether the analog input is greater than (high) or less than (low) a series of successive voltages generated internally from a ratioed capacitor array (first 5 bits) and a resistor ladder (last 3 bits). After each comparison the comparator's output is shipped to the DO line on the falling edge of CLK. This data is the result of the conversion being shifted out (with the MSB first) and can be read by the processor immediately.
6. After 8 clock periods the conversion is completed. The SARS line returns low to indicate this ½ clock cycle later.
7. The stored data in the successive approximation register is loaded into an internal shift register. If the programmer prefers the data can be provided in an LSB first format [this makes use of the shift enable ($\overline{SE}$) control line]. On the ADC08138 the $\overline{SE}$ line is brought out and if held high the value of the LSB remains valid on the DO line. When $\overline{SE}$ is forced low the data is clocked out LSB first. On devices which do not include the $\overline{SE}$ control line, the data, LSB first, is automatically shifted out the DO line after the MSB first data stream. The DO line then goes low and stays low until $\overline{CS}$ is returned high. The ADC08131 is an exception in that its data is only output in MSB first format.
8. All internal registers are cleared when the $\overline{CS}$ line is high and the $t_{SELECT}$ requirement is met. See Figure 18. If another conversion is desired $\overline{CS}$ must make a high to low transition followed by address information.


Copyright © 1999–2013, Texas Instruments Incorporated

The DI and DO lines can be tied together and controlled through a bidirectional processor I/O bit with one wire. This is possible because the DI input is only “looked-at” during the MUX addressing interval while the DO line is still in a high impedance state.

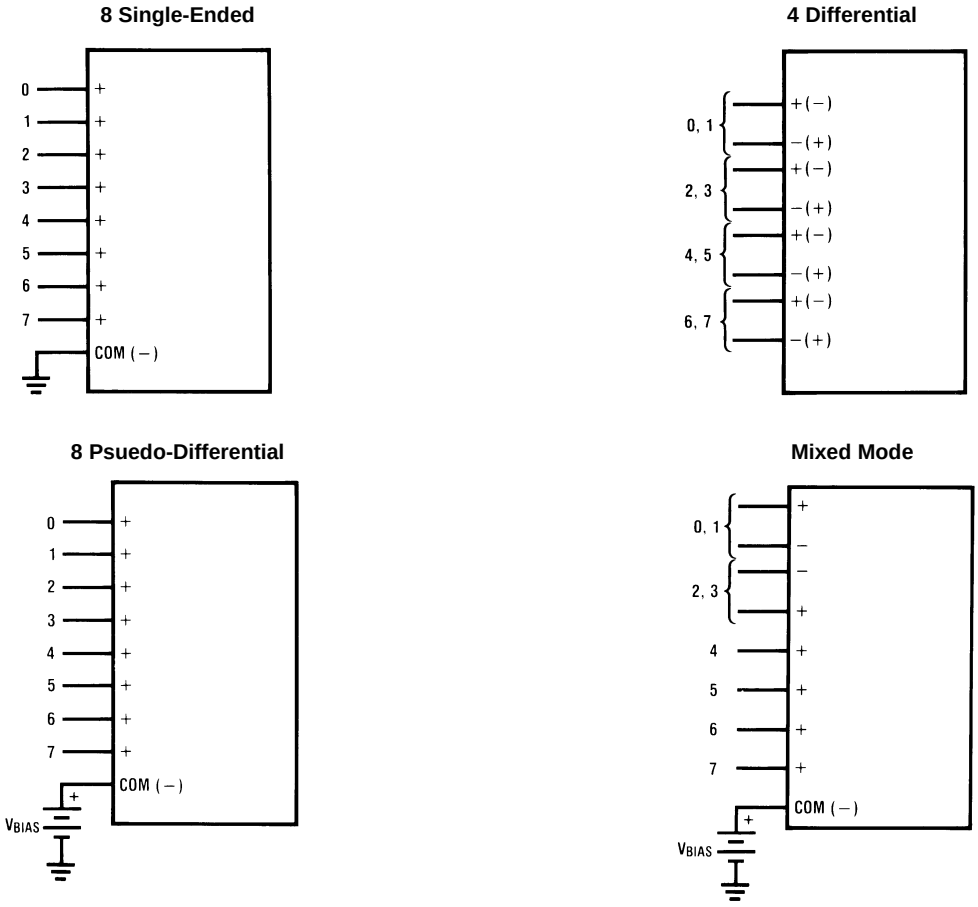


**Figure 24. Analog Input Multiplexer Options for the ADC08138**

## REFERENCE CONSIDERATIONS

The $V_{REF}$IN pin on these converters is the top of a resistor divider string and capacitor array used for the successive approximation conversion. The voltage applied to this reference input defines the voltage span of the analog input (the difference between $V_{IN(MAX)}$ and $V_{IN(MIN)}$ over which the 256 possible output codes apply). The reference source must be capable of driving the reference input resistance, which can be as low as 1.3 kΩ.

For absolute accuracy, where the analog input varies between specific voltage limits, the reference input must be biased with a stable voltage source. The ADC08134 and the ADC08138 provide the output of a 2.5V band-gap reference at $V_{REF}$OUT. This voltage does not vary appreciably with temperature, supply voltage, or load current (see Reference Timing under Electrical Characteristics) and can be tied directly to $V_{REF}$IN for an analog input span of 0V to 2.5V. This output can also be used to bias external circuits and can therefore be used as the reference in ratiometric applications. Bypassing $V_{REF}$OUT with a 100 µF capacitor is recommended.

For the ADC08131, the output of the on-board reference is internally tied to the reference input. Consequently, the analog input span for this device is set at 0V to 2.5V. The pin $V_{REF}$C is provided for bypassing purposes and biasing external circuits as suggested above.

The maximum value of the reference is limited to the $V_{CC}$ supply voltage. The minimum value, however, can be quite small (see Typical Converter Performance Characteristics) to allow direct conversions of transducer outputs providing less than a 5V output span. Particular care must be taken with regard to noise pickup, circuit layout and system error voltage sources when operating with a reduced span due to the increased sensitivity of the converter (1 LSB equals $V_{REF}$/256).

Copyright © 1999–2013, Texas Instruments Incorporated

### Reference Examples

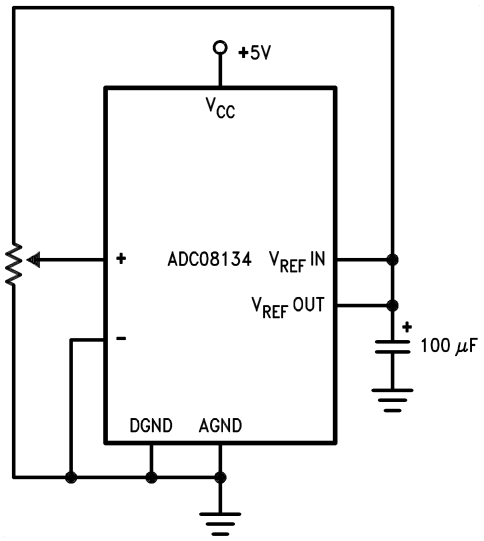


Figure 25. Ratiometric

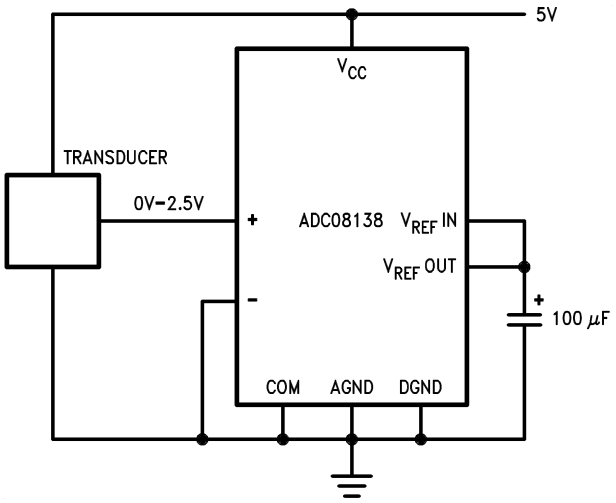


Figure 26. Absolute

## THE ANALOG INPUTS

The most important feature of these converters is that they can be located right at the analog signal source and through just a few wires can communicate with a controlling processor with a highly noise immune serial bit stream. This in itself greatly minimizes circuitry to maintain analog signal accuracy which otherwise is most susceptible to noise pickup. However, a few words are in order with regard to the analog inputs should the input be noisy to begin with or possibly riding on a large common-mode voltage.

The differential input of these converters actually reduces the effects of common-mode input noise, a signal common to both selected "+" and "−" inputs for a conversion (60 Hz is most typical). The time interval between sampling the "+" input and then the "−" input is ½ of a clock period. The change in the common-mode voltage during this short time interval can cause conversion errors. For a sinusoidal common-mode signal this error is:

$$V_{error}(max) = V_{PEAK}(2\pi f_{CM}) \left(\frac{0.5}{f_{CLK}}\right) \quad (1)$$

where

- $f_{CM}$ is the frequency of the common-mode signal
- $V_{PEAK}$ is its peak voltage value
- $f_{CLK}$ is the A/D clock frequency

For a 60Hz common-mode signal to generate a ¼ LSB error (≈5 mV) with the converter running at 250kHz, its peak value would have to be 6.63V which would be larger than allowed as it exceeds the maximum analog input limits.

Source resistance limitation is important with regard to the DC leakage currents of the input multiplexer. While operating near or at maximum speed bypass capacitors should not be used if the source resistance is greater than 1kΩ. The worst-case leakage current of ±1µA over temperature will create a 1mV input error with a 1kΩ source resistance. An op amp RC active low pass filter can provide both impedance buffering and noise filtering should a high impedance signal source be required.


Copyright © 1999–2013, Texas Instruments Incorporated

## OPTIONAL ADJUSTMENTS

### Zero Error

The zero of the A/D does not require adjustment. If the minimum analog input voltage value, $V_{IN(MIN)}$, is not ground a zero offset can be done. The converter can be made to output 0000 0000 digital code for this minimum input voltage by biasing any $V_{IN}$ (−) input at this $V_{IN(MIN)}$ value. This utilizes the differential mode operation of the A/D.

The zero error of the A/D converter relates to the location of the first riser of the transfer function and can be measured by grounding the $V_{IN}$ (−) input and applying a small magnitude positive voltage to the $V_{IN}$ (+) input. Zero error is the difference between the actual DC input voltage which is necessary to just cause an output digital code transition from 0000 0000 to 0000 0001 and the ideal ½ LSB value (½ LSB = 9.8mV for $V_{REF}$ = 5.000$V_{DC}$).

### Full Scale

A full-scale adjustment can be made by applying a differential input voltage which is 1½ LSB down from the desired analog full-scale voltage range and then adjusting the magnitude of the $V_{REF}$IN input for a digital output code which is just changing from 1111 1110 to 1111 1111 (See Figure 31). This is possible only with the ADC08134 and ADC08138. (The reference is internally connected to $V_{REF}$IN of the ADC08131).

### Adjusting for an Arbitrary Analog Input Voltage Range

If the analog zero voltage of the A/D is shifted away from ground (for example, to accommodate an analog input signal which does not go to ground), this new zero reference should be properly adjusted first. A $V_{IN}$ (+) voltage which equals this desired zero reference plus ½ LSB (where the LSB is calculated for the desired analog span, using 1 LSB = analog span/256) is applied to selected "+" input and the zero reference voltage at the corresponding "−" input should then be adjusted to just obtain the $00_{HEX}$ to $01_{HEX}$ code transition.

The full-scale adjustment should be made [with the proper $V_{IN}$ (−) voltage applied] by forcing a voltage to the $V_{IN}$ (+) input which is given by:

$$V_{IN}(+)\ \text{fs adj} = V_{MAX} - 1.5\left[\frac{(V_{MAX} - V_{MIN})}{256}\right] \quad (2)$$

where

- $V_{MAX}$ = the high end of the analog input range
- $V_{MIN}$ = the low end (the offset zero) of the analog range.

(Both are ground referenced.)

The $V_{REF}$IN (or $V_{CC}$) voltage is then adjusted to provide a code change from $FE_{HEX}$ to $FF_{HEX}$. This completes the adjustment procedure.

Copyright © 1999–2013, Texas Instruments Incorporated

## APPLICATIONS

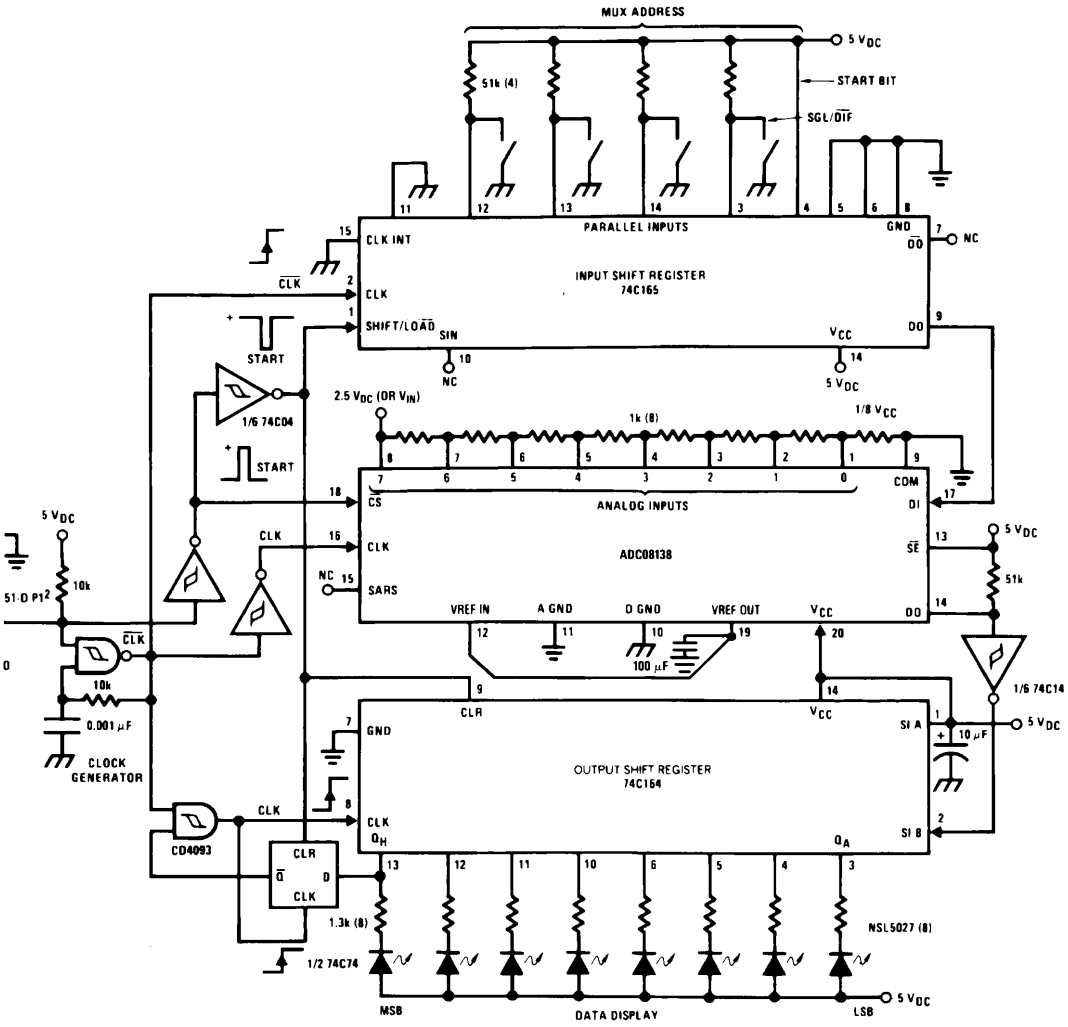


*Pinouts shown for ADC08138.
For all other products tie to pin functions as shown.

**Figure 27. A "Stand-Alone" Hook-Up for ADC08138 Evaluation**

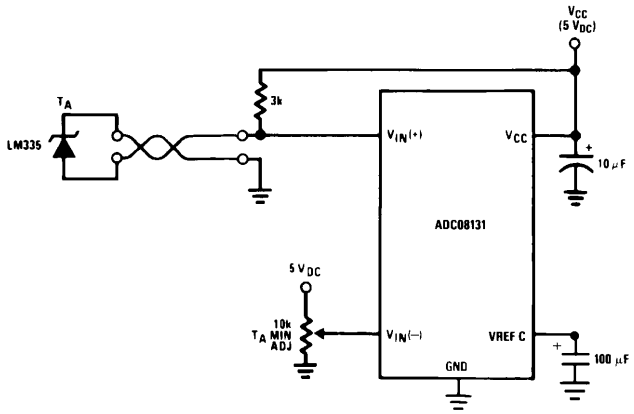


**Figure 28. Low-Cost Remote Temperature Sensor**


Copyright © 1999–2013, Texas Instruments Incorporated

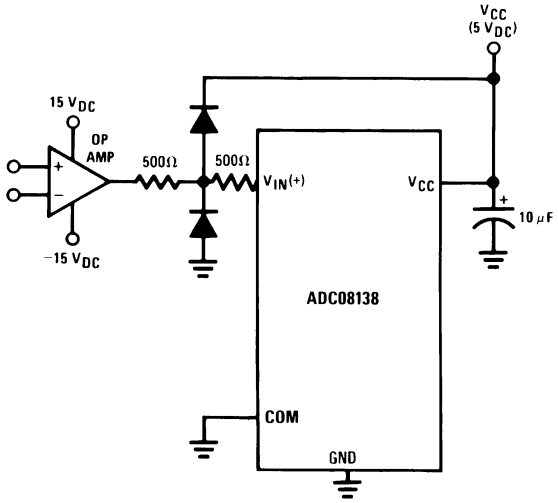


Diodes are 1N914

**Figure 29. Protecting the Input**

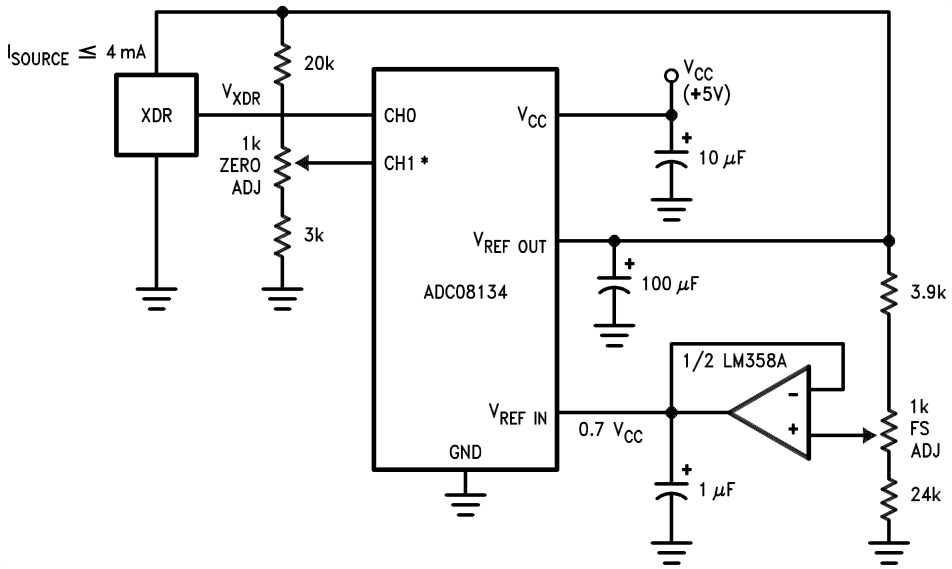


*$V_{IN}(-) = 0.15\ V_{REF}$
15% of $V_{REF} \leq V_{XDR} \leq 85\%$ of $V_{REF}$

**Figure 30. Operating with Ratiometric Transducers**

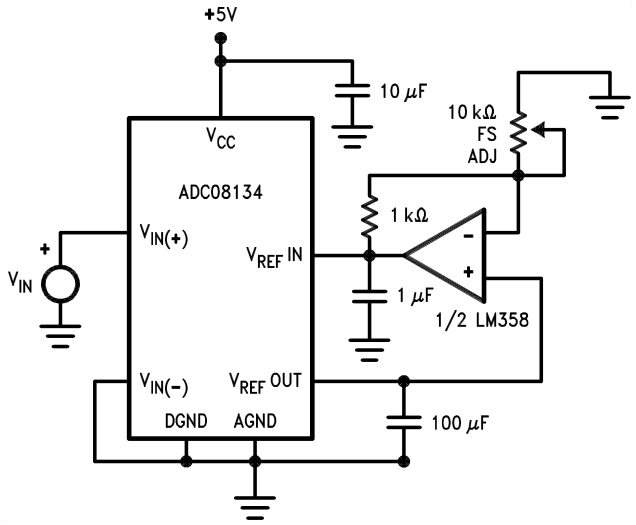


**Figure 31. Span Adjust; 0V ≤ $V_{IN}$ ≤ 3V**

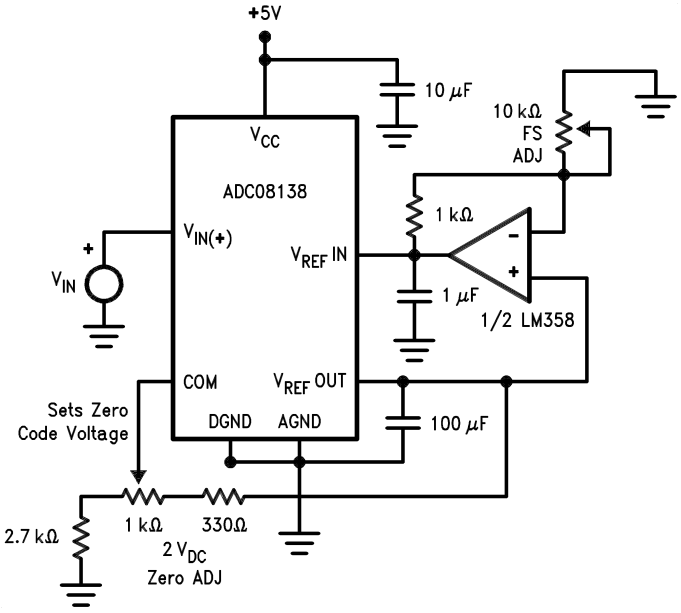


**Figure 32. Zero-Shift and Span Adjust: 2V ≤ $V_{IN}$ ≤ 5V**


Copyright © 1999–2013, Texas Instruments Incorporated

## REVISION HISTORY

| Changes from Revision C (April 2013) to Revision D | Page |
|---|---|
| • Changed layout of National Data Sheet to TI format | 19 |

## IMPORTANT NOTICE

Texas Instruments Incorporated and its subsidiaries (TI) reserve the right to make corrections, enhancements, improvements and other changes to its semiconductor products and services per JESD46, latest issue, and to discontinue any product or service per JESD48, latest issue. Buyers should obtain the latest relevant information before placing orders and should verify that such information is current and complete. All semiconductor products (also referred to herein as “components”) are sold subject to TI’s terms and conditions of sale supplied at the time of order acknowledgment.

TI warrants performance of its components to the specifications applicable at the time of sale, in accordance with the warranty in TI’s terms and conditions of sale of semiconductor products. Testing and other quality control techniques are used to the extent TI deems necessary to support this warranty. Except where mandated by applicable law, testing of all parameters of each component is not necessarily performed.

TI assumes no liability for applications assistance or the design of Buyers’ products. Buyers are responsible for their products and applications using TI components. To minimize the risks associated with Buyers’ products and applications, Buyers should provide adequate design and operating safeguards.

TI does not warrant or represent that any license, either express or implied, is granted under any patent right, copyright, mask work right, or other intellectual property right relating to any combination, machine, or process in which TI components or services are used. Information published by TI regarding third-party products or services does not constitute a license to use such products or services or a warranty or endorsement thereof. Use of such information may require a license from a third party under the patents or other intellectual property of the third party, or a license from TI under the patents or other intellectual property of TI.

Reproduction of significant portions of TI information in TI data books or data sheets is permissible only if reproduction is without alteration and is accompanied by all associated warranties, conditions, limitations, and notices. TI is not responsible or liable for such altered documentation. Information of third parties may be subject to additional restrictions.

Resale of TI components or services with statements different from or beyond the parameters stated by TI for that component or service voids all express and any implied warranties for the associated TI component or service and is an unfair and deceptive business practice. TI is not responsible or liable for any such statements.

Buyer acknowledges and agrees that it is solely responsible for compliance with all legal, regulatory and safety-related requirements concerning its products, and any use of TI components in its applications, notwithstanding any applications-related information or support that may be provided by TI. Buyer represents and agrees that it has all the necessary expertise to create and implement safeguards which anticipate dangerous consequences of failures, monitor failures and their consequences, lessen the likelihood of failures that might cause harm and take appropriate remedial actions. Buyer will fully indemnify TI and its representatives against any damages arising out of the use of any TI components in safety-critical applications.

In some cases, TI components may be promoted specifically to facilitate safety-related applications. With such components, TI’s goal is to help enable customers to design and create their own end-product solutions that meet applicable functional safety standards and requirements. Nonetheless, such components are subject to these terms.

No TI components are authorized for use in FDA Class III (or similar life-critical medical equipment) unless authorized officers of the parties have executed a special agreement specifically governing such use.

Only those TI components which TI has specifically designated as military grade or “enhanced plastic” are designed and intended for use in military/aerospace applications or environments. Buyer acknowledges and agrees that any military or aerospace use of TI components which have ***not*** been so designated is solely at the Buyer's risk, and that Buyer is solely responsible for compliance with all legal and regulatory requirements in connection with such use.

TI has specifically designated certain components as meeting ISO/TS16949 requirements, mainly for automotive use. In any case of use of non-designated products, TI will not be responsible for any failure to meet ISO/TS16949.

| **Products** | | **Applications** | |
|---|---|---|---|
| Audio | www.ti.com/audio | Automotive and Transportation | www.ti.com/automotive |
| Amplifiers | amplifier.ti.com | Communications and Telecom | www.ti.com/communications |
| Data Converters | dataconverter.ti.com | Computers and Peripherals | www.ti.com/computers |
| DLP® Products | www.dlp.com | Consumer Electronics | www.ti.com/consumer-apps |
| DSP | dsp.ti.com | Energy and Lighting | www.ti.com/energy |
| Clocks and Timers | www.ti.com/clocks | Industrial | www.ti.com/industrial |
| Interface | interface.ti.com | Medical | www.ti.com/medical |
| Logic | logic.ti.com | Security | www.ti.com/security |
| Power Mgmt | power.ti.com | Space, Avionics and Defense | www.ti.com/space-avionics-defense |
| Microcontrollers | microcontroller.ti.com | Video and Imaging | www.ti.com/video |
| RFID | www.ti-rfid.com | | |
| OMAP Applications Processors | www.ti.com/omap | **TI E2E Community** | e2e.ti.com |
| Wireless Connectivity | www.ti.com/wirelessconnectivity | | |

Mailing Address: Texas Instruments, Post Office Box 655303, Dallas, Texas 75265
Copyright © 2013, Texas Instruments Incorporated