400 MSPS 14-Bit, 1.8 V CMOS Direct Digital Synthesizer

AD9952

FEATURES

400 MSPS internal clock speed
Integrated 14-bit DAC
32-bit tuning word
Phase noise ≤ −120 dBc/Hz @ 1 kHz offset (DAC output)
Excellent dynamic performance
>80 dB SFDR @ 160 MHz (±100 kHz offset) A_{OUT}
Serial I/O control
1.8 V power supply
Software and hardware controlled power-down
48-lead TQFP/EP package
Support for 5 V input levels on most digital inputs
PLL REFCLK multiplier (4× to 20×)
Internal oscillator, can be driven by a single crystal
Phase modulation capability
Multichip synchronization
High speed comparator (200 MHz toggle rate)

APPLICATIONS

Agile LO frequency synthesis
Programmable clock generators
Test and measurement equipment
Acousto-optic device drivers

FUNCTIONAL BLOCK DIAGRAM

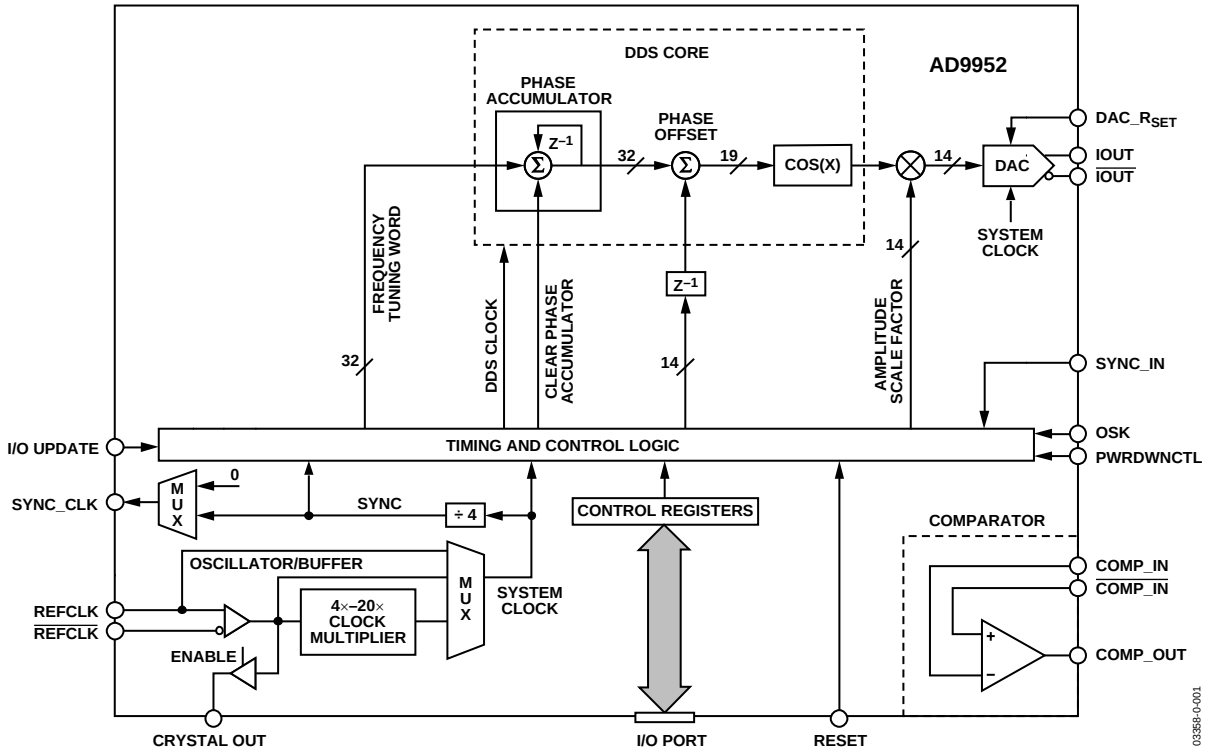

Figure 1.

Rev. 0

Information furnished by Analog Devices is believed to be accurate and reliable. However, no responsibility is assumed by Analog Devices for its use, nor for any infringements of patents or other rights of third parties that may result from its use. Specifications subject to change without notice. No license is granted by implication or otherwise under any patent or patent rights of Analog Devices. Trademarks and registered trademarks are the property of their respective owners.

One Technology Way, P.O. Box 9106, Norwood, MA 02062-9106, U.S.A.
Tel: 781.329.4700 **www.analog.com**
Fax: 781.326.8703 **© 2003 Analog Devices, Inc. All rights reserved.**

TABLE OF CONTENTS

General Description 3
AD9952—Electrical Specifications 4
Absolute Maximum Ratings 7
Pin Configuration 8
Pin Function Descriptions 9
Typical Performance Characteristics 10
Theory of Operation 13
Component Blocks 13
Modes of Operation 18
Programming AD9952 Features 18
Serial Port Operation 21
Instruction Byte 23
Serial Interface Port Pin Description 23
MSB/LSB Transfers 23
Suggested Application Circuits 25
Outline Dimensions 26
ESD Caution 26
Ordering Guide 26

REVISION HISTORY

Revision 0: Initial Version

GENERAL DESCRIPTION

The AD9952 is a direct digital synthesizer (DDS) featuring a 14-bit DAC operating up to 400 MSPS. The AD9952 uses advanced DDS technology, coupled with an internal high speed, high performance DAC to form a digitally programmable, complete high frequency synthesizer capable of generating a frequency-agile analog output sinusoidal waveform at up to 200 MHz. The AD9952 is designed to provide fast frequency hopping and fine tuning resolution (32-bit frequency tuning word). The frequency tuning and control words are loaded into the AD9952 via a serial I/O port.

The AD9952 is specified to operate over the extended industrial temperature range of –40°C to +105°C.

ELECTRICAL SPECIFICATIONS

Table 1. Unless otherwise noted, AVDD, DVDD = 1.8 V ± 5%, DVDD_I/O = 3.3 V ± 5%, R_{SET} = 3.92 kΩ, External Reference Clock Frequency = 20 MHz with REFCLK Multiplier Enabled at 20×. DAC Output Must Be Referenced to AVDD, Not AGND.

Parameter	Temp	Min	Typ	Max	Unit
REF CLOCK INPUT CHARACTERISTICS					
Frequency Range					
REFCLK Multiplier Disabled	FULL	1		400	MHz
REFCLK Multiplier Enabled at 4×	FULL	20		100	MHz
REFCLK Multiplier Enabled at 20×	FULL	4		20	MHz
Input Capacitance	25°C		3		pF
Input Impedance	25°C		1.5		kΩ
Duty Cycle	25°C		50		%
Duty Cycle with REFCLK Multiplier Enabled	25°C	35		65	%
REFCLK Input Power[1]	FULL	−15	0	+3	dBm
DAC OUTPUT CHARACTERISTICS					
Resolution			14		Bits
Full-Scale Output Current	25°C	5	10	15	mA
Gain Error	25°C	−10		+10	%FS
Output Offset	25°C			0.6	µA
Differential Nonlinearity	25°C		1		LSB
Integral Nonlinearity	25°C		2		LSB
Output Capacitance	25°C		5		pF
Residual Phase Noise @ 1 kHz Offset, 40 MHz A_{OUT}					
REFCLK Multiplier Enabled @ 20×	25°C		−105		dBc/Hz
REFCLK Multiplier Enabled @ 4×	25°C		−115		dBc/Hz
REFCLK Multiplier Disabled	25°C		−132		dBc/Hz
Voltage Compliance Range	25°C	AVDD − 0.5		AVDD + 0.5	V
Wideband SFDR					
1 MHz to 10 MHz Analog Out	25°C		73		dBc
10 MHz to 40 MHz Analog Out	25°C		67		dBc
40 MHz to 80 MHz Analog Out	25°C		62		dBc
80 MHz to 120 MHz Analog Out	25°C		58		dBc
120 MHz to 160 MHz Analog Out	25°C		52		dBc
Narrow-Band SFDR					
40 MHz Analog Out (±1 MHz)	25°C		87		dBc
40 MHz Analog Out (±250 kHz)	25°C		89		dBc
40 MHz Analog Out (±50 kHz)	25°C		91		dBc
40 MHz Analog Out (±10 kHz)	25°C		93		dBc
80 MHz Analog Out (±1 MHz)	25°C		85		dBc
80 MHz Analog Out (±250 kHz)	25°C		87		dBc
80 MHz Analog Out (±50 kHz)	25°C		89		dBc
80 MHz Analog Out (±10 kHz)	25°C		91		dBc
120 MHz Analog Out (±1 MHz)	25°C		83		dBc
120 MHz Analog Out (±250 kHz)	25°C		85		dBc
120 MHz Analog Out (±50 kHz)	25°C		87		dBc
120 MHz Analog Out (±10 kHz)	25°C		89		dBc
160 MHz Analog Out (±1 MHz)	25°C		81		dBc
160 MHz Analog Out (±250 kHz)	25°C		83		dBc
160 MHz Analog Out (±50 kHz)	25°C		85		dBc
160 MHz Analog Out (±10 kHz)	25°C		87		dBc

Parameter	Temp	Min	Typ	Max	Unit
COMPARATOR INPUT CHARACTERISTICS					
Input Capacitance	25°C		3		pF
Input Resistance	25°C		500		kΩ
Input Current	25°C		±12		μA
Hysteresis	25°C	30		45	mA
COMPARATOR OUTPUT CHARACTERISTICS					
Logic 1 Voltage, High Z Load	FULL	1.6			V
Logic 0 Voltage, High Z Load	FULL			0.4	V
Propagation Delay	25°C		3		ns
Output Duty Cycle Error	25°C		±5		%
Rise/Fall Time, 5 pF Load	25°C			1	ns
Toggle Rate, High Z Load	25°C	200			MHz
Output Jitter[2]	25°C			1	ps rms
COMPARATOR NARROW-BAND SFDR					
10 MHz (1 MHz)	25°C		80		dBc
10 MHz (250 kHz)	25°C		85		dBc
10 MHz (50 kHz)	25°C		90		dBc
10 MHz (10 kHz)	25°C		95		dBc
70 MHz (1 MHz)	25°C		80		dBc
70 MHz (250 kHz)	25°C		85		dBc
70 MHz (50 kHz)	25°C		90		dBc
70 MHz (10 kHz)	25°C		95		dBc
110 MHz (1 MHz)	25°C		80		dBc
110 MHz (250 kHz)	25°C		85		dBc
110 MHz (50 kHz)	25°C		90		dBc
110 MHz (10 kHz)	25°C		95		dBc
140 MHz (1 MHz)	25°C		80		dBc
140 MHz (250 kHz)	25°C		85		dBc
140 MHz (50 kHz)	25°C		90		dBc
140 MHz (10 kHz)	25°C		95		dBc
160 MHz (1 MHz)	25°C		80		dBc
160 MHz (250 kHz)	25°C		85		dBc
160 MHz (50 kHz)	25°C		90		dBc
160 MHz (10 kHz)	25°C		95		dBc
CLOCK GENERATOR OUTPUT JITTER[3]					
5 MHz A_{OUT}	25°C		100		ps rms
10 MHz A_{OUT}	25°C		60		ps rms
40 MHz A_{OUT}	25°C		50		ps rms
80 MHz A_{OUT}	25°C		50		ps rms
120 MHz A_{OUT}	25°C		50		ps rms
140 MHz A_{OUT}	25°C		50		ps rms
160 MHz A_{OUT}	25°C		50		ps rms
TIMING CHARACTERISTICS					
Serial Control Bus					
Maximum Frequency	FULL		25		Mbps
Minimum Clock Pulse Width Low	FULL	7			ns
Minimum Clock Pulse Width High	FULL	7			ns
Maximum Clock Rise/Fall Time	FULL		2		ns
Minimum Data Setup Time DVDD_I/O = 3.3 V	FULL	3			ns
Minimum Data Setup Time DVDD_I/O = 1.8 V	FULL	5			ns
Minimum Data Hold Time	FULL	0			ns
Maximum Data Valid Time	FULL		25		ns

Parameter	Temp	Min	Typ	Max	Unit
Wake-Up Time[4]	FULL		1		ms
Minimum Reset Pulse Width High	FULL	5			SYSCLK Cycles[5]
I/O UPDATE to SYNC_CLK Setup Time DVDD_I/O = 3.3 V	FULL	4			ns
I/O UPDATE to SYNC_CLK Setup Time DVDD_I/O = 3.3 V	FULL	6			ns
I/O UPDATE, SYNC_CLK Hold Time	FULL	0			ns
Latency					
I/O UPDATE to Frequency Change Prop Delay	25°C	24			SYSCLK Cycles
I/O UPDATE to Phase Offset Change Prop Delay	25°C	24			SYSCLK Cycles
I/O UPDATE to Amplitude Change Prop Delay	25°C	16			SYSCLK Cycles
CMOS LOGIC INPUTS					
Logic 1 Voltage @ DVDD_I/O (Pin 43) = 1.8 V	25°C	1.25			V
Logic 0 Voltage @ DVDD_I/O (Pin 43) = 1.8 V	25°C			0.6	V
Logic 1 Voltage @ DVDD_I/O (Pin 43) = 3.3 V	25°C	2.2			V
Logic 0 Voltage @ DVDD_I/O (Pin 43) = 3.3 V	25°C			0.8	V
Logic 1 Current	25°C		3	12	µA
Logic 0 Current	25°C			12	µA
Input Capacitance	25°C		2		pF
CMOS LOGIC OUTPUTS (1 mA Load) DVDD_I/O = 1.8 V					
Logic 1 Voltage	25°C	1.35			V
Logic 0 Voltage	25°C			0.4	V
CMOS LOGIC OUTPUTS (1 mA Load) DVDD_I/O = 3.3 V					
Logic 1 Voltage	25°C	2.8			V
Logic 0 Voltage	25°C			0.4	V
POWER CONSUMPTION (AVDD = DVDD = 1.8 V)					
Single-Tone Mode	25°C		162	171	mW
Rapid Power-Down Mode	25°C		150	160	mW
Full-Sleep Mode	25°C		20	27	mW
SYNCHRONIZATION FUNCTION[6]					
Maximum SYNC Clock Rate (DVDD_I/O = 1.8 V)	25°C	62.5			MHz
Maximum SYNC Clock Rate (DVDD_I/O = 3.3 V)	25°C	100			MHz
SYNC_CLK Alignment Resolution[7]	25°C		±1		SYSCLK Cycles

[1] To achieve the best possible phase noise, the largest amplitude clock possible should be used. Reducing the clock input amplitude will reduce the phase noise performance of the device.
[2] Represents the cycle-to-cycle residual jitter from the comparator alone.
[3] Represents the cycle-to-cycle residual jitter from the DDS core driving the comparator.
[4] Wake-up time refers to the recovery from analog power-down modes (see the Power-Down Functions of the AD9952 section). The longest time required is for the reference clock multiplier PLL to relock to the reference. The wake-up time assumes there is no capacitor on DACBP and that the recommended PLL loop filter values are used.
[5] SYSCLK cycle refers to the actual clock frequency used on-chip by the DDS. If the reference clock multiplier is used to multiply the external reference clock frequency, the SYSCLK frequency is the external frequency multiplied by the reference clock multiplication factor. If the reference clock multiplier is not used, the SYSCLK frequency is the same as the external reference clock frequency.
[6] SYNC_CLK = ¼ SYSCLK rate. For SYNC_CLK rates ≥ 50 MHz, the high speed sync enable bit, CFR2<11>, should be set.
[7] This parameter indicates that the digital synchronization feature cannot overcome phase delays (timing skew) between system clock rising edges. If the system clock edges are aligned, the synchronization function should not increase the skew between the two edges.

ABSOLUTE MAXIMUM RATINGS

Table 2.

Parameter	Rating
Maximum Junction Temperature	150°C
DVDD_I/O (Pin 43)	4 V
AVDD, DVDD	2 V
Digital Input Voltage (DVDD_I/O = 3.3 V)	–0.7 V to +5.25 V
Digital Input Voltage (DVDD_I/O = 1.8 V)	–0.7 V to +2.2 V
Digital Output Current	5 mA
Storage Temperature	–65°C to +150°C
Operating Temperature	–40°C to +105°C
Lead Temperature (10 sec Soldering)	300°C
θ_{JA}	38°C/W
θ_{JC}	15°C/W

Stresses above those listed under Absolute Maximum Ratings may cause permanent damage to the device. This is a stress rating only and functional operation of the device at these or any other conditions above those indicated in the operational section of this specification is not implied. Exposure to absolute maximum rating conditions for extended periods may affect device reliability.

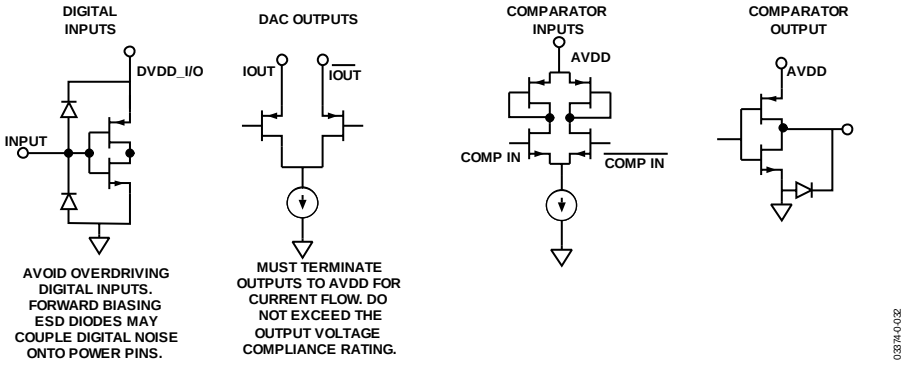

Figure 2. Equivalent Input and Output Circuits

PIN CONFIGURATION

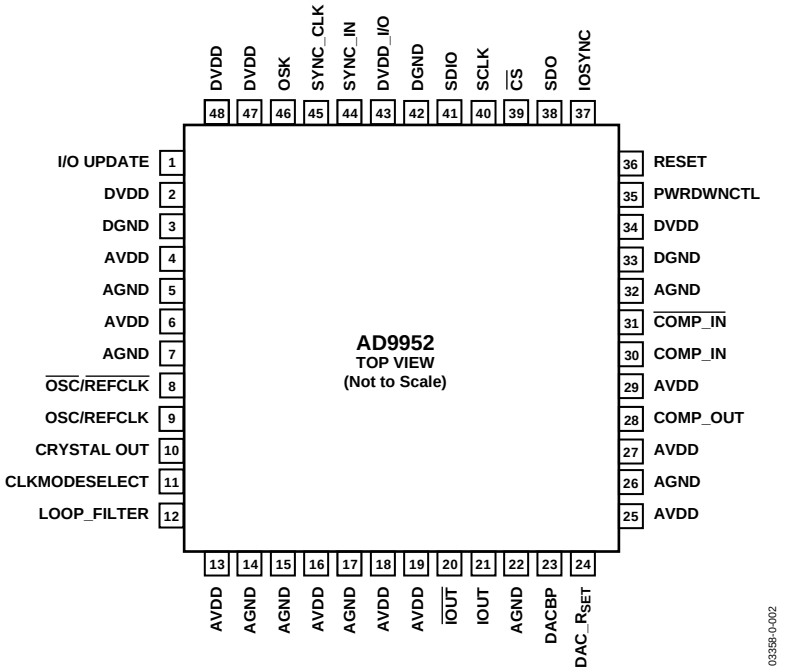

Figure 3. 48-Lead TQFP/EP

Note that the exposed paddle on the bottom of the package forms an electrical connection for the DAC and must be attached to analog ground. Note that Pin 43, DVDD_I/O, can be powered to 1.8 V or 3.3 V; however, the DVDD pins (Pin 2 and Pin 34) can only be powered to 1.8 V.

PIN FUNCTION DESCRIPTIONS

Table 3. 48-Lead TQFP/EP

Pin No.	Mnemonic	I/O	Description
1	I/O UPDATE	I	The rising edge transfers the contents of the internal buffer memory to the I/O registers. This pin must be set up and held around the SYNC_CLK output signal.
2, 34	DVDD	I	Digital Power Supply Pins (1.8 V).
3, 33, 42, 47, 48	DGND	I	Digital Power Ground Pins.
4, 6, 13, 16, 18, 19, 25, 27, 29	AVDD	I	Analog Power Supply Pins (1.8 V).
5, 7, 14, 15, 17, 22, 26, 32	AGND	I	Analog Power Ground Pins.
8	$\overline{\text{OSC}}$/$\overline{\text{REFCLK}}$	I	Complementary Reference Clock/Oscillator Input. When the REFCLK port is operated in single-ended mode, $\overline{\text{REFCLK}}$ should be decoupled to AVDD with a 0.1 µF capacitor.
9	OSC/REFCLK	I	Reference Clock/Oscillator Input. See Clock Input section for details on the OSCILLATOR/REFCLK operation.
10	CRYSTAL OUT	O	Output of the Oscillator Section.
11	CLKMODESELECT	I	Control Pin for the Oscillator Section. When high, the oscillator section is enabled. When low, the oscillator section is bypassed.
12	LOOP_FILTER	I	This pin provides the connection for the external zero compensation network of the REFCLK multiplier's PLL loop filter. The network consists of a 1 kΩ resistor in series with a 0.1 µF capacitor tied to AVDD.
20	$\overline{\text{IOUT}}$	O	Complementary DAC Output. Should be biased through a resistor to AVDD, not AGND.
21	IOUT	O	DAC Output. Should be biased through a resistor to AVDD, not AGND.
23	DACBP	I	DAC Biasline Decoupling Pin.
24	DAC_R_{SET}	I	A resistor (3.92 kΩ nominal) connected from AGND to DAC_R_{SET} establishes the reference current for the DAC.
28	COMP_OUT	O	Comparator Output.
30	COMP_IN	I	Compator Input.
31	$\overline{\text{COMP_IN}}$	I	Compartor Complementary Input
35	PWRDWNCTL	I	Input Pin Used as an External Power-Down Control (see Table 8 for details).
36	RESET	I	Active High Hardware Reset Pin. Assertion of the RESET pin forces the AD9952 to the initial state, as described in the I/O port register map.
37	IOSYNC	I	Asynchronous Active High Reset of the Serial Port Controller. When high, the current I/O operation is immediately terminated, enabling a new I/O operation to commence once IOSYNC is returned low. If unused, ground this pin; do not allow this pin to float.
38	SDO	O	When operating the I/O port as a 3-wire serial port, this pin serves as the serial data output. When operated as a 2-wire serial port, this pin is unused and can be left unconnected.
39	$\overline{\text{CS}}$	I	This pin functions as an active low chip select that allows multiple devices to share the I/O bus.
40	SCLK	I	This pin functions as the serial data clock for I/O operations.
41	SDIO	I/O	When operating the I/O port as a 3-wire serial port, this pin serves as the serial data input only. When operated as a 2-wire serial port, this pin is the bidirectional serial data pin.
43	DVDD_I/O	I	Digital Power Supply (for I/O Cells Only, 3.3 V).
44	SYNC_IN	I	Input Signal Used to Synchronize Multiple AD9952s. This input is connected to the SYNC_CLK output of a master AD9952.
45	SYNC_CLK	O	Clock Output Pin that Serves as a Synchronizer for External Hardware.
46	OSK	I	Input Pin Used to Control the Direction of the Shaped On-Off Keying Function when Programmed for Operation. OSK is synchronous to the SYNC_CLK pin. When OSK is not programmed, this pin should be tied to DGND.
<49>	AGND	I	The exposed paddle on the bottom of the package is a ground connection for the DAC and must be attached to AGND in any board layout.

TYPICAL PERFORMANCE CHARACTERISTICS

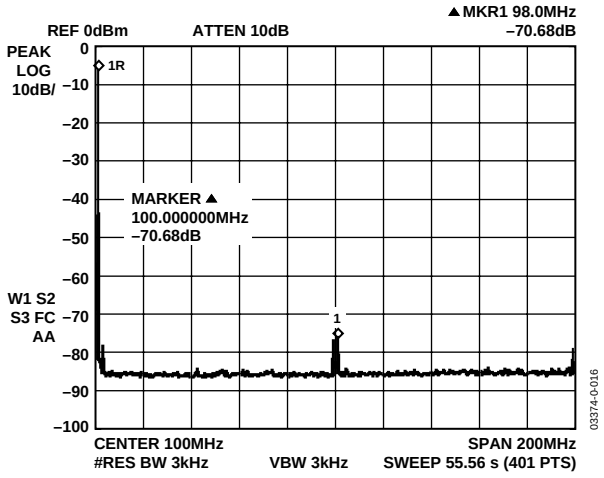

Figure 4. F_{OUT} = 1 MHz FCLK = 400 MSPS, WBSFDR

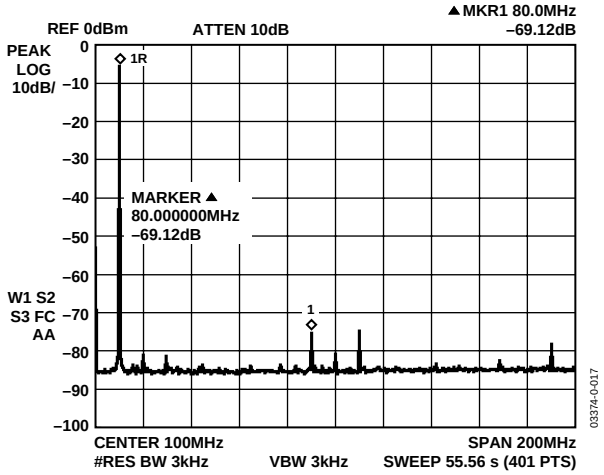

Figure 5. F_{OUT} = 10 MHz, FCLK = 400 MSPS, WBSFDR

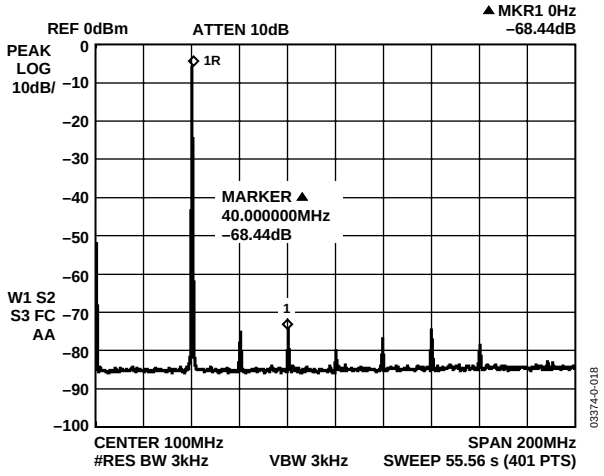

Figure 6. F_{OUT} = 40 MHz, FCLK = 400 MSPS, WBSFDR

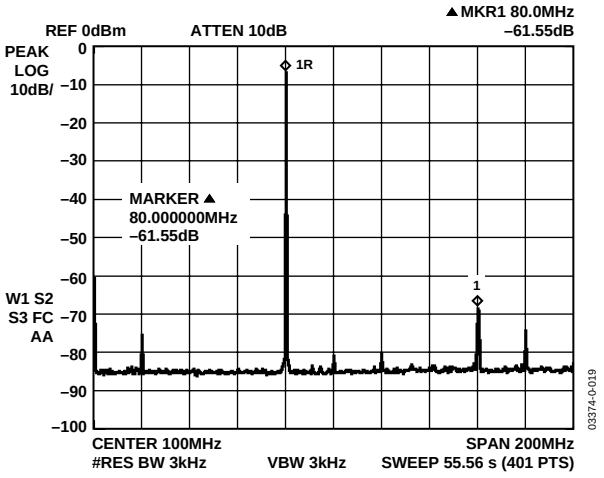

Figure 7. F_{OUT} = 80 MHz FCLK = 400 MSPS, WBSFDR

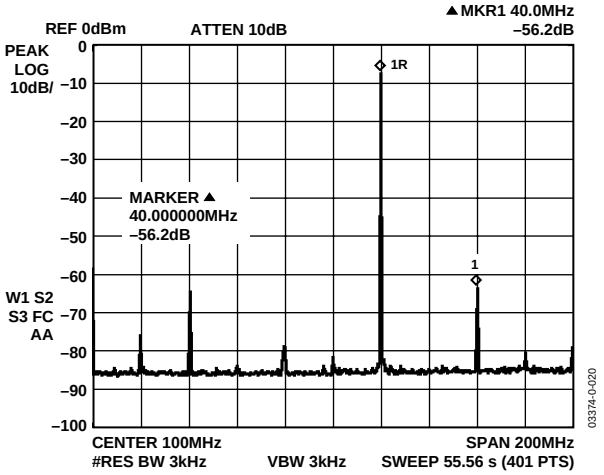

Figure 8. F_{OUT} = 120 MHz, FCLK = 400 MSPS, WBSFDR

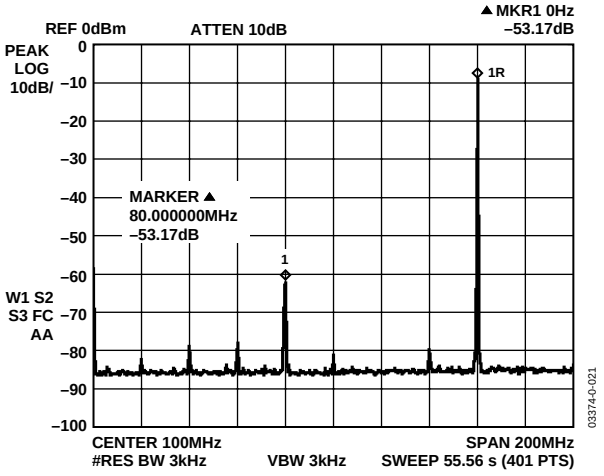

Figure 9. F_{OUT} = 160 MHz, FCLK = 400 MSPS, WBSFDR

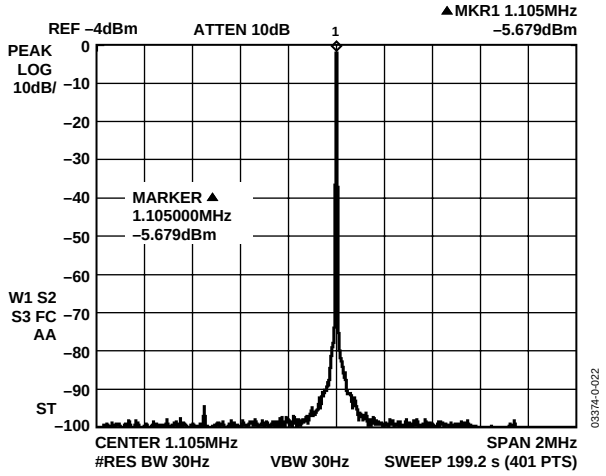

Figure 10. F_{OUT} = 1.1 MHz, FCLK = 400 MSPS, NBSFDR, ±1 MHz

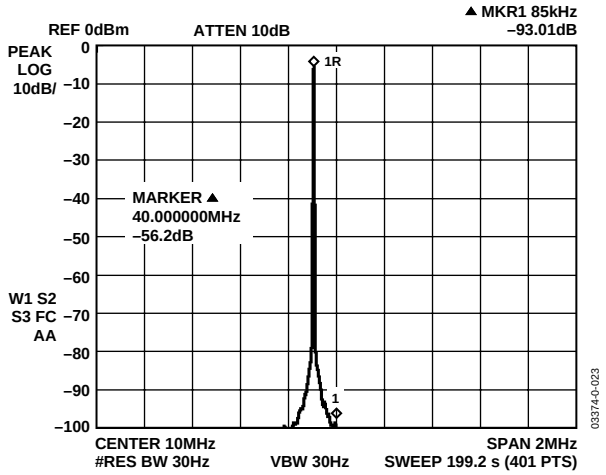

Figure 11. F_{OUT} = 10 MHz, FCLK = 400 MSPS, NBSFDR, ±1 MHz

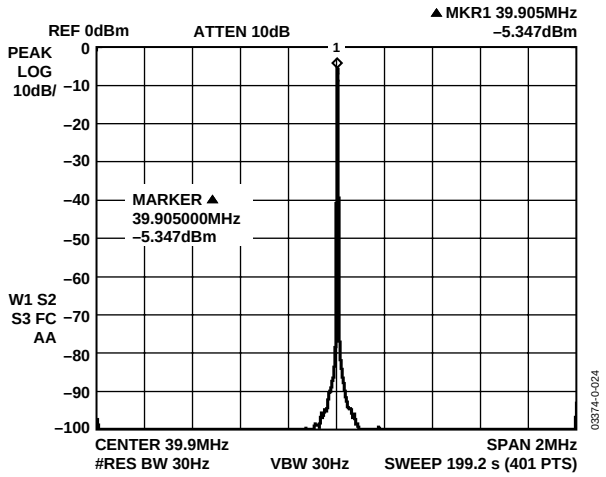

Figure 12. F_{OUT} = 39.9 MHz, FCLK = 400 MSPS, NBSFDR, ±1 MHz

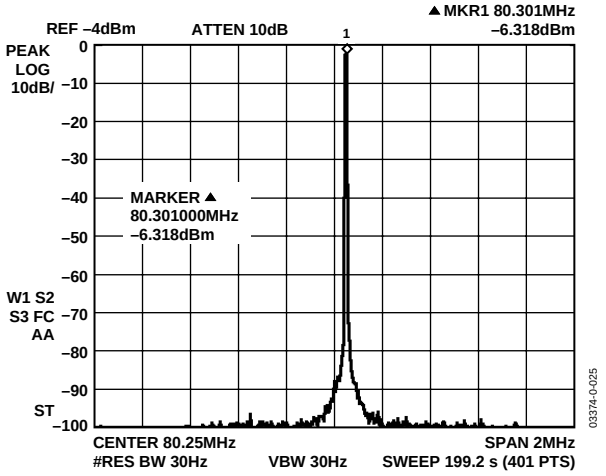

Figure 13. F_{OUT} = 80.3 MHz, FCLK = 400 MSPS, NBSFDR, ±1 MHz

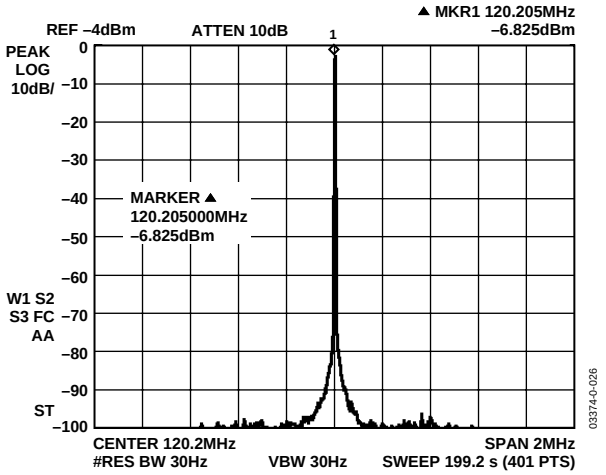

Figure 14. F_{OUT} = 120.2 MHz, FCLK = 400 MSPS, NBSFDR, ±1 MHz

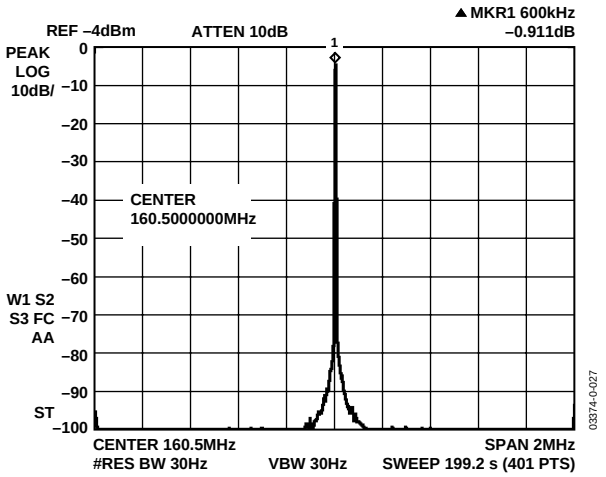

Figure 15. F_{OUT} = 160 MHz, FCLK = 400 MSPS, NBSFDR, ±1 MHz

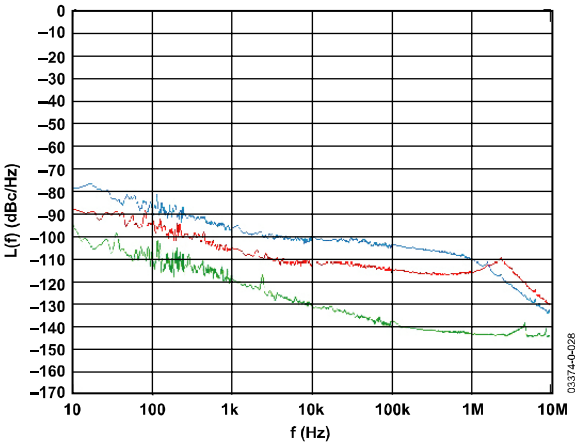

Figure 16. Residual Phase Noise with F_{OUT} = 159.5 MHz, F_{CLK} = 400 MSPS (Green), 4 × 100 MSPS (Red), and 20 × 20 MSPS (Blue)

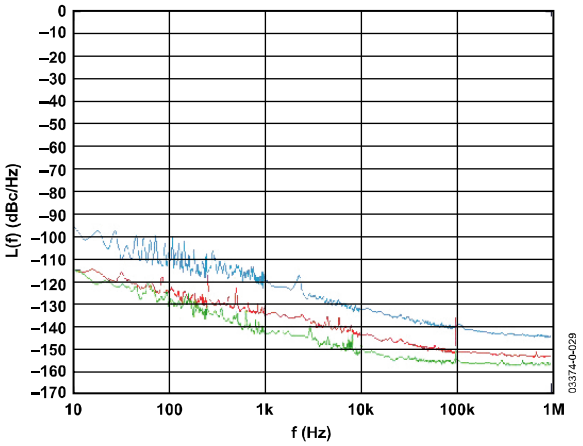

Figure 18. Residual Phase Noise with F_{OUT} = 9.5 MHz, F_{CLK} = 400 MSPS (Green), 4 ×100 MSPS (Red), and 20 × 20 MSPS (Blue)

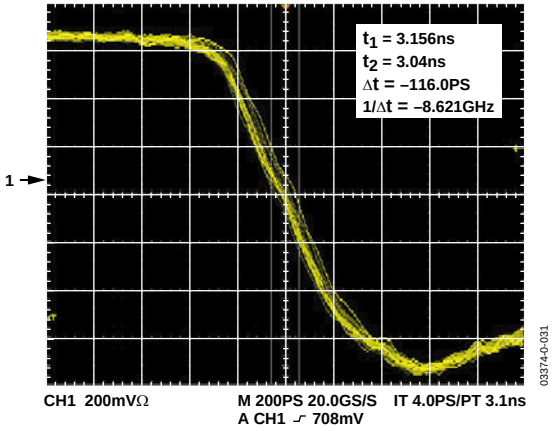

Figure 17. Residual Peak-to-Peak Jitter of DDS and Comparator Operating Together at 160 MHz

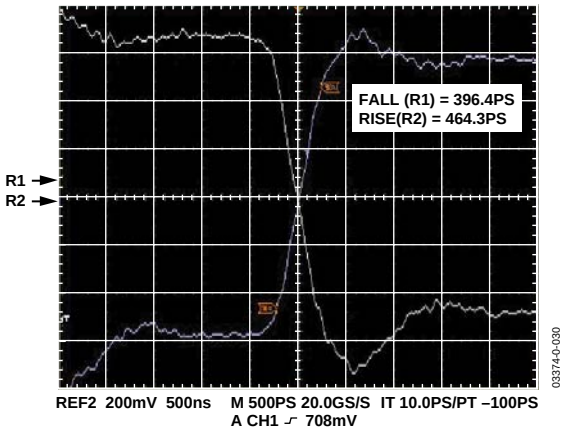

Figure 19. Comparator Rise and Fall Time at 160 MHz

THEORY OF OPERATION

COMPONENT BLOCKS

DDS Core

The output frequency (f_O) of the DDS is a function of the frequency of the system clock (SYSCLK), the value of the frequency tuning word (*FTW*), and the capacity of the accumulator (2^{32}, in this case). The exact relationship is given below with f_S defined as the frequency of SYSCLK.

$$f_O = (FTW)(f_S)/2^{32} \quad with \quad 0 \le FTW \le 2^{31}$$

$$f_O = f_S \times \left(1 - \left(FTW/2^{32}\right)\right) \quad with \quad 2^{31} < FTW < 2^{32} - 1$$

The value at the output of the phase accumulator is translated to an amplitude value via the COS(x) functional block and routed to the DAC.

In certain applications, it is desirable to force the output signal to zero phase. Simply setting the FTW to 0 does not accomplish this; it only results in the DDS core holding its current phase value. Thus, a control bit is required to force the phase accumulator output to zero.

At power-up, the clear phase accumulator bit is set to Logic 1, but the buffer memory for this bit is cleared (Logic 0). Therefore, upon power-up, the phase accumulator will remain clear until the first I/O UPDATE is issued.

Phase-Locked Loop (PLL)

The PLL allows multiplication of the REFCLK frequency. Control of the PLL is accomplished by programming the 5-bit REFCLK multiplier portion of Control Function Register No. 2, Bits <7:3>.

When programmed for values ranging from 0x04 to 0x14 (4 decimal to 20 decimal), the PLL multiplies the REFCLK input frequency by the corresponding decimal value. However, the maximum output frequency of the PLL is restricted to 400 MHz. Whenever the PLL value is changed, the user should be aware that time must be allocated to allow the PLL to lock (approximately 1 ms).

The PLL is bypassed by programming a value outside the range of 4 to 20 (decimal). When bypassed, the PLL is shut down to conserve power.

Clock Input

The AD9952 supports various clock methodologies. Support for differential or single-ended input clocks and enabling of an on-chip oscillator and/or a phase-locked loop (PLL) multiplier is all controlled via user programmable bits. The AD9952 may be configured in one of six operating modes to generate the system clock. The modes are configured using the CLKMODESELECT pin, CFR1<4>, and CFR2<7:3>. Connecting the external pin CLKMODESELECT to Logic High enables the on-chip crystal oscillator circuit. With the on-chip oscillator enabled, users of the AD9952 connect an external crystal to the REFCLK and REFCLKB inputs to produce a low frequency reference clock in the range of 20 MHz to 30 MHz. The signal generated by the oscillator is buffered before it is delivered to the rest of the chip. This buffered signal is available via the CRYSTAL OUT pin. Bit CFR1<4> can be used to enable or disable the buffer, turning on or off the system clock. The oscillator itself is not powered down in order to avoid long start-up times associated with turning on a crystal oscillator. Writing CFR2<9> to Logic High enables the crystal oscillator output buffer. Logic Low at CFR2<9> disables the oscillator output buffer.

Connecting CLKMODESELECT to Logic Low disables the on-chip oscillator and the oscillator output buffer. With the oscillator disabled, an external oscillator must provide the REFCLK and/or REFCLKB signals. For differential operation, these pins are driven with complementary signals. For single-ended operation, a 0.1 µF capacitor should be connected between the unused pin and the analog power supply. With the capacitor in place, the clock input pin bias voltage is 1.35 V. In addition, the PLL may be used to multiply the reference frequency by an integer value in the range of 4 to 20. Table 4 summarizes the clock modes of operation. Note that the PLL multiplier is controlled via the CFR2<7:3> bits, independent of the CFR1<4> bit.

Table 4.Clock Input Modes of Operation

CFR1<4>	CLKMODESELECT	CFR2<7:3>	Oscillator Enabled?	System Clock	Frequency Range (MHz)
Low	High	3 < M < 21	Yes	$F_{CLK} = F_{OSC} \times M$	$80 < F_{CLK} < 400$
Low	High	M < 4 or M > 20	Yes	$F_{CLK} = F_{OSC}$	$20 < F_{CLK} < 30$
Low	Low	3 < M < 21	No	$F_{CLK} = F_{OSC} \times M$	$80 < F_{CLK} < 400$
Low	Low	M < 4 or M > 20	No	$F_{CLK} = F_{OSC}$	$10 < F_{CLK} < 400$
High	X	X	No	$F_{CLK} = 0$	N/A

DAC Output

The AD9952 incorporates an integrated 14-bit current output DAC. **Unlike most DACs, this output is referenced to AVDD, not AGND.**

Two complementary outputs provide a combined full-scale output current (I_{OUT}). Differential outputs reduce the amount of common-mode noise that might be present at the DAC output, offering the advantage of an increased signal-to-noise ratio. The full-scale current is controlled by an external resistor (R_{SET}) connected between the DAC_R_{SET} pin and the DAC ground (AGND_DAC). The full-scale current is proportional to the resistor value as follows:

$$R_{SET} = 39.19 / I_{OUT}$$

The maximum full-scale output current of the combined DAC outputs is 15 mA, but limiting the output to 10 mA provides the best spurious-free dynamic range (SFDR) performance. The DAC output compliance range is AVDD + 0.5 V to AVDD – 0.5 V. Voltages developed beyond this range will cause excessive DAC distortion and could potentially damage the DAC output circuitry. Proper attention should be paid to the load termination to keep the output voltage within this compliance range.

Comparator

Many applications require a square wave signal rather than a sine wave. For example, in most clocking applications a high slew rate helps to reduce phase noise and jitter. To support these applications, the AD9952 includes an on-chip comparator. The comparator has a bandwidth greater than 200 MHz and a common-mode input range of 1.3 V to 1.8 V. By setting the comparator power-down bit, CFR1<6>, the comparator can be turned off to save on power consumption.

Serial IO Port

The AD9952 serial port is a flexible, synchronous serial communications port that allows easy interface to many industry-standard microcontrollers and microprocessors. The serial I/O port is compatible with most synchronous transfer formats, including both the Motorola 6905/11 SPI® and Intel® 8051 SSR protocols.

The interface allows read/write access to all registers that configure the AD9952. MSB first or LSB first transfer formats are supported. The AD9952's serial interface port can be configured as a single pin I/O (SDIO), which allows a 2-wire interface or two unidirectional pins for in/out (SDIO/SDO), which in turn enables a 3-wire interface. Two optional pins, IOSYNC and $\overline{CS}$, enable greater flexibility for system design in the AD9952.

Register Map and Descriptions

The register map is listed in Table 5.

Table 5. Register Map

Register Name (Serial Address)	Bit Range	(MSB) Bit 7	Bit 6	Bit 5	Bit 4	Bit 3	Bit 2	Bit 1	(LSB) Bit 0	Default Value
Control Function Register No.1 (CFR1) (0x00)	<7:0>	Digital Power-Down	Comparator Power-Down	DAC Power-Down	Clock Input Power-Down	External Power-Down Mode	Not Used	SYNC_CLK Out Disable	Not Used	0x00
	<15:8>	Not Used	Not Used	AutoClr Phase Accum.	Enable SINE Output	Not Used	Clear Phase Accum.	SDIO Input Only	LSB First	0x00
	<23:16>	Automatic Sync Enable	Software Manual Sync	Not Used						0x00
	<31:24>	Not Used					Load ARR @ I/O UD	OSK Enable	Auto OSK Keying	0x00
Control Function Register No. 2 (CFR2) (0x01)	<7:0>	REFCLK Multiplier 0x00 or 0x01, or 0x02 or 0x03: Bypass Multiplier 0x04 to 0x14: 4× to 20× Multiplication					VCO Range	Charge Pump Current <1:0>		0x00
	<15:8>	Not Used				High Speed Sync Enable	Hardware Manual Sync Enable	CRYSTAL OUT Pin Active	Not Used	0x00
	<23:16>	Not Used								0x00
Amplitude Scale Factor (ASF) (0x02)	<7:0>	Amplitude Scale Factor Register <7:0>								0x00
	<15:8>	Auto Ramp Rate Speed Control <1:0>		Amplitude Scale Factor Register <13:8>						0x00
Amplitude Ramp Rate (ARR) (0x03)	<7:0>	Amplitude Ramp Rate Register <7:0>								0x00
Frequency Tuning Word (FTW0) (0x04)	<7:0>	Frequency Tuning Word No. 0 <7:0>								0x00
	<15:8>	Frequency Tuning Word No. 0 <15:8>								0x00
	<23:16>	Frequency Tuning Word No. 0 <23:16>								0x00
	<31:24>	Frequency Tuning Word No. 0 <31:24>								0x00
Phase Offset Word (POW0) (0x05)	<7:0>	Phase Offset Word No. 0 <7:0>								0x00
	<15:8>	Not Used<1:0>		Phase Offset Word No. 0 <13:8>						0x00

Control Register Bit Descriptions

Control Function Register No. 1 (CFR1)

The CFR1 is used to control the various functions, features, and modes of the AD9952. The functionality of each bit is detailed below.

CFR1<31:27>: Not Used

CFR1<26>: Amplitude Ramp Rate Load Control Bit

CFR1<26> = 0 (default). The amplitude ramp rate timer is loaded only upon timeout (timer == 1) and is not loaded due to an I/O UPDATE input signal.

CFR1<26> = 1. The amplitude ramp rate timer is loaded upon timeout (timer == 1) or at the time of an I/O UPDATE input signal.

CFR1<25>: Shaped On-Off Keying Enable Bit

CFR1<25> = 0 (default). Shaped on-off keying is bypassed.

CFR1<25> = 1. Shaped on-off keying is enabled. When enabled, CFR1<24> controls the mode of operation for this function.

CFR1<24>: Auto Shaped On-Off Keying Enable Bit (Only Valid when CFR1<25> Is Active High)

CFR1<24> = 0 (default). When CFR1<25> is active, a Logic 0 on CFR1<24> enables the manual shaped on-off keying operation. Each amplitude sample sent to the DAC is multiplied by the amplitude scale factor. See the Shaped On-Off Keying section for details.

CFR1<24> = 1. When CFR1<25> is active, a Logic 1 on CFR1<24> enables the auto shaped on-off keying operation. Toggling the OSK pin high will cause the output scalar to ramp up from zero scale to the amplitude scale factor at a rate determined by the amplitude ramp rate. Toggling the OSK pin low will cause the output to ramp down from the amplitude scale factor to zero scale at the amplitude ramp rate. See the Shaped On-Off Keying section for details.

CFR1<23>: Automatic Synchronization Enable Bit

CFR1<23> = 0 (default). The automatic synchronization feature of multiple AD9952s is inactive.

CFR1<23> = 1. The automatic synchronization feature of multiple AD9952s is active. The device will synchronize its internal synchronization clock (SYNC_CLK) to align to the signal present on the SYNC_IN input. See the Synchronizing Multiple AD9952s section for details.

CFR1<22>: Software Manual Synchronization of Multiple AD9952s.

CFR1<22> = 0 (default). The manual synchronization feature is inactive.

CFR1<22> = 1. The software controlled manual synchronization feature is executed. The SYNC_CLK rising edge is advanced by one SYNC_CLK cycle and this bit is cleared. To advance the rising edge multiple times, this bit needs to be set for each advance. See the Synchronizing Multiple AD9952s section for details.

CFR1<21:14>: Not Used

CFR1<13>: Auto-Clear Phase Accumulator Bit

CFR1<13> = 0 (default). The current state of the phase accumulator remains unchanged when the frequency tuning word is applied.

CFR1<13> = 1. This bit automatically synchronously clears (loads 0s into) the phase accumulator for one cycle upon reception of an I/O UPDATE signal.

CFR1<12>: Sine/Cosine Select Bit

CFR1<12> = 0 (default). The angle-to-amplitude conversion logic employs a COSINE function.

CFR1<12> = 1. The angle-to-amplitude conversion logic employs a SINE function.

CFR1<11>: Not Used

CFR1<10>: Clear Phase Accumulator

CFR1<10> = 0 (default). The phase accumulator functions as normal.

CFR1<10> = 1. The phase accumulator memory elements are cleared and held clear until this bit is cleared.

CFR1<9>: SDIO Input Only

CFR1<9> = 0 (default). The SDIO pin has bidirectional operation (2-wire serial programming mode).

CFR1<9> = 1. The serial data I/O pin (SDIO) is configured as an input only pin (3-wire serial programming mode).

CFR1<8>: LSB First

CFR1<8> = 0 (default). MSB first format is active.

CFR1<8> = 1. The serial interface accepts serial data in LSB first format.

CFR1<7>: Digital Power-Down Bit

CFR1<7> = 0 (default). All digital functions and clocks are active.

CFR1<7> = 1. All non-IO digital functionality is suspended, lowering the power significantly.

CFR1<6>: Comparator Power-Down Bit

CFR1<6> = 0 (default). The comparator is enabled for operation.

CFR1<6> = 1. The comparator is disabled and is in its lowest power dissipation state.

CFR1<5>: DAC Power-Down Bit

CFR1<5> = 0 (default). The DAC is enabled for operation.

CFR1<5> = 1. The DAC is disabled and is in its lowest power dissipation state.

CFR1<4>: Clock Input Power-Down Bit

CFR1<4> = 0 (default). The clock input circuitry is enabled for operation.

CFR1<4> = 1. The clock input circuitry is disabled and the device is in its lowest power dissipation state.

CFR1<3>: External Power-Down Mode

CFR1<3> = 0 (default). The external power-down mode selected is the rapid recovery power-down mode. In this mode, when the PWRDWNCTL input pin is high, the digital logic and the DAC digital logic are powered down. The DAC bias circuitry, PLL, oscillator, and clock input circuitry are not powered down.

CFR1<3> = 1. The external power-down mode selected is the full power-down mode. In this mode, when the PWRDWNCTL input pin is high, all functions are powered down. This includes the DAC and PLL, which take a significant amount of time to power up.

CFR1<2>: Not Used

CFR1<1>: SYNC_CLK Disable Bit

CFR1<1> = 0 (default). The SYNC_CLK pin is active.

CFR1<1> = 1. The SYNC_CLK pin assumes a static Logic 0 state to keep noise generated by the digital circuitry at a minimum. However, the synchronization circuitry remains active (internally) to maintain normal device timing.

CFR1<0>: Not Used, Leave at 0

Control Function Register No. 2 (CFR2)

The CFR2 is used to control the various functions, features, and modes of the AD9952, primarily related to the analog sections of the chip.

CFR2<23:12>: Not Used

CFR2<11>: High Speed Sync Enable Bit

CFR2<11> = 0 (default). The high speed sync enhancement is off.

CFR2<11> = 1. The high speed sync enhancement is on. This bit should be set when attempting to use the auto-synchronization feature for SYNC_CLK inputs beyond 50 MHz, (200 MSPS SYSCLK). See the Synchronizing Multiple AD9952s section for details.

CFR2<10>: Hardware Manual Sync Enable Bit

CFR2<10> = 0 (default). The hardware manual sync function is off.

CFR2<10> = 1. The hardware manual sync function is enabled. While this bit is set, a rising edge on the SYNC_IN pin will cause the device to advance the SYNC_CLK rising edge by one REFCLK cycle. Unlike the software manual sync enable bit, this bit does not self-clear. Once the hardware manual sync mode is enabled, it will stay enabled until this bit is cleared. See the Synchronizing Multiple AD9952s section for details.

CFR2<9>: CRYSTAL OUT Enable Bit

CFR2<9> = 0 (default). The CRYSTAL OUT pin is inactive.

CFR2<9> = 1. The CRYSTAL OUT pin is active. When active, the crystal oscillator circuitry output drives the CRYSTAL OUT pin, which can be connected to other devices to produce a reference frequency. The oscillator will respond to crystals in the range of 20 MHz to 30 MHz.

CFR2<8>: Not Used

CFR2<7:3>: Reference Clock Multiplier Control Bits

This 5-bit word controls the multiplier value out of the clock-multiplier (PLL) block. Valid values are decimal 4 to 20 (0x04 to 0x14). Values entered outside this range will bypass the clock multiplier. See the Phase-Locked Loop (PLL) section for details.

CFR2<2>: VCO Range Control Bit

This bit is used to control the range setting on the VCO. When CFR2<2> == 0 (default), the VCO operates in a range of 100 MHz to 250 MHz. When CFR2<2> == 1, the VCO operates in a range of 250 MHz to 400 MHz.

CFR2<1:0>: Charge Pump Current Control Bits

These bits are used to control the current setting on the charge pump. The default setting, CFR2<1:0>, sets the charge pump current to the default value of 75 μA. For each bit added (01, 10, 11), 25 μA of current is added to the charge pump current: 100 μA, 125 μA, and 150 μA.

Other Register Descriptions

Amplitude Scale Factor (ASF)

The ASF register stores the 2-bit auto ramp rate speed value and the 14-bit amplitude scale factor used in the output shaped keying (OSK) operation. In auto OSK operation, ASF <15:14> tells the OSK block how many amplitude steps to take for each increment or decrement. ASF<13:0> sets the maximum value achievable by the OSK internal multiplier. In manual OSK mode, ASF<15:14> has no effect. ASF <13:0> provides the output scale factor directly. If the OSK enable bit is cleared, CFR1<25> = 0, this register has no effect on device operation.

Amplitude Ramp Rate (ARR)

The ARR register stores the 8-bit amplitude ramp rate used in the auto OSK mode. This register programs the rate at which the amplitude scale factor counter increments or decrements. If the OSK is set to manual mode, or if OSK enable is cleared, this register has no effect on device operation.

Frequency Tuning Word 0 (FTW0)

The frequency tuning word is a 32-bit register that controls the rate of accumulation in the phase accumulator of the DDS core. Its specific role is dependent on the device mode of operation.

Phase Offset Word (POW)

The phase offset word is a 14-bit register that stores a phase offset value. This offset value is added to the output of the phase accumulator to offset the current phase of the output signal. The exact value of phase offset is given by the following formula:

$$\Phi = \left(\frac{POW}{2^{14}} \right) \times 360°$$

MODES OF OPERATION

Single-Tone Mode

In single-tone mode, the DDS core uses a single tuning word. Whatever value is stored in FTW0 is supplied to the phase accumulator. This value can only be changed manually, which is done by writing a new value to FTW0 and by issuing an I/O UPDATE. Phase adjustment is possible through the phase offset register.

PROGRAMMING AD9952 FEATURES

Phase Offset Control

A 14-bit phase offset (θ) may be added to the output of the phase accumulator by means of the control registers. This feature provides the user with two different methods of phase control.

The first method is a static phase adjustment, where a fixed phase offset is loaded into the appropriate phase offset register and left unchanged. The result is that the output signal is offset by a constant angle relative to the nominal signal. This allows the user to phase align the DDS output with some external signal, if necessary.

The second method of phase control is where the user regularly updates the phase offset register via the I/O port. By properly modifying the phase offset as a function of time, the user can implement a phase modulated output signal. However, both the speed of the I/O port and the frequency of SYSCLK limit the rate at which phase modulation can be performed.

The AD9952 allows for a programmable continuous zeroing of the phase accumulator as well as a clear and release or automatic zeroing function. Each feature is individually controlled via the CFR1 bits. CFR1<13> is the automatic clear phase accumulator bit. CFR1<10> clears the phase accumulator and holds the value to zero.

Continuous Clear Bit

The continuous clear bit is simply a static control signal that, when active high, holds the phase accumulator at zero for the entire time the bit is active. When the bit goes low, inactive, the phase accumulator is allowed to operate.

Clear and Release Function

When set, the auto-clear phase accumulator clears and releases the phase accumulator upon receiving an I/O UPDATE. The automatic clearing function is repeated for every subsequent I/O UPDATE until the appropriate auto-clear control bit is cleared.

Shaped On-Off Keying

The shaped on-off keying function of the AD9952 allows the user to control the ramp-up and ramp-down time of an on-off emission from the DAC. This function is used in burst transmissions of digital data to reduce the adverse spectral impact of short, abrupt bursts of data.

Auto and manual shaped on-off keying modes are supported. The auto mode generates a linear scale factor at a rate determined by the amplitude ramp rate (ARR) register controlled by an external pin (OSK). Manual mode allows the user to directly control the output amplitude by writing the scale factor value into the amplitude scale factor (ASF) register.

The shaped on-off keying function may be bypassed (disabled) by clearing the OSK enable bit (CFR1<25> = 0).

The modes are controlled by two bits located in the most significant byte of the control function register (CFR). CFR1<25> is the shaped on-off keying enable bit. When CFR1<25> is set, the output scaling function is enabled and CFR1<25> bypasses the function. CFR1<24> is the internal shaped on-off keying active bit. When CFR1<24> is set, internal shaped on-off keying mode is active; CFR1<24> is cleared, external shaped on-off keying mode is active. CFR1<24> is a Don't Care if the shaped on-off keying enable bit (CFR1<25>) is cleared. The power up condition is shaped on-off keying disabled (CFR1<25> = 0). Figure 20 shows the block diagram of the OSK circuitry.

AUTO Shaped On-Off Keying Mode Operation

The auto shaped on-off keying mode is active when CFR1<25> and CFR1<24> are set. When auto shaped on-off keying mode is enabled, a single-scale factor is internally generated and applied to the multiplier input for scaling the output of the DDS core block (see Figure 20). The scale factor is the output of a 14-bit counter that increments/decrements at a rate determined by the contents of the 8-bit output ramp rate register. The scale factor increases if the OSK pin is high and decreases if the OSK pin is low. The scale factor is an unsigned value such that all 0s multiply the DDS core output by 0 (decimal) and 0x3FFF multiplies the DDS core output by 16383 (decimal).

For those users who use the full amplitude (14-bits) but need fast ramp rates, the internally generated scale factor step size is controlled via the ASF<15:14> bits. Table 6 describes the increment/decrement step size of the internally generated scale factor per the ASF<15:14> bits.

A special feature of this mode is that the maximum output amplitude allowed is limited by the contents of the amplitude scale factor register. This allows the user to ramp to a value less than full scale.

Table 6. Auto-Scale Factor Internal Step Size

ASF<15:14> (Binary)	Increment/Decrement Size
00	1
01	2
10	4
11	8

OSK Ramp Rate Timer

The OSK ramp rate timer is a loadable down counter, which generates the clock signal to the 14-bit counter that generates the internal scale factor. The ramp rate timer is loaded with the value of the ASFR every time the counter reaches 1 (decimal). This load and countdown operation continues for as long as the timer is enabled, unless the timer is forced to load before reaching a count of 1.

If the load OSK timer bit (CFR1<26>) is set, the ramp rate timer is loaded upon an I/O UPDATE or upon reaching a value of 1. The ramp timer can be loaded before reaching a count of 1 by three methods.

The first method of loading is by changing the OSK input pin. When the OSK input pin changes state, the ASFR value is loaded into the ramp rate timer, which then proceeds to count down as normal.

The second method in which the sweep ramp rate timer can be loaded before reaching a count of 1 is if the load OSK timer bit (CFR1<26>) is set and an I/O UPDATE is issued.

The last method in which the sweep ramp rate timer can be loaded before reaching a count of 1 is when going from the inactive auto shaped on-off keying mode to the active auto shaped on-off keying mode; that is, when the sweep enable bit is being set.

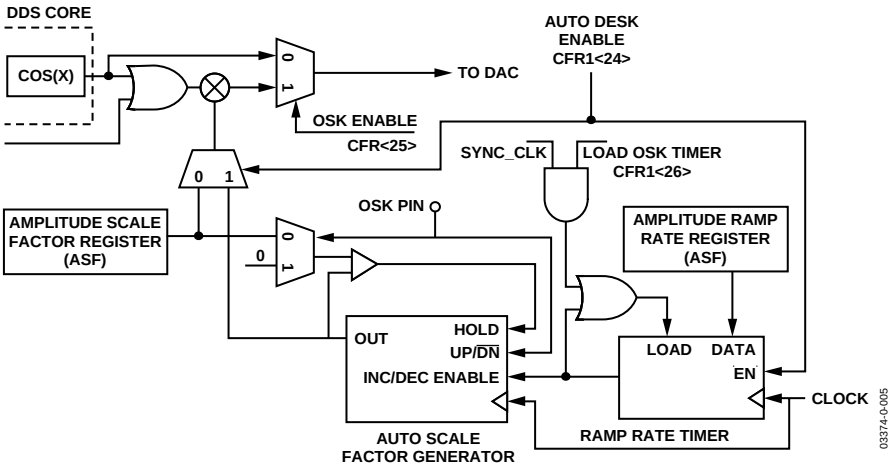

Figure 20. On-Off Shaped Keying, Block Diagram

External Shaped On-Off Keying Mode Operation

The external shaped on-off keying mode is enabled by writing CFR1<25> to a Logic 1 and writing CFR1<24> to a Logic 0. When configured for external shaped on-off keying, the content of the ASFR becomes the scale factor for the data path. The scale factors are synchronized to SYNC_CLK via the I/O UPDATE functionality.

Synchronization; Register Updates (I/O UPDATE)

Functionality of the SYNC_CLK and I/O UPDATE

Data into the AD9952 is synchronous to the SYNC_CLK signal (supplied externally to the user on the SYNC_CLK pin). The I/O UPDATE pin is sampled on the rising edge of the SYNC_CLK.

Internally, SYSCLK is fed to a divide-by-4 frequency divider to produce the SYNC_CLK signal. The SYNC_CLK signal is provided to the user on the SYNC_CLK pin. This enables synchronization of external hardware with the device's internal clocks. This is accomplished by forcing any external hardware to obtain its timing from SYNC_CLK. The I/O UPDATE signal coupled with SYNC_CLK is used to transfer internal buffer contents into the control registers of the device. The combination of the SYNC_CLK and I/O UPDATE pins provides the user with constant latency relative to SYSCLK, and also ensures phase continuity of the analog output signal when a new tuning word or phase offset value is asserted. Figure 21 demonstrates an I/O UPDATE timing cycle and synchronization.

Notes to synchronization logic:

1) The I/O UPDATE signal is edge detected to generate a single rising edge clock signal that drives the register bank flops. The I/O UPDATE signal has no constraints on duty cycle. The minimum low time on I/O UPDATE is one SYNC_CLK clock cycle.

2) The I/O UPDATE pin is set up and held around the rising edge of SYNC_CLK and has zero hold time and 4 ns setup time.

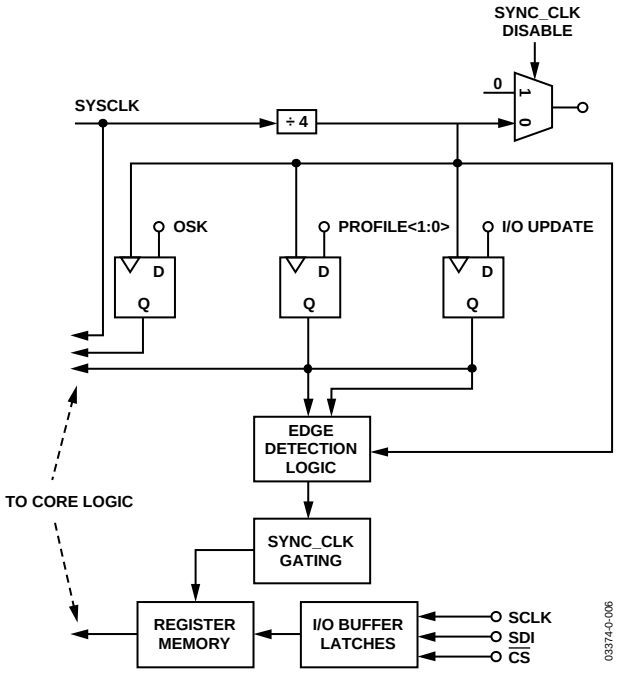

Figure 21. I/O Synchronization Block Diagram

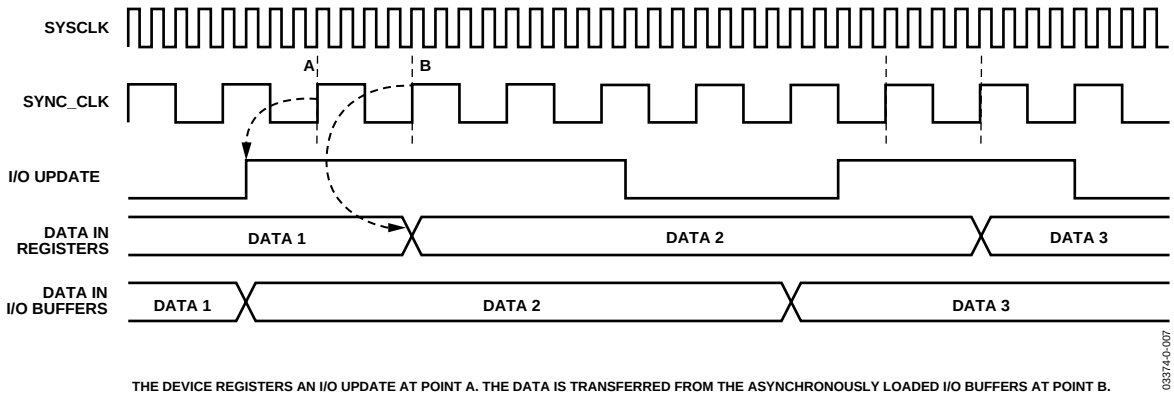

Figure 22. I/O Synchronization Timing Diagram

Synchronizing Multiple AD9952s

The AD9952 product allows easy synchronization of multiple AD9952s. There are three modes of synchronization available to the user: an automatic synchronization mode, a software controlled manual synchronization mode, and a hardware controlled manual synchronization mode. In all cases, when a user wants to synchronize two or more devices, the following considerations must be observed. First, all units must share a common clock source. Trace lengths and path impedance of the clock tree must be designed to keep the phase delay of the different clock branches as closely matched as possible. Second, the I/O UPDATE signal's rising edge must be provided synchronously to all devices in the system. Finally, regardless of the internal synchronization method used, the DVDD_I/O supply should be set to 3.3 V for all devices that are to be synchronized. AVDD and DVDD should be left at 1.8 V.

In automatic synchronization mode, one device is chosen as a master; the other device(s) will be slaved to this master. When configured in this mode, the slaves will automatically synchronize their internal clocks to the SYNC_CLK output signal of the master device. To enter automatic synchronization mode, set the slave device's automatic synchronization bit (CFR1<23> = 1). Connect the SYNC_IN input(s) to the master SYNC_CLK output. The slave device will continuously update the phase relationship of its SYNC_CLK until it is in phase with the SYNC_IN input, which is the SYNC_CLK of the master device. When attempting to synchronize devices running at SYSCLK speeds beyond 250 MSPS, the high speed sync enhancement enable bit should be set (CFR2<11> = 1).

In software manual synchronization mode, the user forces the device to advance the SYNC_CLK rising edge one SYSCLK cycle (1/4 SYNC_CLK period). To activate the manual synchronization mode, set the slave device's software manual synchronization bit (CFR1<22> = 1). The bit (CFR1<22>) will be cleared immediately. To advance the rising edge of the SYNC_CLK multiple times, this bit will need to be set multiple times.

In hardware manual synchronization mode, the SYNC_IN input pin is configured such that it will now advance the rising edge of the SYNC_CLK signal each time the device detects a rising edge on the SYNC_IN pin. To put the device into hardware manual synchronization mode, set the hardware manual synchronization bit (CFR2<10> = 1). Unlike the software manual synchronization bit, this bit does not self-clear. Once the hardware manual synchronization mode is enabled, all rising edges detected on the SYNC_IN input will cause the device to advance the rising edge of the SYNC_CLK by one SYSCLK cycle until this enable bit is cleared (CFR2<10> = 0).

Using a Single Crystal to Drive Multiple AD9952 Clock Inputs

The AD9952 crystal oscillator output signal is available on the CRYSTAL OUT pin, enabling one crystal to drive multiple AD9952s. In order to drive multiple AD9952s with one crystal, the CRYSTAL OUT pin of the AD9952 using the external crystal should be connected to the REFCLK input of the other AD9952.

The CRYSTAL OUT pin is static until the CFR2<9> bit is set, enabling the output. The drive strength of the CRYSTAL OUT pin is typically very low, so this signal should be buffered prior to using it to drive any loads.

SERIAL PORT OPERATION

With the AD9952, the instruction byte specifies read/write operation and the register address. Serial operations on the AD9952 occur only at the register level, not the byte level. For the AD9952, the serial port controller recognizes the instruction byte register address and automatically generates the proper register byte address. In addition, the controller expects that all bytes of that register will be accessed. It is required that all bytes of a register be accessed during serial I/O operations, with one exception. The IOSYNC function can be used to abort an I/O operation, thereby allowing some, but not all bytes to be accessed.

There are two phases to a communication cycle with the AD9952. Phase 1 is the instruction cycle, which is the writing of an instruction byte into the AD9952, coincident with the first eight SCLK rising edges. The instruction byte provides the AD9952 serial port controller with information regarding the data transfer cycle, which is Phase 2 of the communication cycle. The Phase 1 instruction byte defines whether the upcoming data transfer is read or write and the serial address of the register being accessed. (Note that the serial address of the register being accessed is NOT the same address as the bytes to be written. See the Example Operation section for details.)

The first eight SCLK rising edges of each communication cycle are used to write the instruction byte into the AD9952. The remaining SCLK edges are for Phase 2 of the communication cycle. Phase 2 is the actual data transfer between the AD9952 and the system controller. The number of bytes transferred during Phase 2 of the communication cycle is a function of the register being accessed. For example, when accessing the Control Function Register No. 2, which is three bytes wide, Phase 2 requires that three bytes be transferred. If accessing the frequency tuning word, which is four bytes wide, Phase 2 requires that four bytes be transferred. After transferring all data bytes per the instruction, the communication cycle is completed.

At the completion of any communication cycle, the AD9952 serial port controller expects the next eight rising SCLK edges to be the instruction byte of the next communication cycle. All data input to the AD9952 is registered on the rising edge of SCLK. All data is driven out of the AD9952 on the falling edge of SCLK. Figure 23 through Figure 26 are useful in understanding the general operation of the AD9952 serial port.

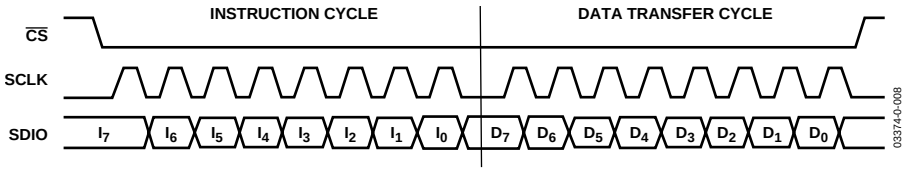

Figure 23. Serial Port Write Timing–Clock Stall Low

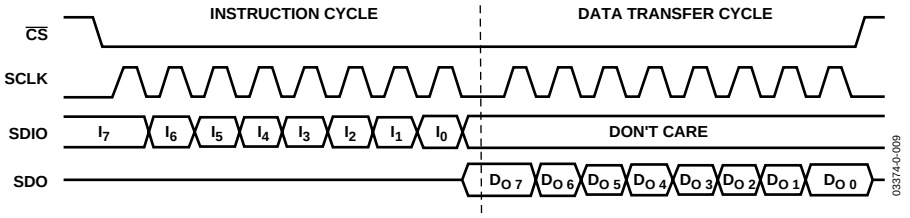

Figure 24. 3-Wire Serial Port Read Timing–Clock Stall Low

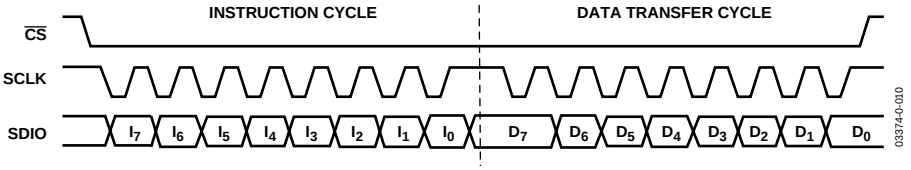

Figure 25. Serial Port Write Timing–Clock Stall High

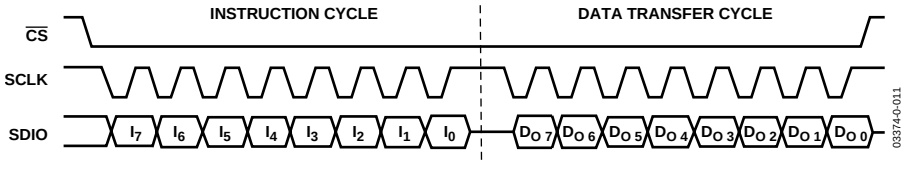

Figure 26. 2-Wire Serial Port Read Timing—Clock Stall High

INSTRUCTION BYTE

The instruction byte contains the following information:

Table 7.

MSB	D6	D5	D4	D3	D2	D1	LSB
R/$\overline{W}$	X	X	A4	A3	A2	A1	A0

R/$\overline{W}$—Bit 7 of the instruction byte determines whether a read or write data transfer will occur after the instruction byte write. Logic High indicates read operation. Logic 0 indicates a write operation.

X, X—Bits 6 and 5 of the instruction byte are Don't Care.

A4, A3, A2, A1, A0—Bits 4, 3, 2, 1, 0 of the instruction byte determine which register is accessed during the data transfer portion of the communications cycle.

SERIAL INTERFACE PORT PIN DESCRIPTION

SCLK—Serial Clock. The serial clock pin is used to synchronize data to and from the AD9952 and to run the internal state machines. SCLK maximum frequency is 25 MHz.

CSB—Chip Select Bar. CSB is active low input that allows more than one device on the same serial communications line. The SDO and SDIO pins will go to a high impedance state when this input is high. If driven high during any communications cycle, that cycle is suspended until $\overline{CS}$ is reactivated low. Chip select can be tied low in systems that maintain control of SCLK.

SDIO—Serial Data I/O. Data is always written into the AD9952 on this pin. However, this pin can be used as a bidirectional data line. Bit 7 of Register Address 0x00 controls the configuration of this pin. The default is Logic 0, which configures the SDIO pin as bidirectional.

SDO—Serial Data Out. Data is read from this pin for protocols that use separate lines for transmitting and receiving data. In the case where the AD9952 operates in a single bidirectional I/O mode, this pin does not output data and is set to a high impedance state.

IOSYNC—It synchronizes the I/O port state machines without affecting the addressable register's contents. An active high input on the IOSYNC pin causes the current communication cycle to abort. After IOSYNC returns low (Logic 0), another communication cycle may begin, starting with the instruction byte write.

MSB/LSB TRANSFERS

The AD9952 serial port can support both most significant bit (MSB) first or least significant bit (LSB) first data formats. This functionality is controlled by the Control Register 0x00 <8> bit. The default value of Control Register 0x00 <8> is low (MSB first). When Control Register 0x00 <8> is set high, the AD9952 serial port is in LSB first format. The instruction byte must be written in the format indicated by Control Register 0x00 <8>. If the AD9952 is in LSB first mode, the instruction byte must be written from least significant bit to most significant bit.

For MSB first operation, the serial port controller will generate the most significant byte (of the specified register) address first followed by the next lesser significant byte addresses until the I/O operation is complete. All data written to (read from) the AD9952 must be (will be) in MSB first order. If the LSB mode is active, the serial port controller will generate the least significant byte address first followed by the next greater significant byte addresses until the I/O operation is complete. All data written to (read from) the AD9952 must be (will be) in LSB first order.

Example Operation

To write the amplitude scale factor register in MSB first format, apply an instruction byte of 0x02 [serial address is 00010(b)]. From this instruction, the internal controller will generate an internal byte address of 0x07 (see the register map) for the first data byte written and an internal address of 0x08 for the next byte written. Since the amplitude scale factor register is two bytes wide, this ends the communication cycle.

To write the amplitude scale factor register in LSB first format, apply an instruction byte of 0x40. From this instruction, the internal controller will generate an internal byte address of 0x08 (see the register map) for the first data byte written and an internal address of 0x07for the next byte written. Since the amplitude scale factor register is two bytes wide, this ends the communication cycle.

Power-Down Functions of the AD9952

The AD9952 supports an externally controlled or hardware power-down feature as well as the more common software programmable power-down bits found in previous ADI DDS products.

The software control power-down allows the DAC, comparator, PLL, input clock circuitry, and digital logic to be individually powered down via unique control bits (CFR1<7:4>). With the exception of CFR1<6>, these bits are not active when the externally controlled power-down pin (PWRDWNCTL) is high. External power-down control is supported on the AD9952 via the PWRDWNCTL input pin. When the PWRDWNCTL input pin is high, the AD9952 will enter a power-down mode based on the CFR1<3> bit. When the PWRDWNCTL input pin is low, the external power-down control is inactive.

When the CFR1<3> bit is 0 and the PWRDWNCTL input pin is high, the AD9952 is put into a fast recovery power-down mode. In this mode, the digital logic and the DAC digital logic are powered down. The DAC bias circuitry, comparator, PLL, oscillator, and clock input circuitry is *not* powered down. The comparator can be individually powered down by setting the comparator power-down bit, CFR1<6> = 1.

When the CFR1<3> bit is high, and the PWRDWNCTL input pin is high, the AD9952 is put into the full power-down mode. In this mode, all functions are powered down. This includes the DAC and PLL, which take a significant amount of time to power up.

When the PWRDWNCTL input pin is high, the individual power-down bits (CFR1<7>, <5:4>) are invalid (Don't Care) and unused. When the PWRDWNCTL input pin is low, the individual power-down bits control the power-down modes of operation.

Note that the power-down signals are all designed such that a Logic 1 indicates the low power mode and a Logic 0 indicates the active or power-up mode.

Table 8 indicates the logic level for each power-down bit that drives out of the AD9952 core logic to the analog section and the digital clock generation section of the chip for the external power-down operation.

Layout Considerations

For the best performance, the following layout guidelines should be observed. Always provide the analog power supply (AVDD) and the digital power supply (DVDD) on separate supplies, even if just from two different voltage regulators driven by a common supply. Likewise, the ground connections (AGND, DGND) should be kept separate as far back to the source as possible (i.e., separate the ground planes on a localized board, even if the grounds connect to a common point in the system). Bypass capacitors should be placed as close to the device pin as possible. Usually, a multitiered bypassing scheme consisting of a small high frequency capacitor (100 pF) placed close to the supply pin and progressively larger capacitors (0.1 μF, 10 μF) placed further away from the actual supply source works best.

Table 8. Power-Down Control Functions

Control	Mode Active	Description
PWRDWNCTL = 0 CFR1<3> Don't Care	Software Control	Digital Power-Down = CFR1<7> Comparator Power-Down = CFR1<6> DAC Power-Down = CFR1<5> Input Clock Power-Down = CFR1<4>
PWRDWNCTL = 1 CFR1<3> = 0	External Control, Fast Recovery Power-Down Mode	Digital Power-Down = 1'b1 Comparator Power-Down = 1'b0 or CFR1<6> DAC Power-Down = 1'b0 Input Clock Power-Down = 1'b0
PWRDWNCTL = 1 CFR1<3> = 1	External Control, Full Power-Down Mode	Digital Power-Down = 1'b1 Comparator Power-Down = 1'b1 DAC Power-Down = 1'b1 Input Clock Power-Down = 1'b1

SUGGESTED APPLICATION CIRCUITS

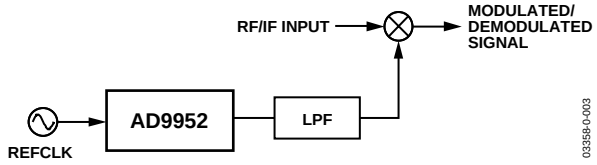

Figure 27. Synchronized LO for Upconversion/Down Conversion

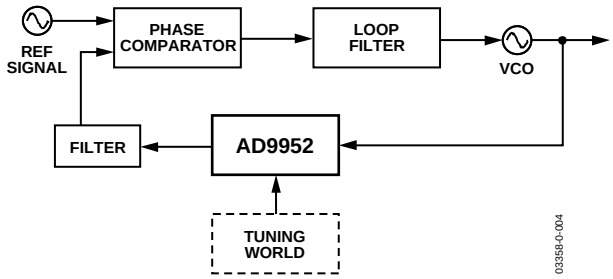

Figure 28. Digitally Programmable Divide-by-N Function in PLL

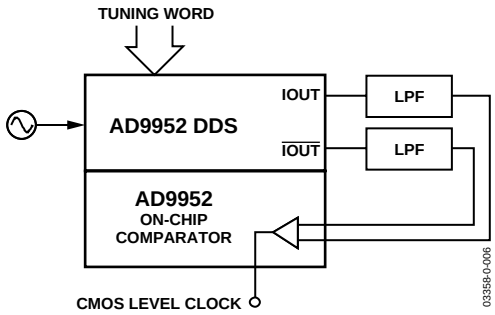

Figure 29. Frequency Agile Clock Generator

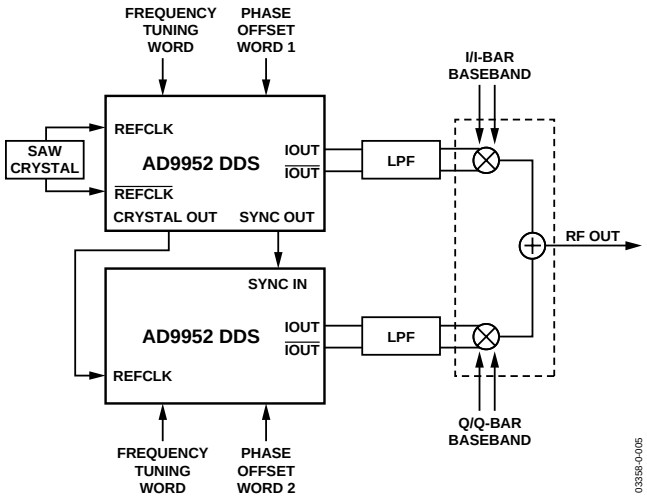

Figure 30. Two AD9952s Synchronized to Provide I and Q Carriers with Independent Phase Offsets for Nulling

OUTLINE DIMENSIONS

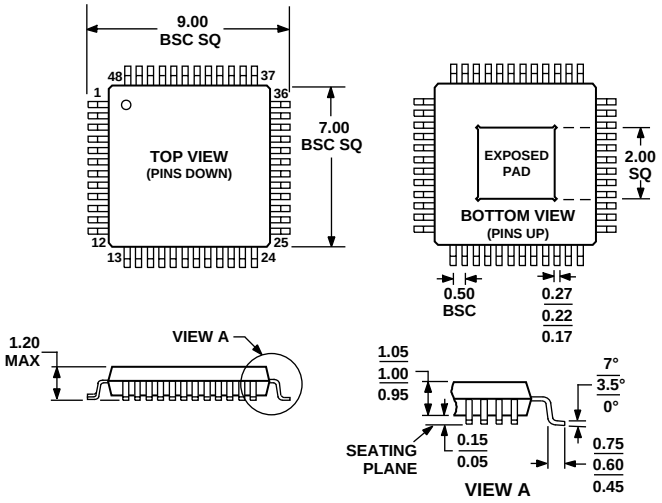

Figure 31. 48-Lead Thin Plastic Quad Flat Package, Exposed Pad [TQFP/EP] (SV-48)—Dimensions shown in millimeters

ESD CAUTION

ESD (electrostatic discharge) sensitive device. Electrostatic charges as high as 4000 V readily accumulate on the human body and test equipment and can discharge without detection. Although this product features proprietary ESD protection circuitry, permanent damage may occur on devices subjected to high energy electrostatic discharges. Therefore, proper ESD precautions are recommended to avoid performance degradation or loss of functionality.



WARNING—Please note that this device in its current form does not meet Analog Devices' standard requirements for ESD as measured against the charged device model (CDM). As such, special care should be used when handling this product, especially in a manufacturing environment. Analog Devices will provide a more ESD-hardy product in the near future at which time this warning will be removed from this data sheet.

ORDERING GUIDE

Model	Temperature Range	Package Description	Package Outline
AD9952YSV	–40°C to +105°C	48-Lead Thin Plastic Quad Flat Package, Exposed Pad, TQFP/EP	SV-48
AD9952YSV-REEL7	–40°C to +105°C	48-Lead TQFP/EP (500 Piece REEL7)	SV-48
AD9952/PCB		Evaluation Board	

NOTES

NOTES

© 2003 Analog Devices, Inc. All rights reserved. Trademarks and registered trademarks are the property of their respective owners.
D03358-0-12/03(0)