Complete 10-Bit 40 MSPS CCD Signal Processor

AD9840A

FEATURES

40 MSPS Correlated Double Sampler (CDS)
4 dB ± 6 dB Variable CDS Gain with 6-Bit Resolution
2 dB to 36 dB 10-Bit Variable Gain Amplifier (VGA)
Low Noise Clamp Circuits
Analog Preblanking Function
10-Bit 40 MSPS A/D Converter
Auxiliary Inputs with VGA and Input Clamp
3-Wire Serial Digital Interface
3 V Single Supply Operation
Low Power: 155 mW @ 3.0 V Supply
48-Lead LQFP Package

APPLICATIONS

Digital Video Camcorders
Digital Still Cameras
Industrial Imaging

PRODUCT DESCRIPTION

The AD9840A is a complete analog signal processor for CCD applications. It features a 40 MHz single-channel architecture designed to sample and condition the outputs of interlaced and progressive scan area CCD arrays. The AD9840A's signal chain consists of an input clamp, correlated double sampler (CDS), digitally controlled variable gain amplifier (VGA), black level clamp, and 10-bit A/D converter. Additional input modes are provided for processing analog video signals.

The internal registers are programmed through a 3-wire serial digital interface. Programmable features include gain adjustment, black level adjustment, input configuration, and power-down modes.

The AD9840A operates from a 3 V power supply, typically dissipates 155 mW, and is packaged in a 48-lead LQFP.

FUNCTIONAL BLOCK DIAGRAM

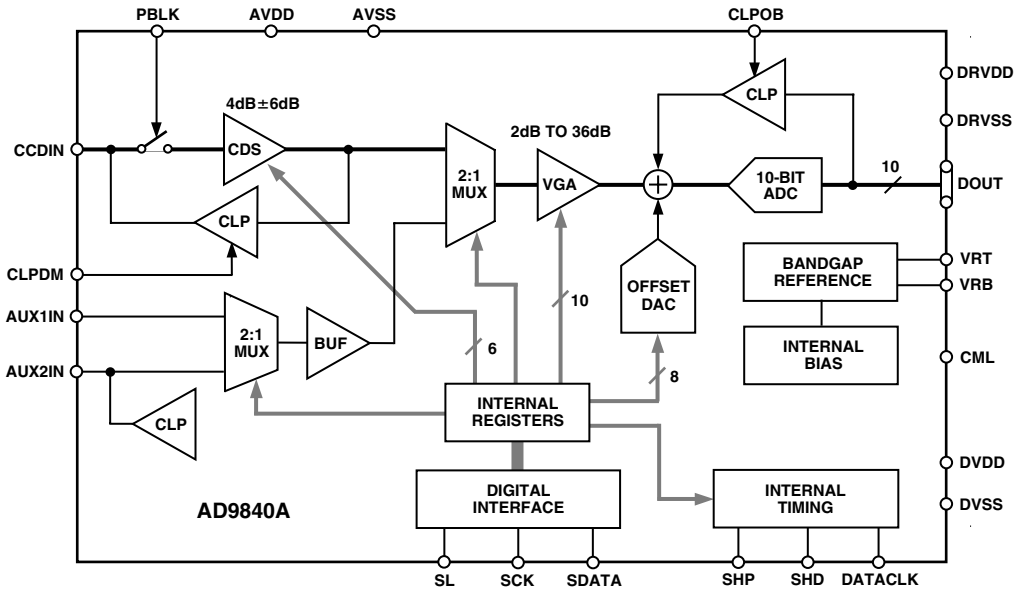

REV. 0

Information furnished by Analog Devices is believed to be accurate and reliable. However, no responsibility is assumed by Analog Devices for its use, nor for any infringements of patents or other rights of third parties which may result from its use. No license is granted by implication or otherwise under any patent or patent rights of Analog Devices.

One Technology Way, P.O. Box 9106, Norwood, MA 02062-9106, U.S.A.
Tel: 781/329-4700 World Wide Web Site: http://www.analog.com
Fax: 781/326-8703
© Analog Devices, Inc., 2000

AD9840A–SPECIFICATIONS

GENERAL SPECIFICATIONS (T_{MIN} to T_{MAX}, AVDD = DVDD = 3.0 V, $f_{DATACLK}$ = 40 MHz, unless otherwise noted.)

Parameter	Min	Typ	Max	Unit
TEMPERATURE RANGE				
Operating	–20		+85	°C
Storage	–65		+150	°C
POWER SUPPLY VOLTAGE				
Analog, Digital, Digital Driver	2.7		3.6	V
POWER CONSUMPTION				
Normal Operation		(Specified Under Each Mode of Operation)		
Power-Down Modes				
Fast Recovery Mode		90		mW
Standby		5		mW
Total Power-Down		1		mW
MAXIMUM CLOCK RATE	40			MHz
A/D CONVERTER				
Resolution	10			Bits
Differential Nonlinearity (DNL)		±0.5	±1.0	LSB
No Missing Codes	10			Bits Guaranteed
Full-Scale Input Voltage		2.0		V
Data Output Coding		Straight Binary		
VOLTAGE REFERENCE				
Reference Top Voltage (VRT)		2.0		V
Reference Bottom Voltage (VRB)		1.0		V

Specifications subject to change without notice.

DIGITAL SPECIFICATIONS (DRVDD = 2.7 V, C_L = 20 pF unless otherwise noted.)

Parameter	Symbol	Min	Typ	Max	Unit
LOGIC INPUTS					
High Level Input Voltage	V_{IH}	2.1			V
Low Level Input Voltage	V_{IL}			0.6	V
High Level Input Current	I_{IH}		10		µA
Low Level Input Current	I_{IL}		10		µA
Input Capacitance	C_{IN}		10		pF
LOGIC OUTPUTS					
High Level Output Voltage, I_{OH} = 2 mA	V_{OH}	2.2			V
Low Level Output Voltage, I_{OL} = 2 mA	V_{OL}			0.5	V

Specifications subject to change without notice.

CCD-MODE SPECIFICATIONS (T_{MIN} to T_{MAX}, AVDD = DVDD = 3.0 V, $f_{DATACLK}$ = f_{SHP} = f_{SHD} = 40 MHz, unless otherwise noted.)

Parameter	Min	Typ	Max	Unit	Notes
POWER CONSUMPTION		155		mW	
MAXIMUM CLOCK RATE	20			MHz	
CDS					
Allowable CCD Reset Transient[1]		500		mV	See Input Waveform in Note 1
Max CCD Black Pixel Amplitude[1]		200		mV	
Max Input Range before Saturation[1]	1.0			V p-p	With 4 dB CDS Gain
Max Input Range before Saturation		1.5		V p-p	With –2 dB CDS Gain
Max Input Range before Saturation		0.5		V p-p	With 10 dB CDS Gain
Max Output Range	1.6			V p-p	At Any CDS Gain Setting
Gain Resolution		64		Steps	
Gain Range (Two's Complement Coding)					See Figure 15 for CDS Gain Curve
Min Gain (CDS Gain Register Code 32)		–2		dB	
Medium Gain (CDS Gain Code 63)		4		dB	4 dB is Default with CDS Gain Disabled
Max Gain (CDS Gain Code 31)		10		dB	
VARIABLE GAIN AMPLIFIER (VGA)					
Max Input Range	1.6			V p-p	
Max Output Range	2.0			V p-p	
Gain Control Resolution		1024		Steps	
Gain Monotonicity		Guaranteed			
Gain Range					See Figure 13 for VGA Gain Curve
Low Gain (VGA Register Code 91)		2		dB	See Page 12 for Gain Equations
Max Gain (VGA Code 1023)		36		dB	
BLACK LEVEL CLAMP					
Clamp Level Resolution		256		Steps	
Clamp Level					Measured at ADC Output
Min Clamp Level		0		LSB	
Max Clamp Level		63.75		LSB	
SYSTEM PERFORMANCE					Specifications Include Entire Signal Chain
Gain Accuracy, VGA Code 91 to 1023	–1.0		+1.0	dB	Use Equations on Page 12 to Calculate Gain
Peak Nonlinearity, 500 mV Input Signal		0.4		%	12 dB Gain Applied (4 dB CDS Gain)
Total Output Noise		0.25		LSB rms	AC Grounded Input, 6 dB Gain Applied
Power Supply Rejection (PSR)		40		dB	Measured with Step Change on Supply
POWER-UP RECOVERY TIME					Clocks Must Be Applied, as in Figures 8 and 9
From Fast Recovery Mode		0.1		ms	
From Reference Standby Mode		1		ms	
From Total Shutdown Mode		3		ms	
From Power-Off Condition		15		ms	

NOTES

[1]Input Signal Characteristics defined as follows, with 4 dB CDS gain:

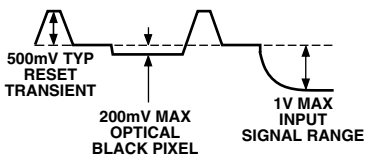

Specifications subject to change without notice.

AD9840A–SPECIFICATIONS

AUX1-MODE SPECIFICATIONS (T_{MIN} to T_{MAX}, AVDD = DVDD = 3.0 V, $f_{DATACLK}$ = 40 MHz, unless otherwise noted.)

Parameter	Min	Typ	Max	Unit
POWER CONSUMPTION		105		mW
MAXIMUM CLOCK RATE	40			MHz
INPUT BUFFER				
Gain		0		dB
Max Input Range	1.0			V p-p
VGA				
Max Output Range	2.0			V p-p
Gain Control Resolution		1023		Steps
Gain (Selected Using VGA Gain Register)				
Min Gain		0		dB
Max Gain		36		dB

Specifications subject to change without notice.

AUX2-MODE SPECIFICATIONS (T_{MIN} to T_{MAX}, AVDD = DVDD = 3.0 V, $f_{DATACLK}$ = 40 MHz, unless otherwise noted.)

Parameter	Min	Typ	Max	Unit
POWER CONSUMPTION		105		mW
MAXIMUM CLOCK RATE	40			MHz
INPUT BUFFER		(Same as AUX1-MODE)		
VGA				
Max Output Range	2.0			V p-p
Gain Control Resolution		512		Steps
Gain (Selected Using VGA Gain Register)				
Min Gain		0		dB
Max Gain		18		dB
ACTIVE CLAMP				
Clamp Level Resolution		256		Steps
Clamp Level (Measured at ADC Output)				
Min Clamp Level		0		LSB
Max Clamp Level		63.75		LSB

Specification subject to change without notice.

TIMING SPECIFICATIONS

(C_L = 20 pF, f_{SAMP} = 40 MHz, CCD-Mode Timing in Figures 5 and 6, AUX-Mode Timing in Figure 7. Serial Timing in Figures 8–10.)

Parameter	Symbol	Min	Typ	Max	Unit
SAMPLE CLOCKS					
DATACLK, SHP, SHD Clock Period	t_{CP}	25			ns
DATACLK Hi/Low Pulsewidth	t_{ADC}	10	12.5		ns
SHP Pulsewidth	t_{SHP}	5	6		ns
SHD Pulsewidth	t_{SHD}	5	6		ns
CLPDM Pulsewidth	t_{CDM}	4	10		Pixels
CLPOB Pulsewidth[1]	t_{COB}	2	20		Pixels
SHP Rising Edge to SHD Falling Edge	t_{S1}	0	6		ns
SHP Rising Edge to SHD Rising Edge	t_{S2}	10	12.5		ns
Internal Clock Delay	t_{ID}		3.0		ns
Inhibited Clock Period	t_{INH}	10			ns
DATA OUTPUTS					
Output Delay	t_{OD}		14.5	16	ns
Output Hold Time	t_H	7.0	7.6		ns
Pipeline Delay			9		Cycles
SERIAL INTERFACE					
Maximum SCK Frequency	f_{SCLK}	10			MHz
SL to SCK Setup Time	t_{LS}	10			ns
SCK to SL Hold Time	t_{LH}	10			ns
SDATA Valid to SCK Rising Edge Setup	t_{DS}	10			ns
SCK Falling Edge to SDATA Valid Hold	t_{DH}	10			ns
SCK Falling Edge to SDATA Valid Read	t_{DV}	10			ns

NOTES

[1]Minimum CLPOB pulsewidth is for functional operation only. Wider typical pulses are recommended to achieve low noise clamp performance.

Specifications subject to change without notice.

ABSOLUTE MAXIMUM RATINGS

Parameter	With Respect To	Min	Max	Unit
AVDD1, AVDD2	AVSS	–0.3	+3.9	V
DVDD1, DVDD2	DVSS	–0.3	+3.9	V
DRVDD	DRVSS	–0.3	+3.9	V
Digital Outputs	DRVSS	–0.3	DRVDD + 0.3	V
SHP, SHD, DATACLK	DVSS	–0.3	DVDD + 0.3	V
CLPOB, CLPDM, PBLK	DVSS	–0.3	DVDD + 0.3	V
SCK, SL, SDATA	DVSS	–0.3	DVDD + 0.3	V
VRT, VRB, CMLEVEL	AVSS	–0.3	AVDD + 0.3	V
BYP1-4, CCDIN	AVSS	–0.3	AVDD + 0.3	V
Junction Temperature			150	°C
Lead Temperature (10 sec)			300	°C

ORDERING GUIDE

Model	Temperature Range	Package Description	Package Option
AD9840AJST	–20°C to +85°C	Thin Plastic Quad Flatpack (LQFP)	ST-48

THERMAL CHARACTERISTICS

Thermal Resistance

48-Lead LQFP Package

θ_{JA} = 92°C

CAUTION

ESD (electrostatic discharge) sensitive device. Electrostatic charges as high as 4000 V readily accumulate on the human body and test equipment and can discharge without detection. Although the AD9840A features proprietary ESD protection circuitry, permanent damage may occur on devices subjected to high-energy electrostatic discharges. Therefore, proper ESD precautions are recommended to avoid performance degradation or loss of functionality.



PIN CONFIGURATION

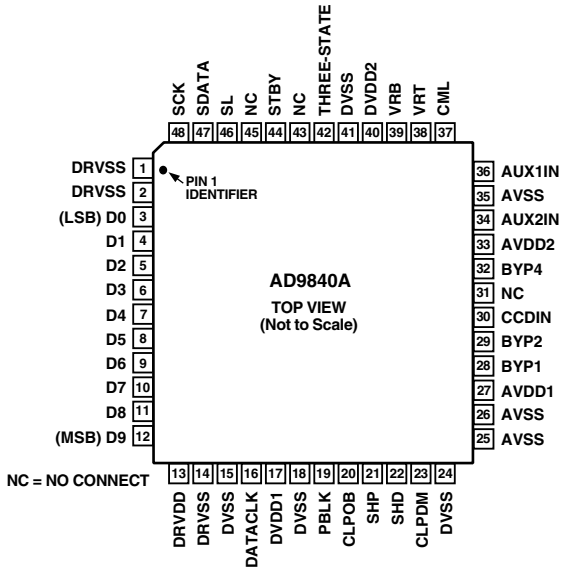

PIN FUNCTION DESCRIPTIONS

Pin Number	Name	Type	Description
1, 2	DRVSS	P	Digital Driver Ground
3–12	D0–D9	DO	Digital Data Outputs
13	DRVDD	P	Digital Output Driver Supply
14	DRVSS	P	Digital Output Driver Ground
15, 18, 24, 41	DVSS	P	Digital Ground
16	DATACLK	DI	Digital Data Output Latch Clock
17	DVDD1	P	Digital Supply
19	PBLK	DI	Preblanking Clock Input
20	CLPOB	DI	Black Level Clamp Clock Input
21	SHP	DI	CDS Sampling Clock for CCD's Reference Level
22	SHD	DI	CDS Sampling Clock for CCD's Data Level
23	CLPDM	DI	Input Clamp Clock Input
25, 26, 35	AVSS	P	Analog Ground
27	AVDD1	P	Analog Supply
28	BYP1	AO	Internal Bias Level. Decoupling
29	BYP2	AO	Internal Bias Level Decoupling
30	CCDIN	AI	Analog Input for CCD Signal
31	NC	NC	Leave Floating or Decouple to Ground with 0.1 μF
32	BYP4	AO	Internal Bias Level Decoupling
33	AVDD2	P	Analog Supply
34	AUX2IN	AI	Analog Input
36	AUX1IN	AI	Analog Input
37	CML	AO	Internal Bias Level Decoupling
38	VRT	AO	A/D Converter Top Reference Voltage Decoupling
39	VRB	AO	A/D Converter Bottom Reference Voltage Decoupling
40	DVDD2	P	Digital Supply
42	THREE-STATE	DI	Digital Output Disable. Active High
43	NC	NC	May be tied High or Low. Should not be left floating.
44	STBY	DI	Standby Mode, Active High. Same as Serial Interface Standby Mode
45	NC	NC	Internally Not Connected. May be tied high or low
46	SL	DI	Serial Digital Interface Load Pulse
47	SDATA	DI	Serial Digital Interface Data
48	SCK	DI	Serial Digital Interface Clock

TYPE: AI = Analog Input, AO = Analog Output, DI = Digital Input, DO = Digital Output, P = Power.

DEFINITIONS OF SPECIFICATIONS

DIFFERENTIAL NONLINEARITY (DNL)

An ideal ADC exhibits code transitions that are exactly 1 LSB apart. DNL is the deviation from this ideal value. Thus every code must have a finite width. No missing codes guaranteed to 10-bit resolution indicates that all 1024 codes, respectively, must be present over all operating conditions.

PEAK NONLINEARITY

Peak nonlinearity, a full signal chain specification, refers to the peak deviation of the output of the AD9840A from a true straight line. The point used as "zero scale" occurs 1/2 LSB before the first code transition. "Positive full scale" is defined as a Level 1, 1/2 LSB beyond the last code transition. The deviation is measured from the middle of each particular output code to the true straight line. The error is then expressed as a percentage of the 2 V ADC full-scale signal. The input signal is always appropriately gained up to fill the ADC's full-scale range.

TOTAL OUTPUT NOISE

The rms output noise is measured using histogram techniques. The standard deviation of the ADC output codes is calculated in LSB, and represents the rms noise level of the total signal chain at the specified gain setting. The output noise can be converted to an equivalent voltage, using the relationship 1 LSB = (ADC Full Scale/2^N codes) when N is the bit resolution of the ADC. For the AD9840A, 1 LSB is 2 mV.

POWER SUPPLY REJECTION (PSR)

The PSR is measured with a step change applied to the supply pins. This represents a very high-frequency disturbance on the AD9840A's power supply. The PSR specification is calculated from the change in the data outputs for a given step change in the supply voltage.

INTERNAL DELAY FOR SHP/SHD

The internal delay (also called aperture delay) is the time delay that occurs from when a sampling edge is applied to the AD9840A until the actual sample of the input signal is held. Both SHP and SHD sample the input signal during the transition from low to high, so the internal delay is measured from each clock's rising edge to the instant the actual internal sample is taken.

EQUIVALENT INPUT CIRCUITS

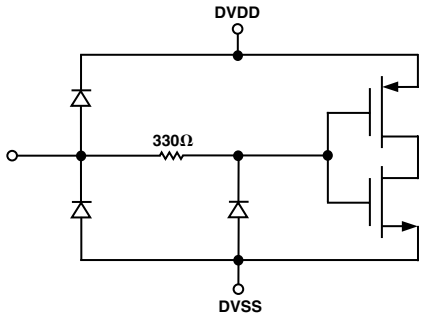

Figure 1. Digital Inputs—SHP, SHD, DATACLK, CLPOB, CLPDM, HD, VD, PBLK, SCK, SL

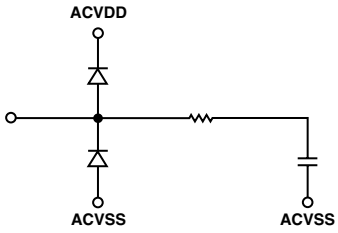

Figure 3. CCDIN (Pin 30)

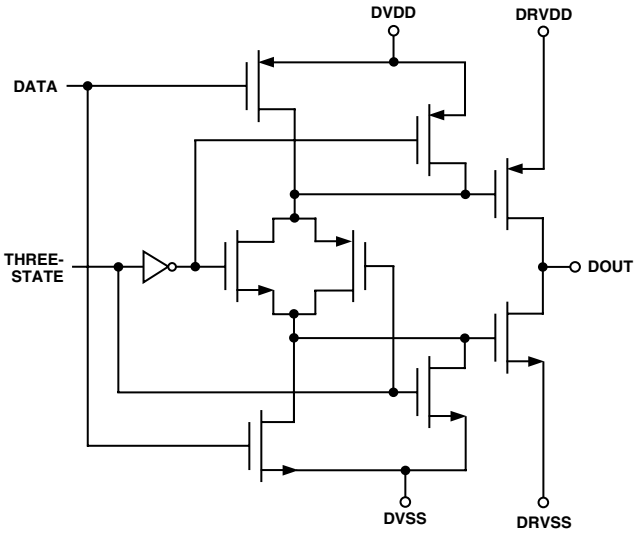

Figure 2. Data Outputs

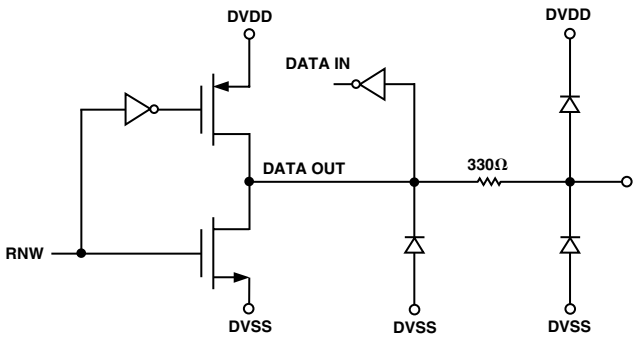

Figure 4. SDATA (Pin 47)

CCD-MODE AND AUX-MODE TIMING

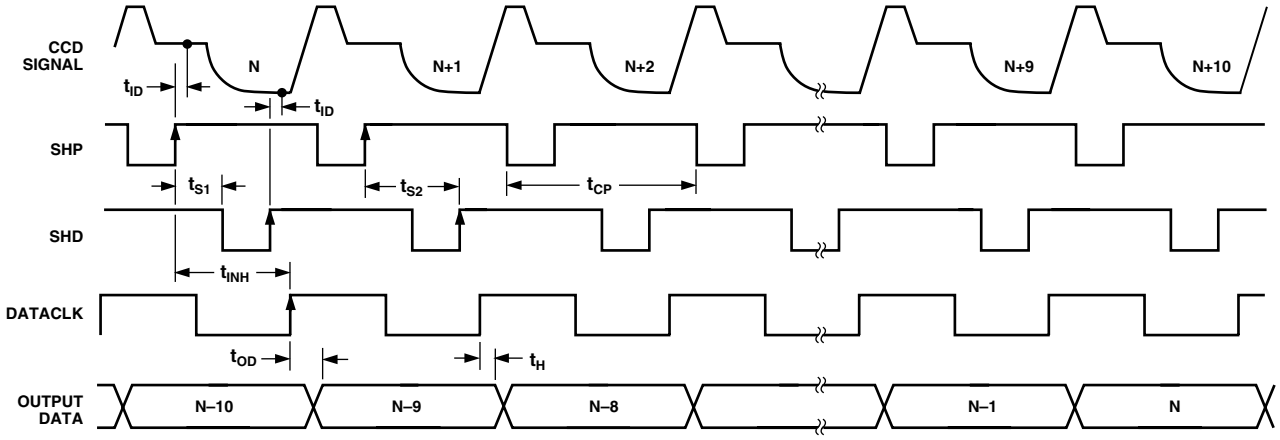

NOTES:
1. RECOMMENDED PLACEMENT FOR DATACLK RISING EDGE IS BETWEEN THE SHD RISING EDGE AND NEXT SHP FALLING EDGE.
2. CCD SIGNAL IS SAMPLED AT SHP AND SHD RISING EDGES.

Figure 5. CCD-Mode Timing

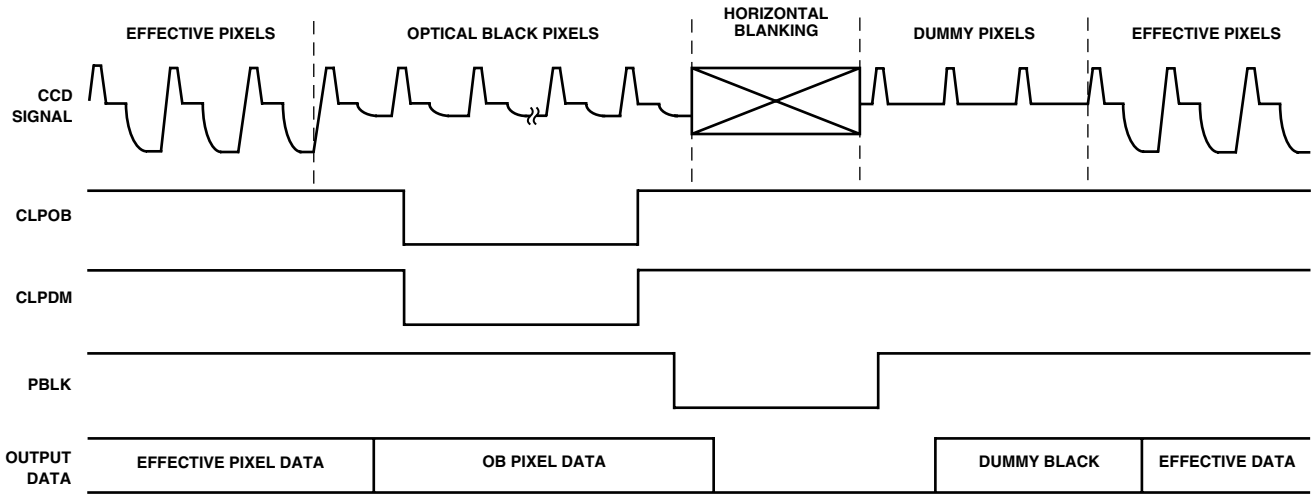

NOTES:
1. CLPOB AND CLPDM WILL OVERWRITE PBLK. PBLK WILL NOT AFFECT CLAMP OPERATION IF OVERLAPPING CLPDM AND/OR CLPOB.
2. PBLK SIGNAL IS OPTIONAL.
3. DIGITAL OUTPUT DATA WILL BE ALL ZEROS DURING PBLK. OUTPUT DATA LATENCY IS 9 DATACLK CYCLES.

Figure 6. Typical CCD-Mode Line Clamp Timing

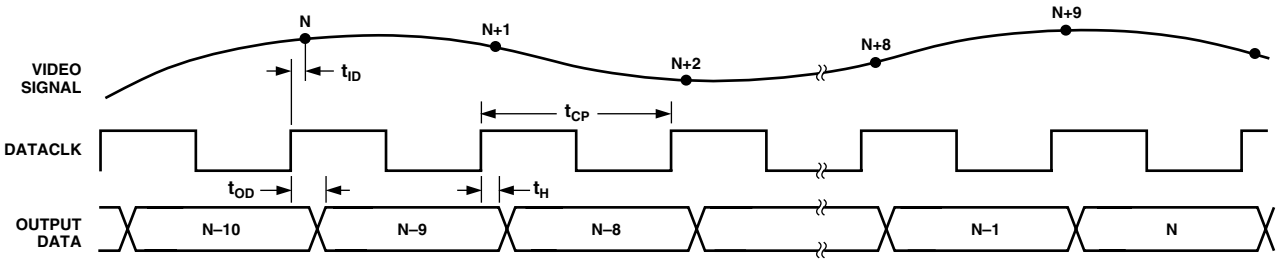

Figure 7. AUX-Mode Timing

SERIAL INTERFACE TIMING AND INTERNAL REGISTER DESCRIPTION

Table I. Internal Register Map

Register Name	Address A0	A1	A2	Data Bits D0	D1	D2	D3	D4	D5	D6	D7	D8	D9	D10
Operation	0	0	0	Channel Select CCD/AUX		Power-Down Modes		Software Reset	OB Clamp On/Off	0*	1**	0*	0*	0*
VGA Gain	1	0	0	LSB									MSB	X
Clamp Level	0	1	0	LSB							MSB	X	X	X
Control	1	1	0	0*	0*	0*	CDS Gain On/Off	Clock Polarity Select for SHP/SHD/CLP/DATA			0*	0*	Three-State	X
CDS Gain	0	0	1	LSB					MSB	X	X	X	X	X

*Internal use only, must be set to zero. **Should be set to one.

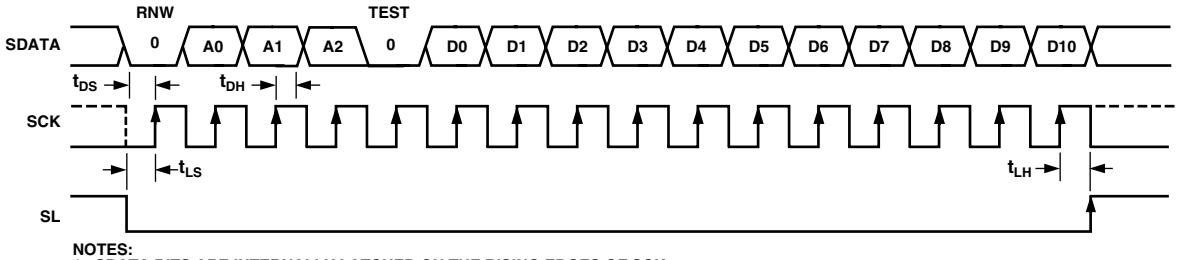

NOTES:
1. SDATA BITS ARE INTERNALLY LATCHED ON THE RISING EDGES OF SCK.
2. RNW = READ-NOT WRITE. SET LOW FOR WRITE OPERATION.
3. TEST BIT = INTERNAL USE ONLY. MUST BE SET LOW.
4. SYSTEM UPDATE OF LOADED REGISTERS OCCURS ON SL RISING EDGE.

Figure 8. Serial Write Operation

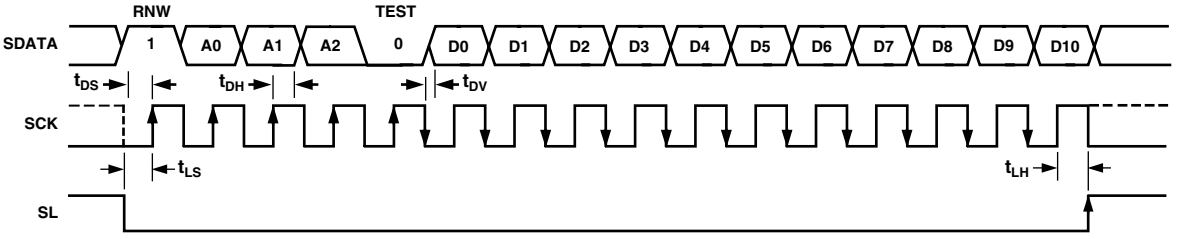

NOTES:
1. RNW = READ-NOT WRITE. SET HIGH FOR READ OPERATION.
2. TEST BITS = INTERNAL USE ONLY. MUST BE SET LOW.
3. SERIAL DATA FROM THE SELECTED REGISTER IS VALID STARTING AFTER THE 5TH SCK FALLING EDGE, AND IS UPDATED ON SCK FALLING EDGES.

Figure 9. Serial Readback Operation

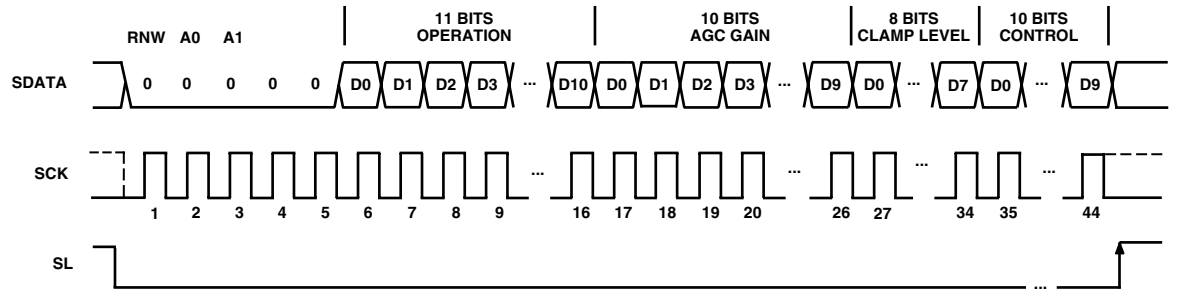

NOTES:
1. ANY NUMBER OF ADJACENT REGISTERS MAY BE LOADED SEQUENTIALLY, BEGINNING WITH THE LOWEST ADDRESS AND INCREMENTING ONE ADDRESS AT A TIME.
2. WHEN SEQUENTIALLY LOADING MULTIPLE REGISTERS, THE EXACT REGISTER LENGTH (SHOWN ABOVE) MUST BE USED FOR EACH REGISTER.
3. ALL LOADED REGISTERS WILL BE SIMULTANEOUSLY UPDATED WITH THE RISING EDGE OF SL.

Figure 10. Continuous Serial Write Operation to Multiple Registers

Table II. Operation Register Contents (Default Value x000)

D10	D9	D8	D7	D6	Optical Black Clamp D5	Reset D4	Power-Down Modes D3 D2	Channel Selection D1 D0
0*	0*	0*	1**	0*	0 Enable Clamping 1 Disable Clamping	0 Normal 1 Reset all Registers to Default	0 0 Normal Power 0 1 Fast Recovery 1 0 Standby 1 1 Total Power-Down	0 0 CCD-Mode 0 1 AUX1-Mode 1 0 AUX2-Mode 1 1 Test Only

*Must be set to zero. **Set to one.

Table III. VGA Gain Register Contents (Default Value x096)

D10	MSB D9	D8	D7	D6	D5	D4	D3	D2	D1	LSB D0	Gain (dB)
X	0	0	0	1	0	1	1	1	1	1	2.0
						•					•
						•					•
						•					•
	1	1	1	1	1	1	1	1	1	0	35.965
	1	1	1	1	1	1	1	1	1	1	36.0

Table IV. Clamp Level Register Contents (Default Value x080)

D10	D9	D8	MSB D7	D6	D5	D4	D3	D2	D1	LSB D0	Clamp Level (LSB)
X	X	X	0	0	0	0	0	0	0	0	0
			0	0	0	0	0	0	0	1	0.25
			0	0	0	0	0	0	1	0	0.5
						•					•
						•					•
						•					•
			1	1	1	1	1	1	1	0	63.5
			1	1	1	1	1	1	1	1	63.75

Table V. Control Register Contents (Default Value x000)

D10	Data Out D9	D8	D7	DATACLK D6	CLP/PBLK D5	SHP/SHD D4	CDS Gain D3	D2	D1	D0
X	0 Enable 1 Three-State	0*	0*	0 Rising Edge Trigger 1 Falling Edge Trigger	0 Active Low 1 Active High	0 Active Low 1 Active High	0 Disabled** 1 Enabled	0*	0*	0*

*Must be set to zero.
**When D3 = 0 (CDS Gain Disabled), the CDS Gain Register is fixed at 4 dB (code 63 dec).

Table VI. CDS Gain Register Contents (Default Value x000)

D10	D9	D8	D7	D6	MSB D5	D4	D3	D2	D1	LSB D0	Gain (dB) *
X	X	X	X	X	0	0	0	0	0	0	+4.3
							•				•
							•				•
							•				•
					0	1	1	1	1	0	+10.0
					1	0	0	0	0	0	–2.0
							•				•
							•				•
							•				•
					1	1	1	1	1	1	+4.0

*Control Register Bit D3 must be set high for the CDS Gain Register to be used.

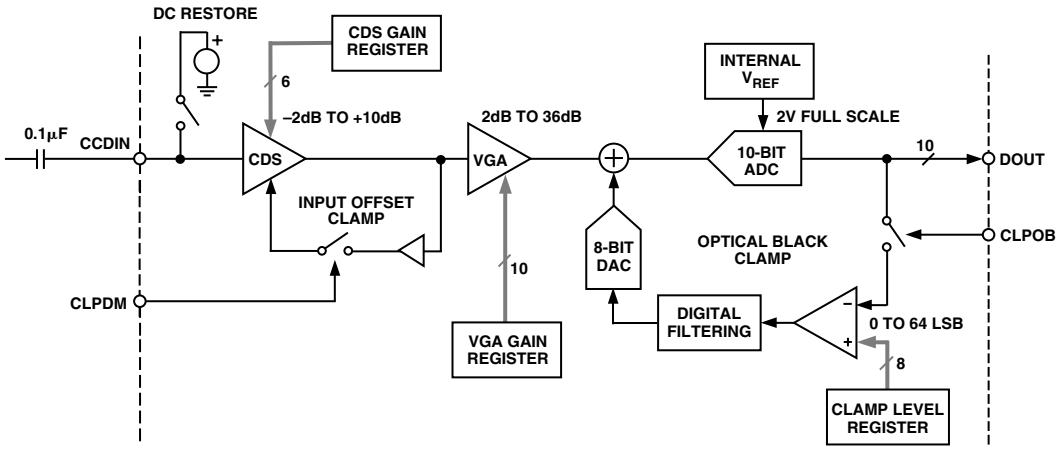

Figure 11. CCD-Mode Block Diagram

CIRCUIT DESCRIPTION AND OPERATION

The AD9840A signal processing chain is shown in Figure 11. Each processing step is essential in achieving a high-quality image from the raw CCD pixel data.

DC Restore

To reduce the large dc offset of the CCD output signal, a dc-restore circuit is used with an external 0.1 µF series-coupling capacitor. This restores the dc level of the CCD signal to approximately 1.5 V, to be compatible with the 3 V single supply of the AD9840A.

Correlated Double Sampler

The CDS circuit samples each CCD pixel twice to extract the video information and reject low-frequency noise. The timing shown in Figure 5 illustrates how the two CDS clocks, SHP and SHD, are used to sample the reference level and data level of the CCD signal respectively. The CCD signal is sampled on the rising edges of SHP and SHD. Placement of these two clock signals is critical in achieving the best performance from the CCD. An internal SHP/SHD delay (t_{ID}) of 3 ns is caused by internal propagation delays.

The CDS stage has a default gain of 4 dB, but uses a unique architecture that allows the CDS gain to be varied. Using the CDS Gain Register, the gain-of is programmable from –2 dB to +10 dB in 64 steps, using two's complement coding. The CDS Gain curve is shown in Figure 12. To change the gain of the CDS using the CDS Gain Register, the Control Register bit D3 must be set high (CDS Gain Enabled). The default gain setting when bit Control Register Bit D3 is low (CDS Gain Disabled) is 4 dB. See Tables V and VI for more details.

A CDS gain of 4 dB provides some front-end signal gain and improves the overall signal-to-noise ratio. This gain setting works very well in most applications, and the CCD-Mode Specifications use this default gain setting. However, the CDS gain may be varied to optimize the AD9840A operation in a particular application. Increased CDS gain can be useful with low output level CCDs, while decreased CDS gain allows the AD9840A to accept CCD signal swings greater than 1 V p-p. Table VII summarizes some example CDS gain settings for different maximum signal swings. The CDS Gain Register may also be used "on the fly" to provide a +6 dB boost or –6 dB attenuation when setting exposure levels. It is best to keep the CDS *output* level from exceeding 1.5 V–1.6 V.

Table VII. Example CDS Gain Settings

Max Input Signal	Recommended Gain Range	Register Code Range
250 mV p-p	8 dB to 10 dB	21 to 31
500 mV p-p	6 dB to 8 dB	10 to 21
800 mV p-p	4 dB to 6 dB	63 to 10
1 V p-p	2 dB to 4 dB	53 to 63
1.25 V p-p	0 dB to 2 dB	42 to 53
1.5 V p-p	–2 dB to 0 dB	32 to 42

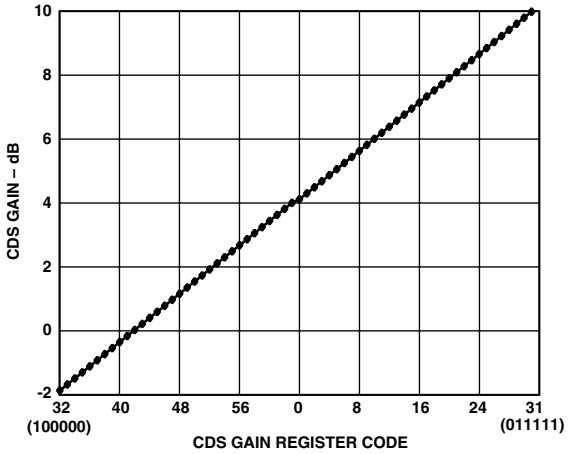

Figure 12. CDS Gain Curve

Input Clamp

A line-rate input clamping circuit is used to remove the CCD's optical black offset. This offset exists in the CCD's shielded black reference pixels. Unlike some AFE architectures, the AD9840A removes this offset in the input stage to minimize the effect of a gain change on the system black level, usually called the "gain step." Another advantage of removing this offset at the input stage is to maximize system headroom. Some area CCDs have large black level offset voltages, which, if not corrected at the input stage, can significantly reduce the available headroom in the internal circuitry when higher VGA gain settings are used.

Horizontal timing is shown in Figure 6. It is recommended that the CLPDM pulse be used during valid CCD dark pixels. CLPDM may be used during the optical black pixels, either

together with CLPOB or separately. The CLPDM pulse should be a minimum of four pixels wide.

Variable Gain Amplifier

The VGA stage provides a gain range of 2 dB to 36 dB, programmable with 10-bit resolution through the serial digital interface. Combined with the typical 4 dB gain from the CDS stage, the total gain range for the AD9840A is 6 dB to 40 dB. A gain of 6 dB will match a 1 V input signal with the ADC full-scale range of 2 V. When compared to 1 V full-scale systems (such as ADI's AD9803), the equivalent gain range is 0 dB to 34 dB.

The VGA gain curve is divided into two separate regions. When the VGA Gain Register code is between 0 and 511, the curve follows a $(1 + x)/(1 - x)$ shape, which is similar to a "linear-in-dB" characteristic. From code 512 to code 1023, the curve follows a "linear-in-dB" shape. The exact VGA gain can be calculated for any Gain Register value by using the following two equations:

Code Range	Gain Equation (dB)
0–511	$Gain = 20 \log_{10} ([658 + code]/[658 - code]) - 0.35$
512–1023	$Gain = (0.0354)(code) - 0.35$

Using these two equations, the actual gain of the AD9840A can be accurately predicted to within ±0.5 dB. As shown in the CCD-Mode Specifications, only the VGA gain range from 2 dB to 36 dB is specified. This corresponds to a VGA gain code range of 91 to 1023. The Gain Accuracy specifications also include a CDS gain of 4 dB, for a total gain range of 6 dB to 40 dB.

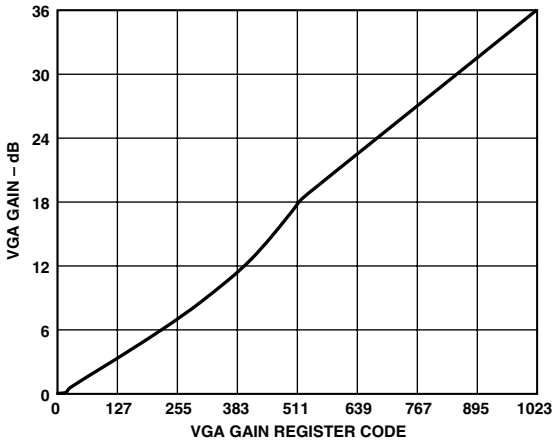

Figure 13. VGA Gain Curve (Gain from CDS Not Included)

Optical Black Clamp

The optical black clamp loop is used to remove residual offsets in the signal chain, and to track low-frequency variations in the CCD's black level. During the optical black (shielded) pixel interval on each line, the ADC output is compared with a fixed black level reference, selected by the user in the Clamp Level Register. Any value between 0 LSB and 64 LSB may be programmed, with 8-bit resolution. The resulting error signal is filtered to reduce noise, and the correction value is applied to the ADC input through a D/A converter. Normally, the optical black clamp loop is turned on once per horizontal line, but this loop can be updated more slowly to suit a particular application. If external digital clamping is used during the post processing, the AD9840A's optical black clamping may be disabled using Bit D5 in the Operation Register (see Serial Interface Timing and Internal Register Description section). When the loop is disabled, the Clamp Level Register may still be used to provide programmable offset adjustment.

Horizontal timing is shown in Figure 6. The CLPOB pulse should be placed during the CCD's optical black pixels. It is recommended that the CLPOB pulse duration be at least 20 pixels wide to minimize clamp noise. Shorter pulsewidths may be used, but clamp noise may increase, and the loop's ability to track low-frequency variations in the black level will be reduced.

A/D Converter

The AD9840A uses a high-performance ADC architecture, optimized for high speed and low power. Differential nonlinearity (DNL) performance is typically better than 0.5 LSB. Instead of the 1 V full-scale range used by the earlier AD9801 and AD9803 products from Analog Devices, the AD9840A's ADC uses a 2 V input range. Better noise performance results from using a larger ADC full-scale range.

AUX1-Mode

For applications that do not require CDS, the AD9840A can be configured to sample ac-coupled waveforms. Figure 14 shows the circuit configuration for using the AUX1 channel input (Pin 36). A single 0.1 µF ac-coupling capacitor is needed between the input signal driver and the AUX1IN pin. An on-chip dc-bias circuit sets the average value of the input signal to approximately 0.4 V, which is referenced to the midscale code of the ADC. The VGA gain register provides a gain range of 0 dB to 36 dB in this mode of operation (see VGA Gain Curve, Figure 13). The VGA gains up the signal level with respect to the 0.4 V bias level. Signal levels above the bias level will be further increased to a higher ADC code, while signal levels below the bias level will be further decreased to a lower ADC code.

AUX2-Mode

For sampling video-type waveforms, such as NTSC and PAL signals, the AUX2 channel provides black level clamping, gain adjustment, and A/D conversion. Figure 15 shows the circuit configuration for using the AUX2 channel input (Pin 34). An external 0.1 µF blocking capacitor is used with the on-chip video clamp circuit, to level-shift the input signal to a desired reference level. The clamp circuit automatically senses the most negative portion of the input signal, and adjusts the voltage across the input capacitor. This forces the black level of the input signal to be equal to the value programmed into the Clamp Level register (see Serial Interface Register Description). The VGA provides gain adjustment from 0 dB to 18 dB. The same VGA Gain register is used, but only the 9 MSBs of the gain register are used (see Table VIII.)

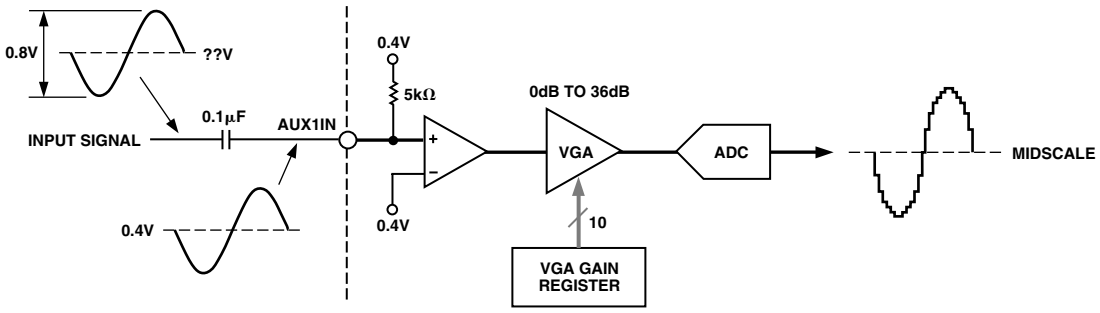

Figure 14. AUX1 Circuit Configuration

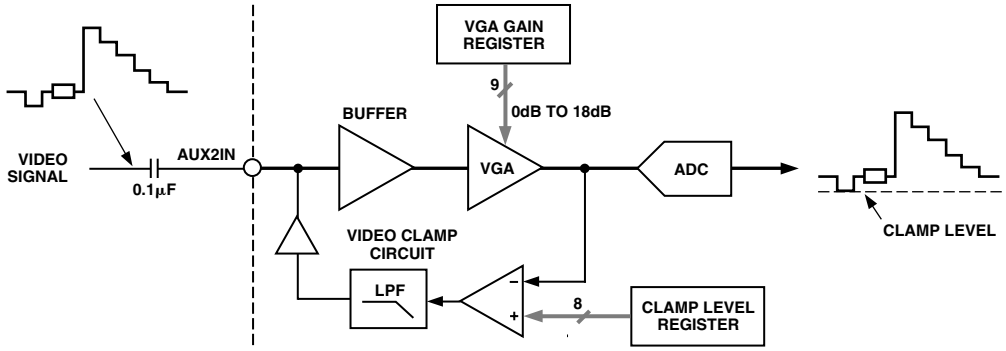

Figure 15. AUX2 Circuit Configuration

Table VIII. VGA Gain Register Used for AUX2-Mode

D10	MSB D9	D8	D7	D6	D5	D4	D3	D2	D1	LSB D0	Gain (dB)
X	0	X	X	X	X	X	X	X	X	X	0.0
	1	0	0	0	0	0	0	0	0	0	0.0
					•						•
					•						•
					•						•
	1	1	1	1	1	1	1	1	1	1	18.0

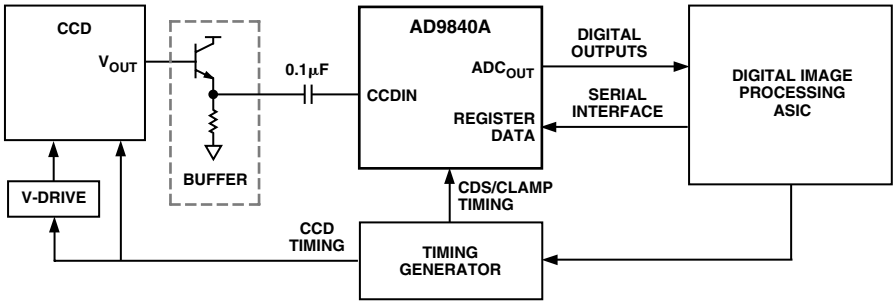

Figure 16. System Applications Diagram

APPLICATIONS INFORMATION

The AD9840A is a complete Analog Front End (AFE) product for digital still camera and camcorder applications. As shown in Figure 16, the CCD image (pixel) data is buffered and sent to the AD9840A analog input through a series input capacitor. The AD9840A performs the dc restoration, CDS, gain adjustment, black level correction, and analog-to-digital conversion. The AD9840A's digital output data is then processed by the image processing ASIC. The internal registers of the AD9840A—used to control gain, offset level, and other functions—are programmed by the ASIC or microprocessor through a 3-wire serial digital interface. A system timing generator provides the clock signals for both the CCD and the AFE.

Internal Power-On Reset Circuitry

After power-on, the AD9840A will automatically reset all internal registers and perform internal calibration procedures. This takes approximately 1 ms to complete. During this time, normal clock signals and serial write operations may occur. However, serial register writes will be ignored until the internal reset operation is completed. Pin 43 (formerly RSTB on the AD9843 non-A) is no longer used for the reset operation. Toggling Pin 43 in the AD9840A will have no effect.

Grounding and Decoupling Recommendations

As shown in Figure 17, a single ground plane is recommended for the AD9840A. This ground plane should be as continuous as possible, particularly around Pins 25 through 39. This will ensure that all analog decoupling capacitors provide the lowest possible impedance path between the power and bypass pins and their respective ground pins. All decoupling capacitors should be located as close as possible to the package pins. A single clean power supply is recommended for the AD9840A, but a separate digital driver supply may be used for DRVDD (Pin 13). DRVDD should always be decoupled to DRVSS (Pin 14), which should be connected to the analog ground plane. Advantages of using a separate digital driver supply include using a lower voltage (2.7 V) to match levels with a 2.7 V ASIC, reducing digital power dissipation, and reducing potential noise coupling. If the digital outputs (Pins 3–12) must drive a load larger than 20 pF, buffering is recommended to reduce digital code transition noise. Alternatively, placing series resistors close to the digital output pins may help reduce noise.

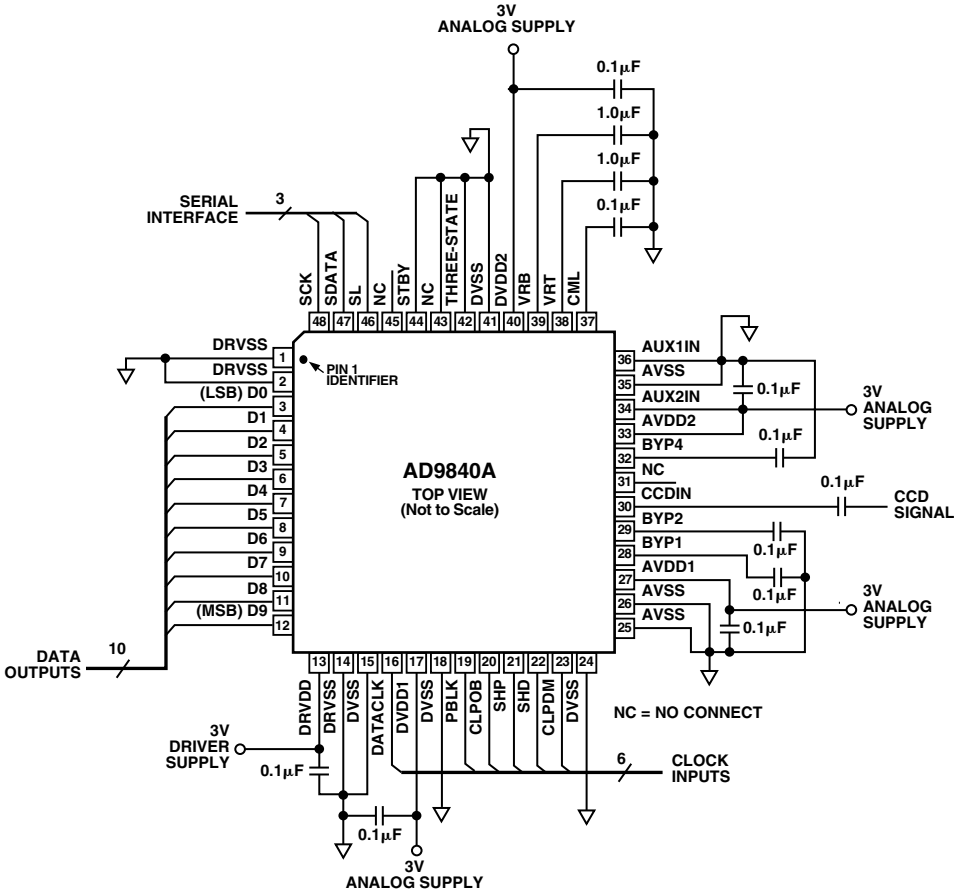

Figure 17. Recommended Circuit Configuration for CCD-Mode

OUTLINE DIMENSIONS

Dimensions shown in inches and (mm).

48-Lead LQFP
(ST-48)

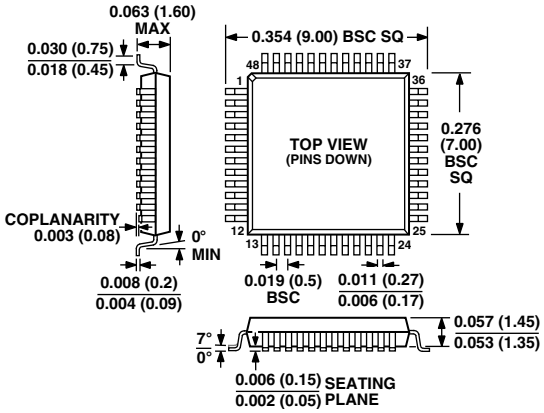

C02196–0–10/00 (rev. 0)

PRINTED IN U.S.A.