12-Output Clock Generator with Integrated 2.8 GHz VCO

Data Sheet

AD9517-0

FEATURES

- Low phase noise, phase-locked loop (PLL)
  - On-chip VCO tunes from 2.55 GHz to 2.95 GHz
  - External VCO/VCXO to 2.4 GHz optional
  - 1 differential or 2 single-ended reference inputs
  - Reference monitoring capability
  - Automatic revertive and manual reference switchover/holdover modes
  - Accepts LVPECL, LVDS, or CMOS references to 250 MHz
  - Programmable delays in path to PFD
  - Digital or analog lock detect, selectable
- 2 pairs of 1.6 GHz LVPECL outputs
  - Each output pair shares a 1-to-32 divider with coarse phase delay
  - Additive output jitter: 225 fs rms
  - Channel-to-channel skew paired outputs of <10 ps
- 2 pairs of 800 MHz LVDS clock outputs
  - Each output pair shares two cascaded 1-to-32 dividers with coarse phase delay
  - Additive output jitter: 275 fs rms
  - Fine delay adjust (Δt) on each LVDS output
  - Each LVDS output can be reconfigured as two 250 MHz CMOS outputs
- Automatic synchronization of all outputs on power-up
- Manual output synchronization available
- Available in a 48-lead LFCSP

APPLICATIONS

- Low jitter, low phase noise clock distribution
- 10/40/100 Gb/sec networking line cards, including SONET, Synchronous Ethernet, OTU2/3/4
- Forward error correction (G.710)
- Clocking high speed ADCs, DACs, DDSs, DDCs, DUCs, MxFEs
- High performance wireless transceivers
- ATE and high performance instrumentation

GENERAL DESCRIPTION

The AD9517-0[1] provides a multi-output clock distribution function with subpicosecond jitter performance, along with an on-chip PLL and VCO. The on-chip VCO tunes from 2.55 GHz to 2.95 GHz. Optionally, an external VCO/VCXO of up to 2.4 GHz can be used.

The AD9517-0 emphasizes low jitter and phase noise to maximize data converter performance, and it can benefit other applications with demanding phase noise and jitter requirements.

FUNCTIONAL BLOCK DIAGRAM

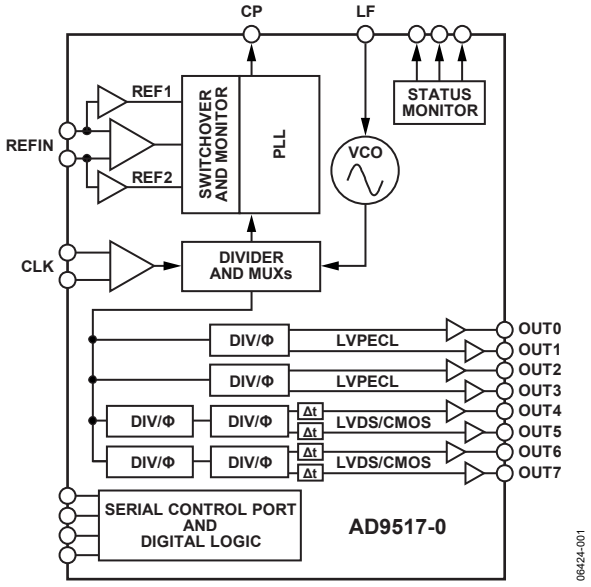

Figure 1.

The AD9517-0 features four LVPECL outputs (in two pairs) and four LVDS outputs (in two pairs). Each LVDS output can be reconfigured as two CMOS outputs. The LVPECL outputs operate to 1.6 GHz, the LVDS outputs operate to 800 MHz, and the CMOS outputs operate to 250 MHz.

For applications that require additional outputs, a crystal reference input, zero-delay, or EEPROM for automatic configuration at startup, the AD9520 and AD9522 are available. In addition, the AD9516 and AD9518 are similar to the AD9517 but have a different combination of outputs.

Each pair of outputs has dividers that allow both the divide ratio and coarse delay (or phase) to be set. The range of division for the LVPECL outputs is 1 to 32. The LVDS/CMOS outputs allow a range of divisions up to a maximum of 1024.

The AD9517-0 is available in a 48-lead LFCSP and can be operated from a single 3.3 V supply. An external VCO, which requires an extended voltage range, can be accommodated by connecting the charge pump supply (VCP) to 5 V. A separate LVPECL power supply can be from 2.5 V to 3.3 V (nominal).

The AD9517-0 is specified for operation over the industrial range of −40°C to +85°C.

[1] AD9517 is used throughout the data sheet to refer to all the members of the AD9517 family. However, when AD9517-0 is used, it refers to that specific member of the AD9517 family.

Rev. F
Document Feedback
Information furnished by Analog Devices is believed to be accurate and reliable. However, no responsibility is assumed by Analog Devices for its use, nor for any infringements of patents or other rights of third parties that may result from its use. Specifications subject to change without notice. No license is granted by implication or otherwise under any patent or patent rights of Analog Devices. Trademarks and registered trademarks are the property of their respective owners.

One Technology Way, P.O. Box 9106, Norwood, MA 02062-9106, U.S.A.
Tel: 781.329.4700 ©2007–2020 Analog Devices, Inc. All rights reserved.
Technical Support www.analog.com

TABLE OF CONTENTS

Features ... 1
Applications ... 1
General Description ... 1
Functional Block Diagram ... 1
Revision History ... 3
Specifications ... 4
Power Supply Requirements ... 4
PLL Characteristics ... 4
Clock Inputs ... 6
Clock Outputs ... 6
Timing Characteristics ... 8
Clock Output Additive Phase Noise (Distribution Only; VCO Divider Not Used) ... 9
Clock Output Absolute Phase Noise (Internal VCO Used) ... 10
Clock Output Absolute Time Jitter (Clock Generation Using Internal VCO) ... 11
Clock Output Absolute Time Jitter (Clock Cleanup Using Internal VCO) ... 11
Clock Output Absolute Time Jitter (Clock Generation Using External VCXO) ... 11
Clock Output Additive Time Jitter (VCO Divider Not Used) ... 12
Clock Output Additive Time Jitter (VCO Divider Used) ... 12
Delay Block Additive Time Jitter ... 13
Serial Control Port ... 13
$\overline{\text{PD}}$, $\overline{\text{SYNC}}$, and $\overline{\text{RESET}}$ Pins ... 14
LD, STATUS, and REFMON Pins ... 14
Power Dissipation ... 15
Timing Diagrams ... 16
Absolute Maximum Ratings ... 17
Thermal Resistance ... 17
ESD Caution ... 17
Pin Configuration and Function Descriptions ... 18
Typical Performance Characteristics ... 20
Terminology ... 26
Detailed Block Diagram ... 27
Theory of Operation ... 28
Operational Configurations ... 28
Digital Lock Detect (DLD) ... 37
Clock Distribution ... 41
Reset Modes ... 49
Power-Down Modes ... 50
Serial Control Port ... 51
Serial Control Port Pin Descriptions ... 51
General Operation of Serial Control Port ... 51
The Instruction Word (16 Bits) ... 52
MSB/LSB First Transfers ... 52
Thermal Performance ... 55
Control Registers ... 56
Control Register Map Overview ... 56
Control Register Map Descriptions ... 59
Applications Information ... 76
Frequency Planning Using the AD9517 ... 76
Using the AD9517 Outputs for ADC Clock Applications ... 76
LVPECL Clock Distribution ... 77
LVDS Clock Distribution ... 77
CMOS Clock Distribution ... 78
Outline Dimensions ... 79
Ordering Guide ... 79

REVISION HISTORY

9/2020—Rev. E to Rev. F

Changed CP-48-8 to CP-48-9 ..... Throughout
Changes to Figure 6 18
Updated Outline Dimensions 79
Changes to Ordering Guide 79

2/2013—Rev. D to Rev. E

Changes to Table 52 57
Changes to Table 57 70

1/2012—Rev. C to Rev. D

Changes to Table 62 75

5/2011—Rev. B to Rev. C

Changes to Features, Applications, and General Description Sections 1
Change to CPRSET Pin Resistor Parameter, Table 1 4
Changes to Table 2 4
Changes to Table 4 6
Changes to Logic 1 Current and Logic 0 Current Parameters, Table 15 14
Changes to Table 20 18
Change to Caption, Figure 8 20
Change to Caption, Figure 15 21
Change to Captions, Figure 25 and Figure 26 23
Added Figure 41; Renumbered Sequentially 25
Changes to On-Chip VCO Section 34
Changes to Reference Switchover Section 35
Changes to Prescaler Section and Change to Comments/Conditions Column, Table 28 36
Changes to Automatic/Internal Holdover Mode Section and Frequency Status Monitors Section 39
Changes to VCO Calibration Section 40
Changes to Clock Distribution Section 41
Changes to Write Section 51
Change to The Instruction Word (16 Bits) Section 52
Change to Figure 65 53
Change to Thermal Performance Section 55
Changes to Register Address 0x01C, Bits[4:3], Table 52 56
Changes to Address 0x017, Bits[1:0] and Address 0x018, Bits[2:0], Table 54 62
Changes to Register Address 0x01C, Bits[5:1], Table 54 64
Change to LVPECL Clock Distribution Section 77

5/2010—Rev. A to Rev. B

Changes to Default Values of LVDS/CMOS Outputs Section in Table 52 56
Changes to Register 0x140, Bit 0; Register 0x142, Bit 0; Register 0x143, Bit 0 in Table 57 69
Updated Outline Dimensions, Changes to Ordering Guide 78

12/2009—Rev. 0 to Rev. A

Added 48-Lead LFCSP Package (CP-48-8) ..... Universal
Changes to Features, Applications, and General Description 1
Change to CPRSET Pin Resistor Parameter 4
Changes to Table 4 6
Changes to V_{CP} Supply Parameter 14
Changes to Table 19 16
Added Exposed Paddle Notation to Figure 6; Changes to Table 20 17
Change to High Frequency Clock Distribution—CLK or External VCO > 1600 MHz Section; Change to Table 22 27
Changes to Table 24 29
Change to Configuration and Register Settings Section 31
Change to Phase Frequency Detector (PFD) Section 32
Changes to Charge Pump (CP), On-Chip VCO, PLL External Loop Filter, and PLL Reference Inputs Sections 33
Change to Figure 46; Added Figure 47 33
Changes to Reference Switchover and VCXO/VCO Feedback Divider N—P, A, B, R Sections 34
Changes to Table 28 35
Change to Holdover Section 37
Changes to VCO Calibration Section 39
Changes to Clock Distribution Section 40
Change to Clock Frequency Division Section; Change to Table 34 41
Changes to Channel Dividers—LVDS/CMOS Outputs Section; Change to Table 39 43
Change to Write Section 50
Change to MSB/LSB First Transfers 51
Change to Figure 64 52
Added Thermal Performance Section 54
Changes to 0x003 Register Address 55
Changes to Table 53 58
Changes to Table 54 59
Changes to Table 55 65
Changes to Table 56 67
Changes to Table 57 69
Changes to Table 58 71
Changes to Table 59 72
Changes to Table 60 and Table 61 74
Added Frequency Planning Using the AD9517 Section 75
Changes to Figure 70 and Figure 72; Added Figure 71 76
Changes to LVDS Clock Distribution Section 76
Added Exposed Paddle Notation to Outline Dimensions 78
Changes to Ordering Guide 78

7/2007—Revision 0: Initial Version

SPECIFICATIONS

Typical is given for $V_S = V_{S_LVPECL} = 3.3$ V ± 5%; $V_S \le V_{CP} \le 5.25$ V; $T_A = 25°C$; $R_{SET} = 4.12$ kΩ; $CP_{RSET} = 5.1$ kΩ, unless otherwise noted. Minimum and maximum values are given over full V_S and T_A (−40°C to +85°C) variation.

POWER SUPPLY REQUIREMENTS

Table 1.

Parameter	Min	Typ	Max	Unit	Test Conditions/Comments
V_S	3.135	3.3	3.465	V	3.3 V ± 5%
V_{S_LVPECL}	2.375		V_S	V	Nominally 2.5 V to 3.3 V ± 5%
V_{CP}	V_S		5.25	V	Nominally 3.3 V to 5.0 V ± 5%
RSET Pin Resistor		4.12		kΩ	Sets internal biasing currents; connect to ground
CPRSET Pin Resistor	2.7	5.1	10	kΩ	Sets internal CP current range, nominally 4.8 mA (CP_Isb = 600 µA); actual current can be calculated by CP_Isb = 3.06/CPRSET; connect to ground
BYPASS Pin Capacitor		220		nF	Bypass for internal LDO regulator; necessary for LDO stability; connect to ground

PLL CHARACTERISTICS

Table 2.

Parameter	Min	Typ	Max	Unit	Test Conditions/Comments
VCO (ON-CHIP)					
Frequency Range	2550		2950	MHz	See Figure 15
VCO Gain (K_{VCO})		50		MHz/V	See Figure 10
Tuning Voltage (V_T)	0.5		V_{CP} − 0.5	V	$V_{CP} \le V_S$ when using internal VCO; outside of this range, the CP spurs may increase due to CP up/down mismatch
Frequency Pushing (Open Loop)		1		MHz/V	
Phase Noise at 100 kHz Offset		−105		dBc/Hz	f = 2800 MHz
Phase Noise at 1 MHz Offset		−123		dBc/Hz	f = 2800 MHz
REFERENCE INPUTS					
Differential Mode (REFIN, $\overline{\text{REFIN}}$)					Differential mode (can accommodate single-ended input by ac grounding undriven input)
Input Frequency	0		250	MHz	Frequencies below about 1 MHz should be dc-coupled; be careful to match V_{CM} (self-bias voltage)
Input Sensitivity		250		mV p-p	PLL figure of merit (FOM) increases with increasing slew rate (see Figure 14); the input sensitivity is sufficient for ac-coupled LVDS and LVPECL signals
Self-Bias Voltage, REFIN	1.35	1.60	1.75	V	Self-bias voltage of REFIN[1]
Self-Bias Voltage, $\overline{\text{REFIN}}$	1.30	1.50	1.60	V	Self-bias voltage of $\overline{\text{REFIN}}$[1]
Input Resistance, REFIN	4.0	4.8	5.9	kΩ	Self-biased[1]
Input Resistance, $\overline{\text{REFIN}}$	4.4	5.3	6.4	kΩ	Self-biased[1]
Dual Single-Ended Mode (REF1, REF2)					Two single-ended CMOS-compatible inputs
Input Frequency (AC-Coupled)	20		250	MHz	Slew rate > 50 V/µs
Input Frequency (DC-Coupled)	0		250	MHz	Slew rate > 50 V/µs; CMOS levels
Input Sensitivity (AC-Coupled)		0.8		V p-p	Should not exceed V_S p-p
Input Logic High	2.0			V	
Input Logic Low			0.8	V	
Input Current	−100		+100	µA	
Pulse Width High/Low	1.8			ns	This value determines the allowable input duty cycle and is the amount of time that a square wave is high/low
Input Capacitance		2		pF	Each pin, REFIN/$\overline{\text{REFIN}}$ (REF1/REF2)
PHASE/FREQUENCY DETECTOR (PFD)					
PFD Input Frequency			100	MHz	Antibacklash pulse width = 1.3 ns, 2.9 ns
			45	MHz	Antibacklash pulse width = 6.0 ns
Antibacklash Pulse Width		1.3		ns	Register 0x017[1:0] = 01b
		2.9		ns	Register 0x017[1:0] = 00b; Register 0x017[1:0] = 11b
		6.0		ns	Register 0x017[1:0] = 10b

Parameter	Min	Typ	Max	Unit	Test Conditions/Comments
CHARGE PUMP (CP)					CP_V is CP pin voltage; V_{CP} is charge pump power supply voltage
I_{CP} Sink/Source					Programmable
High Value		4.8		mA	With CP_{RSET} = 5.1 kΩ
Low Value		0.60		mA	
Absolute Accuracy		2.5		%	$CP_V = V_{CP}/2$ V
CP_{RSET} Range		2.7/10		kΩ	
I_{CP} High Impedance Mode Leakage		1		nA	
Sink-and-Source Current Matching		2		%	$0.5 < CP_V < V_{CP} - 0.5$ V
I_{CP} vs. CP_V		1.5		%	$0.5 < CP_V < V_{CP} - 0.5$ V
I_{CP} vs. Temperature		2		%	$CP_V = V_{CP}/2$ V
PRESCALER (PART OF N DIVIDER)					See the VCXO/VCO Feedback Divider N—P, A, B, R section
Prescaler Input Frequency					
P = 1 FD			300	MHz	
P = 2 FD			600	MHz	
P = 3 FD			900	MHz	
P = 2 DM (2/3)			200	MHz	
P = 4 DM (4/5)			1000	MHz	
P = 8 DM (8/9)			2400	MHz	
P = 16 DM (16/17)			3000	MHz	
P = 32 DM (32/33)			3000	MHz	
Prescaler Output Frequency			300	MHz	A, B counter input frequency (prescaler input frequency divided by P)
PLL DIVIDER DELAYS					Register 0x019: R, Bits[5:3]; N, Bits[2:0]; see Table 54
000		Off		ps	
001		330		ps	
010		440		ps	
011		550		ps	
100		660		ps	
101		770		ps	
110		880		ps	
111		990		ps	
NOISE CHARACTERISTICS					
In-Band Phase Noise of the Charge Pump/Phase Frequency Detector (In-Band Is Within the LBW of the PLL)					The PLL in-band phase noise floor is estimated by measuring the in-band phase noise at the output of the VCO and subtracting 20 log(N) (where N is the value of the N divider)
At 500 kHz PFD Frequency		−165		dBc/Hz	
At 1 MHz PFD Frequency		−162		dBc/Hz	
At 10 MHz PFD Frequency		−151		dBc/Hz	
At 50 MHz PFD Frequency		−143		dBc/Hz	
PLL Figure of Merit (FOM)		−220		dBc/Hz	Reference slew rate > 0.25 V/ns; FOM + 10 log(f_{PFD}) is an approximation of the PFD/CP in-band phase noise (in the flat region) inside the PLL loop bandwidth; when running closed-loop, the phase noise, as observed at the VCO output, is increased by 20 log(N)
PLL DIGITAL LOCK DETECT WINDOW[2]					Signal available at LD, STATUS, and REFMON pins when selected by appropriate register settings
Required to Lock (Coincidence of Edges)					Selected by Register 0x017[1:0] and Register 0x018[4]
Low Range (ABP 1.3 ns, 2.9 ns)		3.5		ns	Register 0x017[1:0] = 00b, 01b, 11b; Register 0x018[4] = 1b
High Range (ABP 1.3 ns, 2.9 ns)		7.5		ns	Register 0x017[1:0] = 00b, 01b, 11b; Register 0x018[4] = 0b
High Range (ABP 6.0 ns)		3.5		ns	Register 0x017[1:0] = 10b; Register 0x018[4] = 0b
To Unlock After Lock (Hysteresis)[2]					
Low Range (ABP 1.3 ns, 2.9 ns)		7		ns	Register 0x017[1:0] = 00b, 01b, 11b; Register 0x018[4] = 1b
High Range (ABP 1.3 ns, 2.9 ns)		15		ns	Register 0x017[1:0] = 00b, 01b, 11b; Register 0x018[4] = 0b
High Range (ABP 6.0 ns)		11		ns	Register 0x017[1:0] = 10b; Register 0x018[4] = 0b

[1] REFIN and $\overline{\text{REFIN}}$ self-bias points are offset slightly to avoid chatter on an open input condition.
[2] For reliable operation of the digital lock detect, the period of the PFD frequency must be greater than the unlock-after-lock time.

CLOCK INPUTS

Table 3.

Parameter	Min	Typ	Max	Unit	Test Conditions/Comments
CLOCK INPUTS (CLK, $\overline{CLK}$)					Differential input
Input Frequency	0[1]		2.4	GHz	High frequency distribution (VCO divider)
	0[1]		1.6	GHz	Distribution only (VCO divider bypassed)
Input Sensitivity, Differential		150		mV p-p	Measured at 2.4 GHz; jitter performance is improved with slew rates > 1 V/ns
Input Level, Differential			2	V p-p	Larger voltage swings may turn on the protection diodes and may degrade jitter performance
Input Common-Mode Voltage, V_{CM}	1.3	1.57	1.8	V	Self-biased; enables ac coupling
Input Common-Mode Range, V_{CMR}	1.3		1.8	V	With 200 mV p-p signal applied; dc-coupled
Input Sensitivity, Single-Ended		150		mV p-p	CLK ac-coupled; $\overline{CLK}$ ac-bypassed to RF ground
Input Resistance	3.9	4.7	5.7	kΩ	Self-biased
Input Capacitance		2		pF	

[1] Below about 1 MHz, the input should be dc-coupled. Care should be taken to match V_{CM}.

CLOCK OUTPUTS

Table 4.

Parameter	Min	Typ	Max	Unit	Test Conditions/Comments
LVPECL CLOCK OUTPUTS					Termination = 50 Ω to V_S − 2 V
OUT0, OUT1, OUT2, OUT3					Differential (OUT, $\overline{OUT}$)
Output Frequency, Maximum	2950			MHz	Using direct to output; see Figure 25 for peak-to-peak differential amplitude
Output High Voltage (V_{OH})	V_{S_LVPECL} − 1.12	V_{S_LVPECL} − 0.98	V_{S_LVPECL} − 0.84	V	
Output Low Voltage (V_{OL})	V_{S_LVPECL} − 2.03	V_{S_LVPECL} − 1.77	V_{S_LVPECL} − 1.49	V	
Output Differential Voltage (V_{OD})	550	790	980	mV	This is V_{OH} − V_{OL} for each leg of a differential pair for default amplitude setting with driver not toggling; the peak-to-peak amplitude measured using a differential probe across the differential pair with the driver toggling is roughly 2× these values (see Figure 25 for variation over frequency)
LVDS CLOCK OUTPUTS					Differential termination 100 Ω at 3.5 mA
OUT4, OUT5, OUT6, OUT7					Differential (OUT, $\overline{OUT}$)
Output Frequency			800	MHz	The AD9517 outputs toggle at higher frequencies, but the output amplitude may not meet the V_{OD} specification; see Figure 26
Output Differential Voltage (V_{OD})	247	360	454	mV	V_{OH} − V_{OL} measurement across a differential pair at the default amplitude setting with output driver not toggling; see Figure 26 for variation over frequency
Delta V_{OD}			25	mV	This is the absolute value of the difference between V_{OD} when the normal output is high vs. when the complementary output is high
Output Offset Voltage (V_{OS})	1.125	1.24	1.375	V	(V_{OH} + V_{OL})/2 across a differential pair
Delta V_{OS}			25	mV	This is the absolute value of the difference between V_{OS} when the normal output is high vs. when the complementary output is high
Short-Circuit Current (I_{SA}, I_{SB})		14	24	mA	Output shorted to GND

Parameter	Min	Typ	Max	Unit	Test Conditions/Comments
CMOS CLOCK OUTPUTS					
OUT4A, OUT4B, OUT5A, OUT5B, OUT6A, OUT6B, OUT7A, OUT7B					Single-ended; termination = 10 pF
Output Frequency			250	MHz	See Figure 27
Output Voltage					
High (V_{OH})	V_S − 0.1			V	At 1 mA load
Low (V_{OL})			0.1	V	At 1 mA load
Source Current					Exceeding these values can result in damage to the part
Static			20	mA	
Dynamic			16	mA	
Sink Current					Exceeding these values can result in damage to the part
Static			8	mA	
Dynamic			16	mA	

TIMING CHARACTERISTICS

Table 5.

Parameter	Min	Typ	Max	Unit	Test Conditions/Comments
LVPECL					Termination = 50 Ω to V_S − 2 V; level = 810 mV
Output Rise Time, t_{RP}		70	180	ps	20% to 80%, measured differentially
Output Fall Time, t_{FP}		70	180	ps	80% to 20%, measured differentially
PROPAGATION DELAY, t_{PECL}, CLK-TO-LVPECL OUTPUT					
High Frequency Clock Distribution Configuration	835	995	1180	ps	See Figure 43
Clock Distribution Configuration	773	933	1090	ps	See Figure 45
Variation with Temperature		0.8		ps/°C	
OUTPUT SKEW, LVPECL OUTPUTS[1]					
LVPECL Outputs That Share the Same Divider		5	15	ps	
LVPECL Outputs on Different Dividers		13	40	ps	
All LVPECL Outputs Across Multiple Parts			220	ps	
LVDS					Termination = 100 Ω differential; 3.5 mA
Output Rise Time, t_{RL}		170	350	ps	20% to 80%, measured differentially[2]
Output Fall Time, t_{FL}		160	350	ps	20% to 80%, measured differentially[2]
PROPAGATION DELAY, t_{LVDS}, CLK-TO-LVDS OUTPUT					Delay off on all outputs
For All Divide Values	1.4	1.8	2.1	ns	
Variation with Temperature		1.25		ps/°C	
OUTPUT SKEW, LVDS OUTPUTS[1]					Delay off on all outputs
LVDS Outputs That Share the Same Divider		6	62	ps	
LVDS Outputs on Different Dividers		25	150	ps	
All LVDS Outputs Across Multiple Parts			430	ps	
CMOS					Termination = open
Output Rise Time, t_{RC}		495	1000	ps	20% to 80%; C_{LOAD} = 10 pF
Output Fall Time, t_{FC}		475	985	ps	80% to 20%; C_{LOAD} = 10 pF
PROPAGATION DELAY, t_{CMOS}, CLK-TO-CMOS OUTPUT					Fine delay off
For All Divide Values	1.6	2.1	2.6	ns	
Variation with Temperature		2.6		ps/°C	
OUTPUT SKEW, CMOS OUTPUTS[1]					Fine delay off
CMOS Outputs That Share the Same Divider		4	66	ps	
All CMOS Outputs on Different Dividers		28	180	ps	
All CMOS Outputs Across Multiple Parts			675	ps	
DELAY ADJUST[3]					LVDS and CMOS
Shortest Delay Range[4]					Register 0x0A1 (0x0A4, 0x0A7, 0x0AA), Bits[5:0] = 101111b
Zero Scale	50	315	680	ps	Register 0x0A2 (0x0A5, 0x0A8, 0x0AB), Bits[5:0] = 000000b
Full Scale	540	880	1180	ps	Register 0x0A2 (0x0A5, 0x0A8, 0x0AB), Bits[5:0] = 101111b
Longest Delay Range[4]					Register 0x0A1 (0x0A4, 0x0A7, 0x0AA), Bits[5:0] = 000000b
Zero Scale	200	570	950	ps	Register 0x0A2 (0x0A5, 0x0A8, 0x0AB), Bits[5:0] = 000000b
Quarter Scale	1.72	2.31	2.89	ns	Register 0x0A2 (0x0A5, 0x0A8, 0x0AB), Bits[5:0] = 001100b
Full Scale	5.7	8.0	10.1	ns	Register 0x0A2 (0x0A5, 0x0A8, 0x0AB), Bits[5:0] = 101111b
Delay Variation with Temperature					
Short Delay Range[5]					
Zero Scale		0.23		ps/°C	
Full Scale		−0.02		ps/°C	
Long Delay Range[5]					
Zero Scale		0.3		ps/°C	
Full Scale		0.24		ps/°C	

[1] This is the difference between any two similar delay paths while operating at the same voltage and temperature.
[2] Corresponding CMOS drivers set to A for noninverting and B for inverting.
[3] The maximum delay that can be used is a little less than one-half the period of the clock. A longer delay disables the output.
[4] Incremental delay; does not include propagation delay.
[5] All delays between zero scale and full scale can be estimated by linear interpolation.

CLOCK OUTPUT ADDITIVE PHASE NOISE (DISTRIBUTION ONLY; VCO DIVIDER NOT USED)

Table 6.

Parameter	Min	Typ	Max	Unit	Test Conditions/Comments
CLK-TO-LVPECL ADDITIVE PHASE NOISE					Distribution section only; does not include PLL and VCO
CLK = 1 GHz, Output = 1 GHz					Input slew rate > 1 V/ns
Divider = 1					
At 10 Hz Offset		−109		dBc/Hz	
At 100 Hz Offset		−118		dBc/Hz	
At 1 kHz Offset		−130		dBc/Hz	
At 10 kHz Offset		−139		dBc/Hz	
At 100 kHz Offset		−144		dBc/Hz	
At 1 MHz Offset		−146		dBc/Hz	
At 10 MHz Offset		−147		dBc/Hz	
At 100 MHz Offset		−149		dBc/Hz	
CLK = 1 GHz, Output = 200 MHz					Input slew rate > 1 V/ns
Divider = 5					
At 10 Hz Offset		−120		dBc/Hz	
At 100 Hz Offset		−126		dBc/Hz	
At 1 kHz Offset		−139		dBc/Hz	
At 10 kHz Offset		−150		dBc/Hz	
At 100 kHz Offset		−155		dBc/Hz	
At 1 MHz Offset		−157		dBc/Hz	
>10 MHz Offset		−157		dBc/Hz	
CLK-TO-LVDS ADDITIVE PHASE NOISE					Distribution section only; does not include PLL and VCO
CLK = 1.6 GHz, Output = 800 MHz					Input slew rate > 1 V/ns
Divider = 2					
At 10 Hz Offset		−103		dBc/Hz	
At 100 Hz Offset		−110		dBc/Hz	
At 1 kHz Offset		−120		dBc/Hz	
At 10 kHz Offset		−127		dBc/Hz	
At 100 kHz Offset		−133		dBc/Hz	
At 1 MHz Offset		−138		dBc/Hz	
At 10 MHz Offset		−147		dBc/Hz	
At 100 MHz Offset		−149		dBc/Hz	
CLK = 1.6 GHz, Output = 400 MHz					Input slew rate > 1 V/ns
Divider = 4					
At 10 Hz Offset		−114		dBc/Hz	
At 100 Hz Offset		−122		dBc/Hz	
At 1 kHz Offset		−132		dBc/Hz	
At 10 kHz Offset		−140		dBc/Hz	
At 100 kHz Offset		−146		dBc/Hz	
At 1 MHz Offset		−150		dBc/Hz	
>10 MHz Offset		−155		dBc/Hz	
CLK-TO-CMOS ADDITIVE PHASE NOISE					Distribution section only; does not include PLL and VCO
CLK = 1 GHz, Output = 250 MHz					Input slew rate > 1 V/ns
Divider = 4					
At 10 Hz Offset		−110		dBc/Hz	
At 100 Hz Offset		−120		dBc/Hz	
At 1 kHz Offset		−127		dBc/Hz	
At 10 kHz Offset		−136		dBc/Hz	
At 100 kHz Offset		−144		dBc/Hz	
At 1 MHz Offset		−147		dBc/Hz	
>10 MHz Offset		−154		dBc/Hz	

Parameter	Min	Typ	Max	Unit	Test Conditions/Comments
CLK = 1 GHz, Output = 50 MHz					Input slew rate > 1 V/ns
Divider = 20					
At 10 Hz Offset		−124		dBc/Hz	
At 100 Hz Offset		−134		dBc/Hz	
At 1 kHz Offset		−142		dBc/Hz	
At 10 kHz Offset		−151		dBc/Hz	
At 100 kHz Offset		−157		dBc/Hz	
At 1 MHz Offset		−160		dBc/Hz	
>10 MHz Offset		−163		dBc/Hz	

CLOCK OUTPUT ABSOLUTE PHASE NOISE (INTERNAL VCO USED)

Table 7.

Parameter	Min	Typ	Max	Unit	Test Conditions/Comments
LVPECL ABSOLUTE PHASE NOISE					Internal VCO; direct to LVPECL output
VCO = 2.95 GHz; Output = 2.95 GHz					
At 1 kHz Offset		−47		dBc/Hz	
At 10 kHz Offset		−78		dBc/Hz	
At 100 kHz Offset		−104		dBc/Hz	
At 1 MHz Offset		−122		dBc/Hz	
At 10 MHz Offset		−140		dBc/Hz	
At 40 MHz Offset		−146		dBc/Hz	
VCO = 2.75 GHz; Output = 2.75 GHz					
At 1 kHz Offset		−49		dBc/Hz	
At 10 kHz Offset		−79		dBc/Hz	
At 100 kHz Offset		−105		dBc/Hz	
At 1 MHz Offset		−123		dBc/Hz	
At 10 MHz Offset		−141		dBc/Hz	
At 40 MHz Offset		−146		dBc/Hz	
VCO = 2.55 GHz; Output = 2.55 GHz					
At 1 kHz Offset		−51		dBc/Hz	
At 10 kHz Offset		−80		dBc/Hz	
At 100 kHz Offset		−106		dBc/Hz	
At 1 MHz Offset		−125		dBc/Hz	
At 10 MHz Offset		−142		dBc/Hz	
At 40 MHz Offset		−146		dBc/Hz	

CLOCK OUTPUT ABSOLUTE TIME JITTER (CLOCK GENERATION USING INTERNAL VCO)

Table 8.

Parameter	Min	Typ	Max	Unit	Test Conditions/Comments
LVPECL OUTPUT ABSOLUTE TIME JITTER					Application example based on a typical setup where the reference source is clean, so a wider PLL loop bandwidth is used; reference = 15.36 MHz; R = 1
VCO = 2.95 GHz; LVPECL = 491.52 MHz; PLL LBW = 75 kHz		148		fs rms	Integration BW = 200 kHz to 10 MHz
		342		fs rms	Integration BW = 12 kHz to 20 MHz
VCO = 2.95 GHz; LVPECL = 122.88 MHz; PLL LBW = 75 kHz		212		fs rms	Integration BW = 200 kHz to 10 MHz
		320		fs rms	Integration BW = 12 kHz to 20 MHz
VCO = 2.70 GHz; LVPECL = 122.88 MHz; PLL LBW = 187 kHz		184		fs rms	Integration BW = 200 kHz to 10 MHz
		304		fs rms	Integration BW = 12 kHz to 20 MHz
VCO = 2.70 GHz; LVPECL = 61.44 MHz; PLL LBW = 187 kHz		221		fs rms	Integration BW = 200 kHz to 10 MHz
		345		fs rms	Integration BW = 12 kHz to 20 MHz
VCO = 2.58 GHz; LVPECL = 61.44 MHz; PLL LBW = 75 kHz		210		fs rms	Integration BW = 200 kHz to 10 MHz
		334		fs rms	Integration BW = 12 kHz to 20 MHz

CLOCK OUTPUT ABSOLUTE TIME JITTER (CLOCK CLEANUP USING INTERNAL VCO)

Table 9.

Parameter	Min	Typ	Max	Unit	Test Conditions/Comments
LVPECL OUTPUT ABSOLUTE TIME JITTER					Application example based on a typical setup where the reference source is jittery, so a narrower PLL loop bandwidth is used; reference = 19.44 MHz; R = 1
VCO = 2.80 GHz; LVPECL = 155.52 MHz; PLL LBW = 12.8 kHz		513		fs rms	Integration BW = 12 kHz to 20 MHz
VCO = 2.95 GHz; LVPECL = 77.76 MHz; PLL LBW = 12.8 kHz		544		fs rms	Integration BW = 12 kHz to 20 MHz

CLOCK OUTPUT ABSOLUTE TIME JITTER (CLOCK GENERATION USING EXTERNAL VCXO)

Table 10.

Parameter	Min	Typ	Max	Unit	Test Conditions/Comments
LVPECL OUTPUT ABSOLUTE TIME JITTER					Application example based on a typical setup using an external 245.76 MHz VCXO (Toyocom TCO-2112); reference = 15.36 MHz; R = 1
LVPECL = 245.76 MHz; PLL LBW = 125 Hz		54		fs rms	Integration BW = 200 kHz to 5 MHz
		77		fs rms	Integration BW = 200 kHz to 10 MHz
		109		fs rms	Integration BW = 12 kHz to 20 MHz
LVPECL = 122.88 MHz; PLL LBW = 125 Hz		79		fs rms	Integration BW = 200 kHz to 5 MHz
		114		fs rms	Integration BW = 200 kHz to 10 MHz
		163		fs rms	Integration BW = 12 kHz to 20 MHz
LVPECL = 61.44 MHz; PLL LBW = 125 Hz		124		fs rms	Integration BW = 200 kHz to 5 MHz
		176		fs rms	Integration BW = 200 kHz to 10 MHz
		259		fs rms	Integration BW = 12 kHz to 20 MHz

CLOCK OUTPUT ADDITIVE TIME JITTER (VCO DIVIDER NOT USED)

Table 11.

Parameter	Min	Typ	Max	Unit	Test Conditions/Comments
LVPECL OUTPUT ADDITIVE TIME JITTER					Distribution section only; does not include PLL and VCO; uses rising edge of clock signal
CLK = 622.08 MHz; LVPECL = 622.08 MHz; Divider = 1		40		fs rms	BW = 12 kHz to 20 MHz
CLK = 622.08 MHz; LVPECL = 155.52 MHz; Divider = 4		80		fs rms	BW = 12 kHz to 20 MHz
CLK = 1.6 GHz; LVPECL = 100 MHz; Divider = 16		215		fs rms	Calculated from SNR of ADC method; DCC not used for even divides
CLK = 500 MHz; LVPECL = 100 MHz; Divider = 5		245		fs rms	Calculated from SNR of ADC method; DCC on
LVDS OUTPUT ADDITIVE TIME JITTER					Distribution section only; does not include PLL and VCO; uses rising edge of clock signal
CLK = 1.6 GHz; LVDS = 800 MHz; Divider = 2; VCO Divider Not Used		85		fs rms	BW = 12 kHz to 20 MHz
CLK = 1 GHz; LVDS = 200 MHz; Divider = 5		113		fs rms	BW = 12 kHz to 20 MHz
CLK = 1.6 GHz; LVDS= 100 MHz; Divider = 16		280		fs rms	Calculated from SNR of ADC method; DCC not used for even divides
CMOS OUTPUT ADDITIVE TIME JITTER					Distribution section only; does not include PLL and VCO; uses rising edge of clock signal
CLK = 1.6 GHz; CMOS = 100 MHz; Divider = 16		365		fs rms	Calculated from SNR of ADC method; DCC not used for even divides

CLOCK OUTPUT ADDITIVE TIME JITTER (VCO DIVIDER USED)

Table 12.

Parameter	Min	Typ	Max	Unit	Test Conditions/Comments
LVPECL OUTPUT ADDITIVE TIME JITTER					Distribution section only; does not include PLL and VCO; uses rising edge of clock signal
CLK = 2.4 GHz; VCO DIV = 2; LVPECL = 100 MHz; Divider = 12; Duty-Cycle Correction = Off		210		fs rms	Calculated from SNR of ADC method
LVDS OUTPUT ADDITIVE TIME JITTER					Distribution section only; does not include PLL and VCO; uses rising edge of clock signal
CLK = 2.4 GHz; VCO DIV = 2; LVDS = 100 MHz; Divider = 12; Duty-Cycle Correction = Off		285		fs rms	Calculated from SNR of ADC method
CMOS OUTPUT ADDITIVE TIME JITTER					Distribution section only; does not include PLL and VCO; uses rising edge of clock signal
CLK = 2.4 GHz; VCO DIV = 2; CMOS = 100 MHz; Divider = 12; Duty-Cycle Correction = Off		350		fs rms	Calculated from SNR of ADC method

DELAY BLOCK ADDITIVE TIME JITTER

Table 13.

Parameter	Min	Typ	Max	Unit	Test Conditions/Comments
DELAY BLOCK ADDITIVE TIME JITTER[1]					Incremental additive jitter
100 MHz Output					
Delay (1600 µA, 0x1C) Fine Adj. 000000b		0.54		ps rms	
Delay (1600 µA, 0x1C) Fine Adj. 101111b		0.60		ps rms	
Delay (800 µA, 0x1C) Fine Adj. 000000b		0.65		ps rms	
Delay (800 µA, 0x1C) Fine Adj. 101111b		0.85		ps rms	
Delay (800 µA, 0x4C) Fine Adj. 000000b		0.79		ps rms	
Delay (800 µA, 0x4C) Fine Adj. 101111b		1.2		ps rms	
Delay (400 µA, 0x4C) Fine Adj. 000000b		1.2		ps rms	
Delay (400 µA, 0x4C) Fine Adj. 101111b		2.0		ps rms	
Delay (200 µA, 0x1C) Fine Adj. 000000b		1.3		ps rms	
Delay (200 µA, 0x1C) Fine Adj. 101111b		2.5		ps rms	
Delay (200 µA, 0x4C) Fine Adj. 000000b		1.9		ps rms	
Delay (200 µA, 0x4C) Fine Adj. 101111b		3.8		ps rms	

[1] This value is incremental. That is, it is in addition to the jitter of the LVDS or CMOS output without the delay. To estimate the total jitter, the LVDS or CMOS output jitter should be added to this value using the root sum of the squares (RSS) method.

SERIAL CONTROL PORT

Table 14.

Parameter	Min	Typ	Max	Unit	Test Conditions/Comments
$\overline{CS}$ (INPUT)					$\overline{CS}$ has an internal 30 kΩ pull-up resistor
Input Logic 1 Voltage	2.0			V	
Input Logic 0 Voltage			0.8	V	
Input Logic 1 Current			3	µA	
Input Logic 0 Current		110		µA	
Input Capacitance		2		pF	
SCLK (INPUT)					SCLK has an internal 30 kΩ pull-down resistor
Input Logic 1 Voltage	2.0			V	
Input Logic 0 Voltage			0.8	V	
Input Logic 1 Current		110		µA	
Input Logic 0 Current			1	µA	
Input Capacitance		2		pF	
SDIO (WHEN INPUT)					
Input Logic 1 Voltage	2.0			V	
Input Logic 0 Voltage			0.8	V	
Input Logic 1 Current		10		nA	
Input Logic 0 Current		20		nA	
Input Capacitance		2		pF	
SDIO, SDO (OUTPUTS)					
Output Logic 1 Voltage	2.7			V	
Output Logic 0 Voltage			0.4	V	
TIMING					
Clock Rate (SCLK, $1/t_{SCLK}$)			25	MHz	
Pulse Width High, t_{HIGH}	16			ns	
Pulse Width Low, t_{LOW}	16			ns	
SDIO to SCLK Setup, t_{DS}	2			ns	
SCLK to SDIO Hold, t_{DH}	1.1			ns	
SCLK to Valid SDIO and SDO, t_{DV}			8	ns	
$\overline{CS}$ to SCLK Setup and Hold, t_S, t_H	2			ns	
$\overline{CS}$ Minimum Pulse Width High, t_{PWH}	3			ns	

$\overline{PD}$, $\overline{SYNC}$, AND $\overline{RESET}$ PINS

Table 15.

Parameter	Min	Typ	Max	Unit	Test Conditions/Comments
INPUT CHARACTERISTICS					These pins each have a 30 kΩ internal pull-up resistor
Logic 1 Voltage	2.0			V	
Logic 0 Voltage			0.8	V	
Logic 1 Current			1	µA	
Logic 0 Current		110		µA	
Capacitance		2		pF	
$\overline{RESET}$ TIMING					
Pulse Width Low	50			ns	
$\overline{SYNC}$ TIMING					
Pulse Width Low	1.5			High speed clock cycles	High speed clock is CLK input signal

LD, STATUS, AND REFMON PINS

Table 16.

Parameter	Min	Typ	Max	Unit	Test Conditions/Comments
OUTPUT CHARACTERISTICS					When selected as a digital output (CMOS); there are other modes in which these pins are not CMOS digital outputs; see Table 54, Register 0x017, Register 0x01A, and Register 0x01B
Output Voltage High (V_{OH})	2.7			V	
Output Voltage Low (V_{OL})			0.4	V	
MAXIMUM TOGGLE RATE		100		MHz	Applies when mux is set to any divider or counter output, or PFD up/down pulse; also applies in analog lock detect mode; usually debug mode only; beware that spurs may couple to output when any of these pins are toggling
ANALOG LOCK DETECT					
Capacitance		3		pF	On-chip capacitance; used to calculate RC time constant for analog lock detect readback; use a pull-up resistor
REF1, REF2, AND VCO FREQUENCY STATUS MONITOR					
Normal Range	1.02			MHz	Frequency above which the monitor always indicates the presence of the reference
Extended Range (REF1 and REF2 Only)	8			kHz	Frequency above which the monitor always indicates the presence of the reference
LD PIN COMPARATOR					
Trip Point		1.6		V	
Hysteresis		260		mV	

POWER DISSIPATION

Table 17.

Parameter	Min	Typ	Max	Unit	Test Conditions/Comments
POWER DISSIPATION, CHIP					
Power-On Default		1.0	1.2	W	No clock; no programming; default register values; does not include power dissipated in external resistors
Full Operation; CMOS Outputs at 229 MHz		1.4	2.0	W	PLL on; internal VCO = 2750 MHz; VCO divider = 2; all channel dividers on; four LVPECL outputs at 687.5 MHz; eight CMOS outputs (10 pF load) at 229 MHz; all fine delay on, maximum current; does not include power dissipated in external resistors
Full Operation; LVDS Outputs at 200 MHz		1.4	2.1	W	PLL on; internal VCO = 2800 MHz, VCO divider = 2; all channel dividers on; four LVPECL outputs at 700 MHz; four LVDS outputs at 200 MHz; all fine delay on, maximum current; does not include power dissipated in external resistors
$\overline{PD}$ Power-Down		75	185	mW	$\overline{PD}$ pin pulled low; does not include power dissipated in terminations
$\overline{PD}$ Power-Down, Maximum Sleep		31		mW	$\overline{PD}$ pin pulled low; PLL power-down, Register 0x010[1:0] = 01b; SYNC power-down, Register 0x230[2] = 1b; REF for distribution power-down, Register 0x230[1] = 1b
V_{CP} Supply		4	4.8	mW	PLL operating; typical closed-loop configuration
POWER DELTAS, INDIVIDUAL FUNCTIONS					Power delta when a function is enabled/disabled
VCO Divider		30		mW	VCO divider bypassed
REFIN (Differential)		20		mW	All references off to differential reference enabled
REF1, REF2 (Single-Ended)		4		mW	All references off to REF1 or REF2 enabled; differential reference not enabled
VCO		70		mW	CLK input selected to VCO selected
PLL		75		mW	PLL off to PLL on, normal operation; no reference enabled
Channel Divider		30		mW	Divider bypassed to divide-by-2 to divide-by-32
LVPECL Channel (Divider Plus Output Driver)		160		mW	No LVPECL output on to one LVPECL output on, independent of frequency
LVPECL Driver		90		mW	Second LVPECL output turned on, same channel
LVDS Channel (Divider Plus Output Driver)		120		mW	No LVDS output on to one LVDS output on; see Figure 8 for dependence on output frequency
LVDS Driver		50		mW	Second LVDS output turned on, same channel
CMOS Channel (Divider Plus Output Driver)		100		mW	Static; no CMOS output on to one CMOS output on; see Figure 9 for variation over output frequency
CMOS Driver (Second in Pair)		0		mW	Static; second CMOS output, same pair, turned on
CMOS Driver (First in Second Pair)		30		mW	Static; first output, second pair, turned on
Fine Delay Block		50		mW	Delay block off to delay block enabled; maximum current setting

TIMING DIAGRAMS

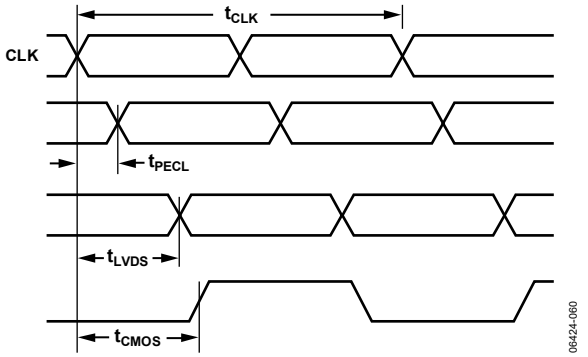

Figure 2. CLK/$\overline{CLK}$ to Clock Output Timing, DIV = 1

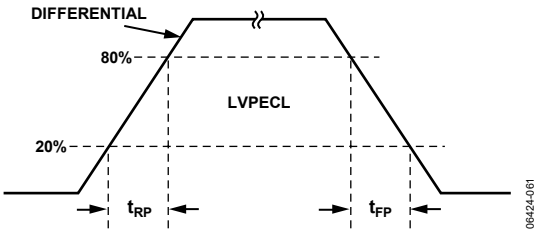

Figure 3. LVPECL Timing, Differential

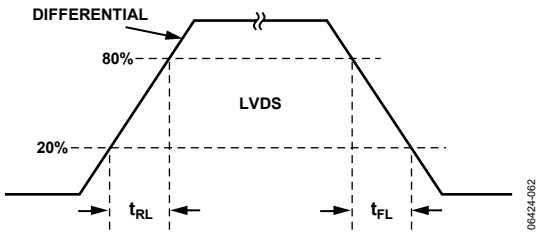

Figure 4. LVDS Timing, Differential

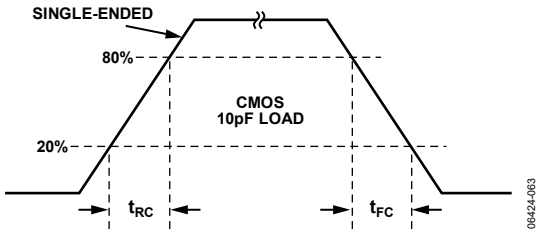

Figure 5. CMOS Timing, Single-Ended, 10 pF Load

ABSOLUTE MAXIMUM RATINGS

Table 18.

Parameter	Rating
VS, VS_LVPECL to GND	−0.3 V to +3.6 V
VCP to GND	−0.3 V to +5.8 V
REFIN, $\overline{\text{REFIN}}$ to GND	−0.3 V to V_S + 0.3 V
REFIN to $\overline{\text{REFIN}}$	−3.3 V to +3.3 V
RSET to GND	−0.3 V to V_S + 0.3 V
CPRSET to GND	−0.3 V to V_S + 0.3 V
CLK, $\overline{\text{CLK}}$ to GND	−0.3 V to V_S + 0.3 V
CLK to $\overline{\text{CLK}}$	−1.2 V to +1.2 V
SCLK, SDIO, SDO, $\overline{\text{CS}}$ to GND	−0.3 V to V_S + 0.3 V
OUT0, $\overline{\text{OUT0}}$, OUT1, $\overline{\text{OUT1}}$, OUT2, $\overline{\text{OUT2}}$, OUT3, $\overline{\text{OUT3}}$,OUT4, $\overline{\text{OUT4}}$, OUT5, $\overline{\text{OUT5}}$, OUT6, $\overline{\text{OUT6}}$, OUT7, $\overline{\text{OUT7}}$ to GND	−0.3 V to V_S + 0.3 V
$\overline{\text{SYNC}}$ to GND	−0.3 V to V_S + 0.3 V
REFMON, STATUS, LD to GND	−0.3 V to V_S + 0.3 V
Junction Temperature[1]	150°C
Storage Temperature Range	−65°C to +150°C
Lead Temperature (10 sec)	300°C

[1] See Table 19 for θ_{JA}.

Stresses above those listed under Absolute Maximum Ratings may cause permanent damage to the device. This is a stress rating only; functional operation of the device at these or any other conditions above those indicated in the operational section of this specification is not implied. Exposure to absolute maximum rating conditions for extended periods may affect device reliability.

THERMAL RESISTANCE

Table 19.

Package Type[1]	θ_{JA}	Unit
48-Lead LFCSP	24.7	°C/W

[1] Thermal impedance measurements were taken on a 4-layer board in still air in accordance with EIA/JESD51-2.

ESD CAUTION



ESD (electrostatic discharge) sensitive device. Charged devices and circuit boards can discharge without detection. Although this product features patented or proprietary protection circuitry, damage may occur on devices subjected to high energy ESD. Therefore, proper ESD precautions should be taken to avoid performance degradation or loss of functionality.

PIN CONFIGURATION AND FUNCTION DESCRIPTIONS

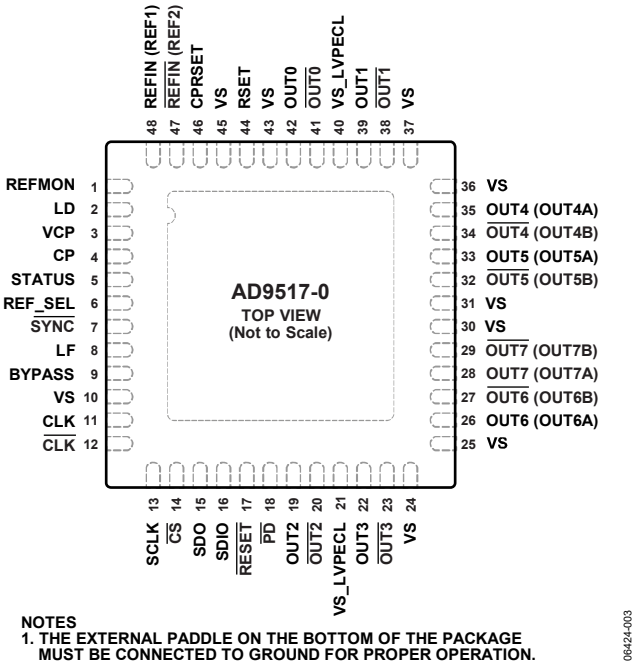

Figure 6. Pin Configuration

Table 20. Pin Function Descriptions

Pin No.	Input/ Output	Pin Type	Mnemonic	Description
1	O	3.3 V CMOS	REFMON	Reference Monitor (Output). This pin has multiple selectable outputs; see Table 54, Register 0x01B.
2	O	3.3 V CMOS	LD	Lock Detect (Output). This pin has multiple selectable outputs; see Table 54, Register 0x01A.
3	I	Power	VCP	Power Supply for Charge Pump (CP); $V_S \le V_{CP} \le 5.0$ V. This pin is usually 3.3 V for most applications; but if a 5 V external VCXO is used, this pin should be 5 V.
4	O	3.3 V CMOS	CP	Charge Pump (Output). Connects to external loop filter.
5	O	3.3 V CMOS	STATUS	Status (Output). This pin has multiple selectable outputs; see Table 54, Register 0x017.
6	I	3.3 V CMOS	REF_SEL	Reference Select. Selects REF1 (low) or REF2 (high). This pin has an internal 30 kΩ pull-down resistor.
7	I	3.3 V CMOS	$\overline{\text{SYNC}}$	Manual Synchronizations and Manual Holdover. This pin initiates a manual synchronization and is also used for manual holdover. Active low. This pin has an internal 30 kΩ pull-up resistor.
8	I	Loop filter	LF	Loop Filter (Input). Connects to VCO control voltage node internally. This pin has 31 pF of internal capacitance to ground, which may influence the loop filter design for large loop bandwidths.
9	O	Loop filter	BYPASS	This pin is for bypassing the LDO to ground with a capacitor.
10, 24, 25, 30, 31, 36, 37, 43, 45	I	Power	VS	3.3 V Power Pins.
11	I	Differential clock input	CLK	Along with $\overline{\text{CLK}}$, this is the self-biased differential input for the clock distribution section. This pin can be left floating if internal VCO is used.
12	I	Differential clock input	$\overline{\text{CLK}}$	Along with CLK, this is the self-biased differential input for the clock distribution section. This pin can be left floating if internal VCO is used.
13	I	3.3 V CMOS	SCLK	Serial Control Port Data Clock Signal.
14	I	3.3 V CMOS	$\overline{\text{CS}}$	Serial Control Port Chip Select; Active Low. This pin has an internal 30 kΩ pull-up resistor.

Pin No.	Input/ Output	Pin Type	Mnemonic	Description
15	O	3.3 V CMOS	SDO	Serial Control Port. Unidirectional serial data output.
16	I/O	3.3 V CMOS	SDIO	Serial Control Port. Bidirectional serial data input/output and unidirectional serial data input.
17	I	3.3 V CMOS	$\overline{\text{RESET}}$	Chip Reset, Active Low. This pin has an internal 30 kΩ pull-up resistor.
18	I	3.3 V CMOS	$\overline{\text{PD}}$	Chip Power Down, Active Low. This pin has an internal 30 kΩ pull-up resistor.
21, 40	I	Power	VS_LVPECL	Extended Voltage 2.5 V to 3.3 V LVPECL Power Pins.
42	O	LVPECL	OUT0	LVPECL Output; One Side of a Differential LVPECL Output.
41	O	LVPECL	$\overline{\text{OUT0}}$	LVPECL Output; One Side of a Differential LVPECL Output.
39	O	LVPECL	OUT1	LVPECL Output; One Side of a Differential LVPECL Output.
38	O	LVPECL	$\overline{\text{OUT1}}$	LVPECL Output; One Side of a Differential LVPECL Output.
19	O	LVPECL	OUT2	LVPECL Output; One Side of a Differential LVPECL Output.
20	O	LVPECL	$\overline{\text{OUT2}}$	LVPECL Output; One Side of a Differential LVPECL Output.
22	O	LVPECL	OUT3	LVPECL Output; One Side of a Differential LVPECL Output.
23	O	LVPECL	$\overline{\text{OUT3}}$	LVPECL Output; One Side of a Differential LVPECL Output.
35	O	LVDS or CMOS	OUT4 (OUT4A)	LVDS/CMOS Output; One Side of a Differential LVDS Output or a Single-Ended CMOS Output.
34	O	LVDS or CMOS	$\overline{\text{OUT4}}$ (OUT4B)	LVDS/CMOS Output; One Side of a Differential LVDS Output or a Single-Ended CMOS Output.
33	O	LVDS or CMOS	OUT5 (OUT5A)	LVDS/CMOS Output; One Side of a Differential LVDS Output or a Single-Ended CMOS Output.
32	O	LVDS or CMOS	$\overline{\text{OUT5}}$ (OUT5B)	LVDS/CMOS Output; One Side of a Differential LVDS Output or a Single-Ended CMOS Output.
26	O	LVDS or CMOS	OUT6 (OUT6A)	LVDS/CMOS Output; One Side of a Differential LVDS Output or a Single-Ended CMOS Output.
27	O	LVDS or CMOS	$\overline{\text{OUT6}}$ (OUT6B)	LVDS/CMOS Output; One Side of a Differential LVDS Output or a Single-Ended CMOS Output.
28	O	LVDS or CMOS	OUT7 (OUT7A)	LVDS/CMOS Output; One Side of a Differential LVDS Output or a Single-Ended CMOS Output.
29	O	LVDS or CMOS	$\overline{\text{OUT7}}$ (OUT7B)	LVDS/CMOS Output; One Side of a Differential LVDS Output or a Single-Ended CMOS Output.
44	O	Current set resistor	RSET	Resistor connected here sets internal bias currents. Nominal value = 4.12 kΩ.
46	O	Current set resistor	CPRSET	Resistor connected here sets CP current range. Nominal value = 5.1 kΩ.
47	I	Reference input	$\overline{\text{REFIN}}$ (REF2)	Along with REFIN, this is the self-biased differential input for the PLL reference. Alternatively, this pin is a single-ended input for REF2.
48	I	Reference input	REFIN (REF1)	Along with $\overline{\text{REFIN}}$, this is the self-biased differential input for the PLL reference. Alternatively, this pin is a single-ended input for REF1.
EPAD		GND	GND	Ground. The external paddle on the bottom of the package must be connected to ground for proper operation.

TYPICAL PERFORMANCE CHARACTERISTICS

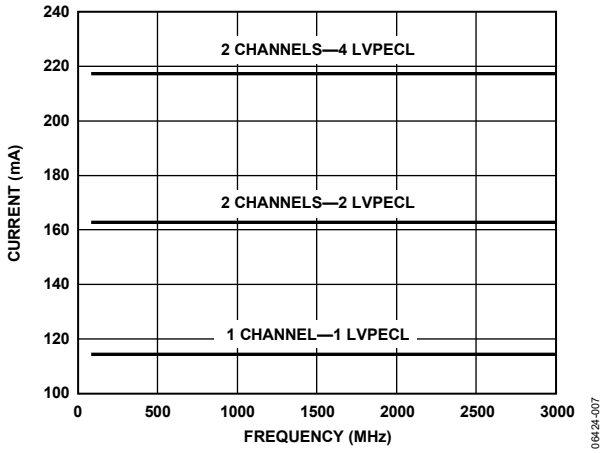

Figure 7. Current vs. Frequency, Direct to Output, LVPECL Outputs

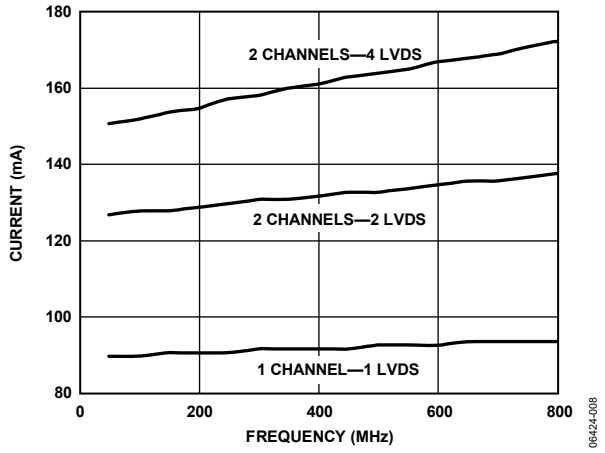

Figure 8. Current vs. Frequency—LVDS Outputs (Includes Clock Distribution Current Draw)

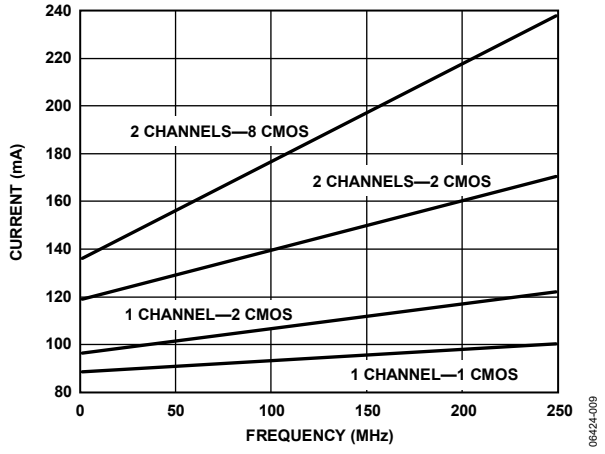

Figure 9. Current vs. Frequency—CMOS Outputs

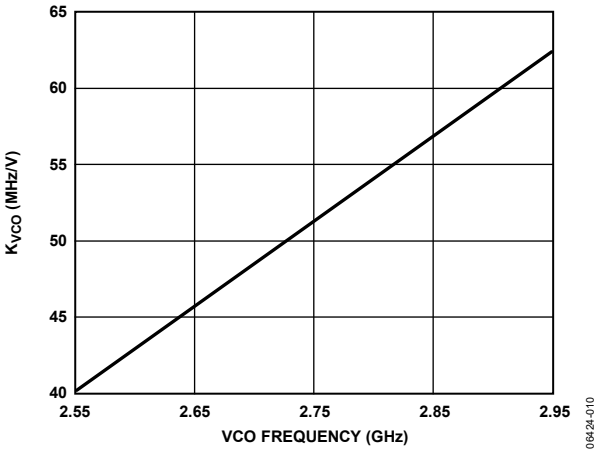

Figure 10. VCO K_{VCO} vs. Frequency

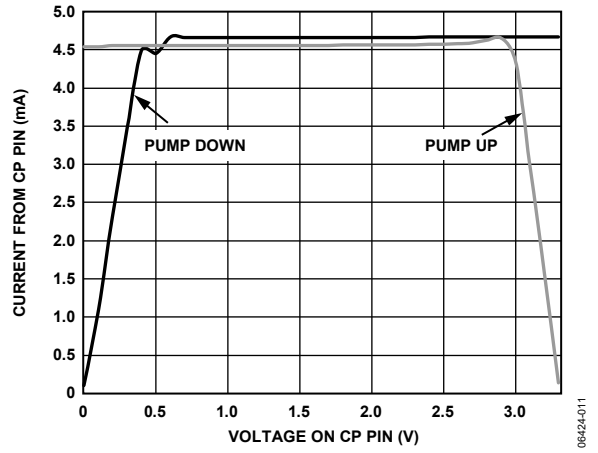

Figure 11. Charge Pump Characteristics at V_{CP} = 3.3 V

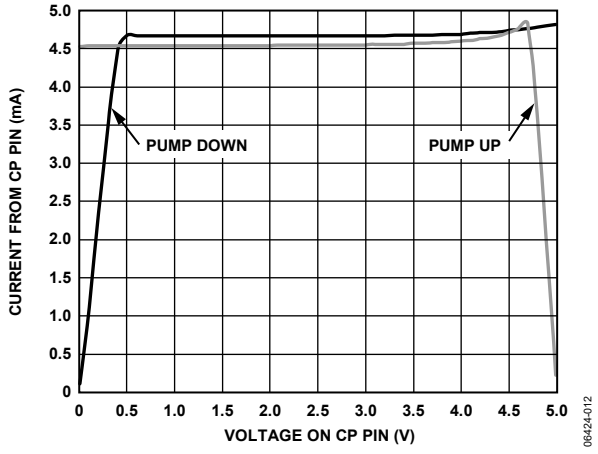

Figure 12. Charge Pump Characteristics at V_{CP} = 5.0 V

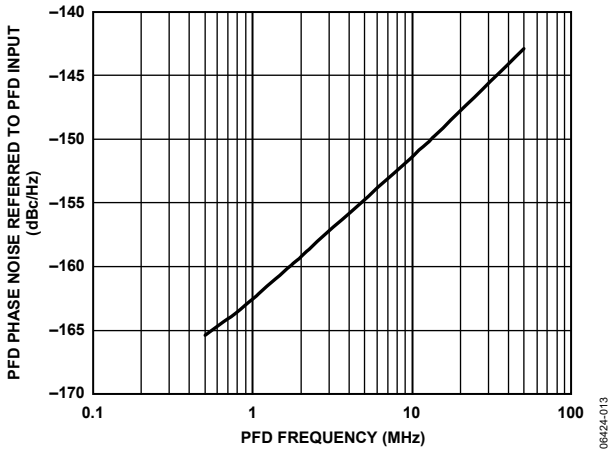

Figure 13. PFD Phase Noise Referred to PFD Input vs. PFD Frequency

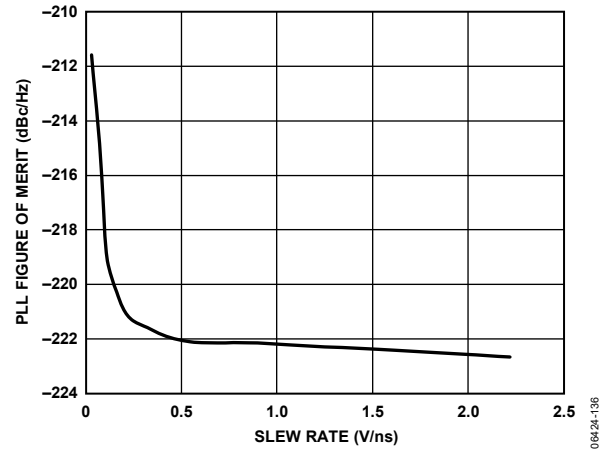

Figure 14. PLL Figure of Merit (FOM) vs. Slew Rate at REFIN/$\overline{\text{REFIN}}$

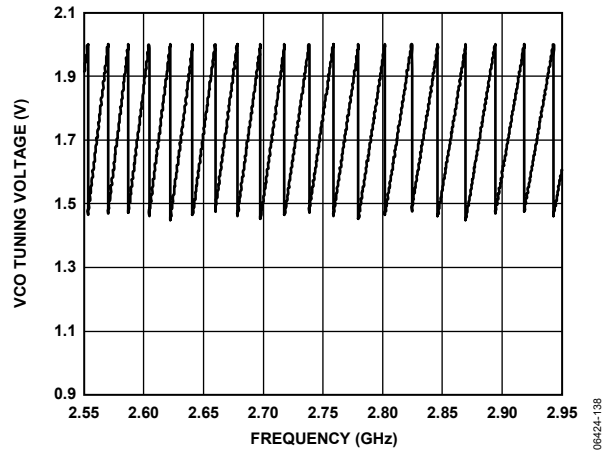

Figure 15. VCO Tuning Voltage vs. Frequency
(Note that VCO calibration centers the dc tuning voltage for the PLL setup that is active during calibration.)

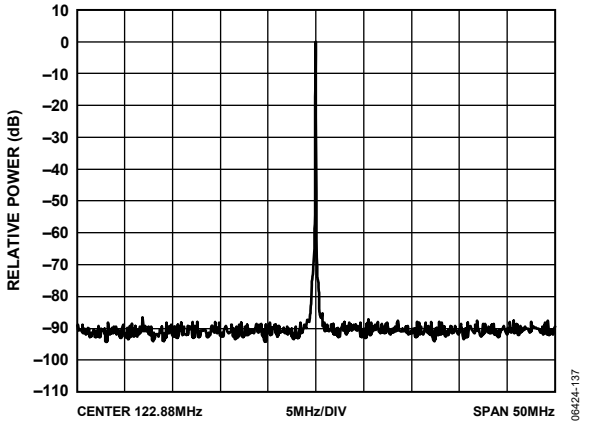

Figure 16. PFD/CP Spurs; 122.88 MHz; PFD = 15.36 MHz; LBW = 190 kHz; I_{CP} = 4.2 mA; f_{VCO} = 2.7 GHz

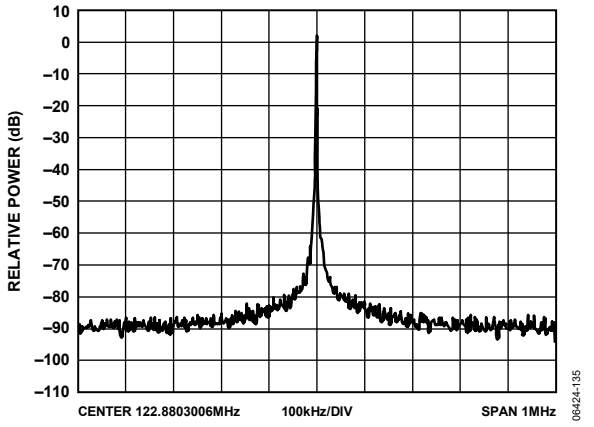

Figure 17. Output Spectrum, LVPECL; 122.88 MHz; PFD = 15.36 MHz; LBW = 190 kHz; I_{CP} = 4.2 mA; f_{VCO} = 2.7 GHz

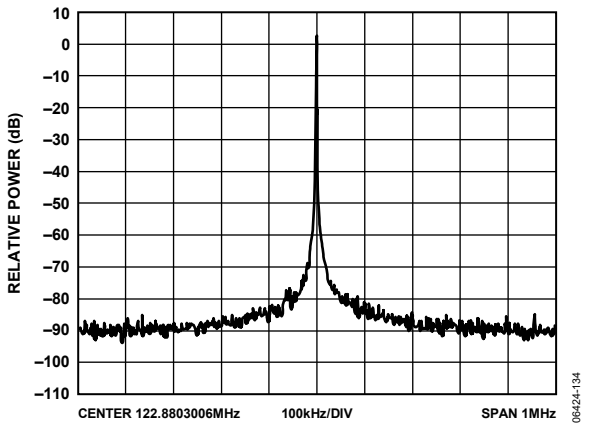

Figure 18. Output Spectrum, LVDS; 122.88 MHz; PFD = 15.36 MHz; LBW = 190 kHz; I_{CP} = 4.2 mA; f_{VCO} = 2.7 GHz

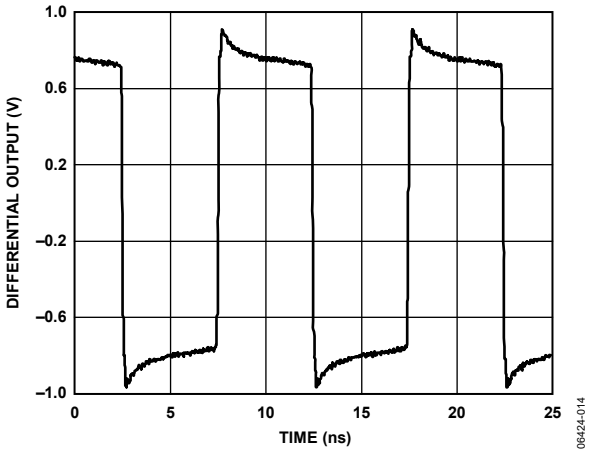

Figure 19. LVPECL Output (Differential) at 100 MHz

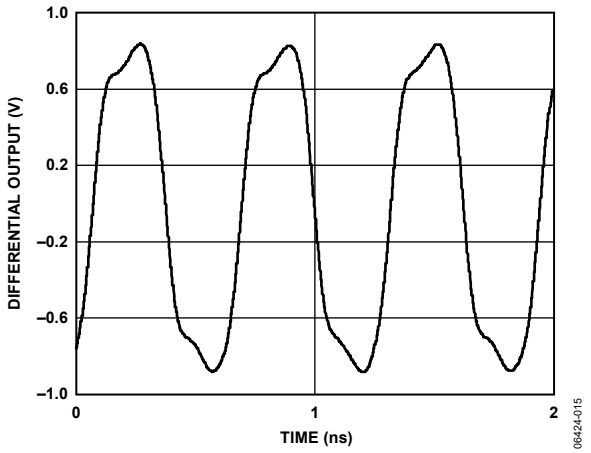

Figure 20. LVPECL Output (Differential) at 1600 MHz

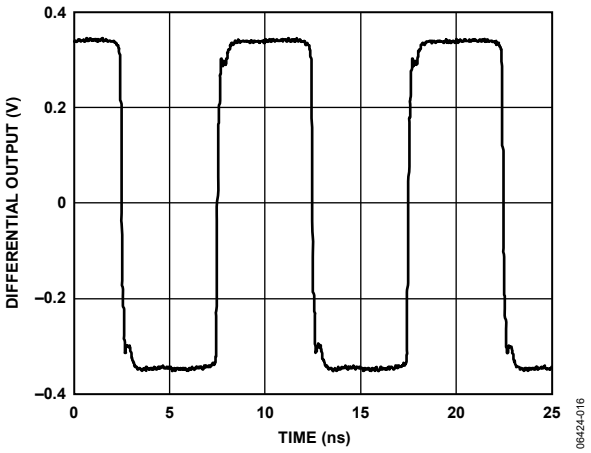

Figure 21. LVDS Output (Differential) at 100 MHz

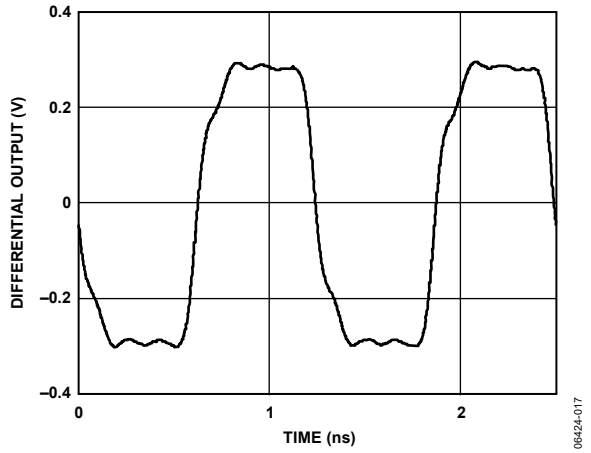

Figure 22. LVDS Output (Differential) at 800 MHz

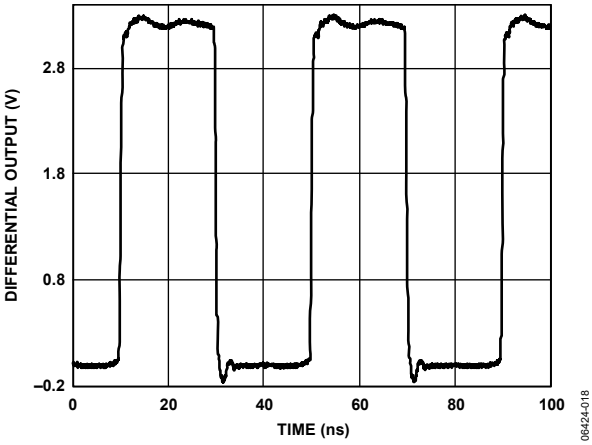

Figure 23. CMOS Output at 25 MHz

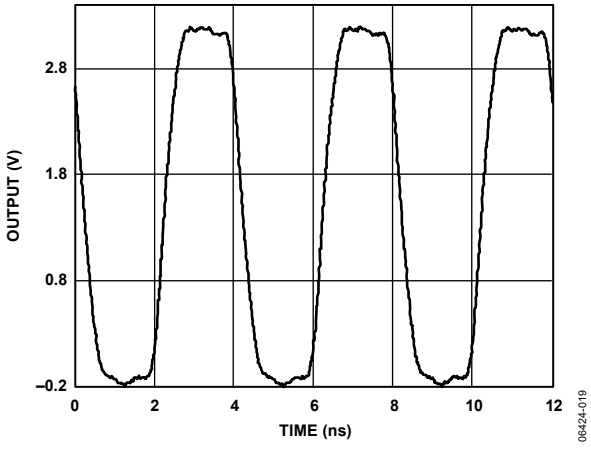

Figure 24. CMOS Output at 250 MHz

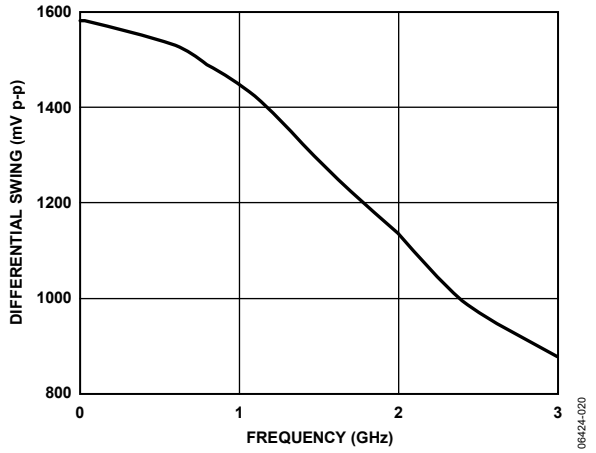

Figure 25. LVPECL Differential Swing vs. Frequency, Using a Differential Probe Across the Output Pair

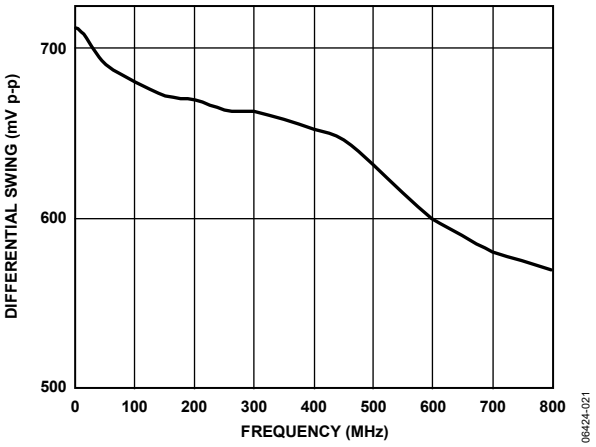

Figure 26. LVDS Differential Swing vs. Frequency, Using a Differential Probe Across the Output Pair

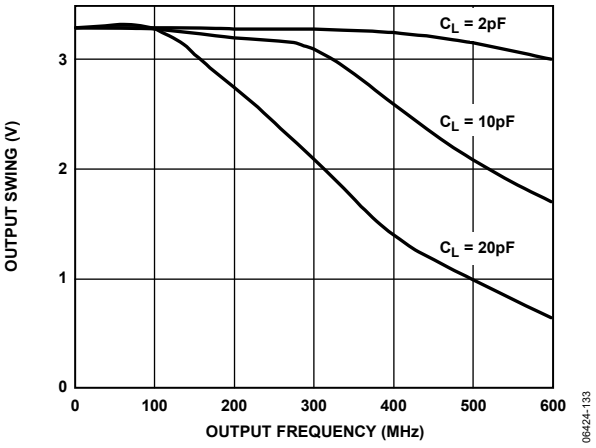

Figure 27. CMOS Output Swing vs. Frequency and Capacitive Load

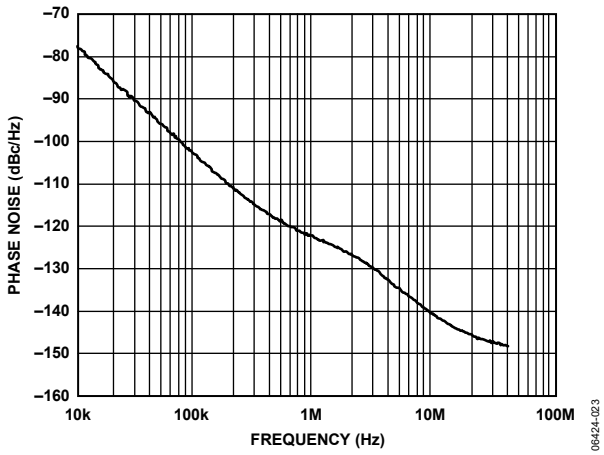

Figure 28. Internal VCO Phase Noise (Absolute) Direct to LVPECL at 2950 MHz

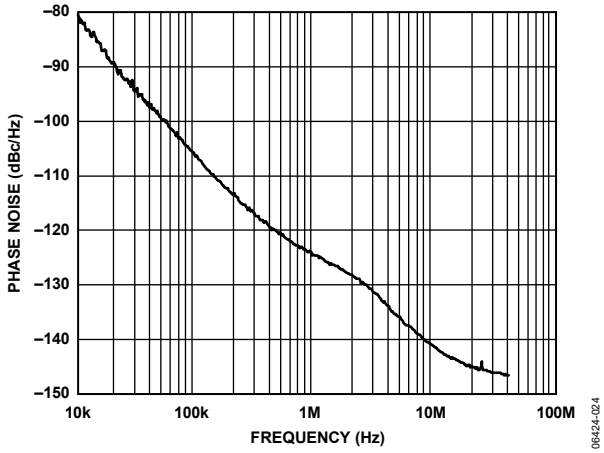

Figure 29. Internal VCO Phase Noise (Absolute) Direct to LVPECL at 2750 MHz

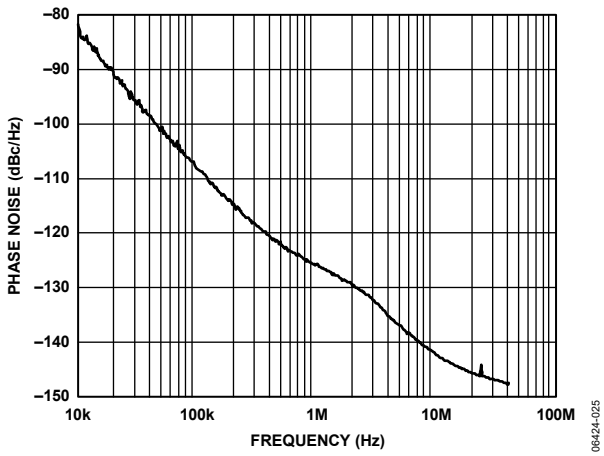

Figure 30. Internal VCO Phase Noise (Absolute) Direct to LVPECL at 2550 MHz

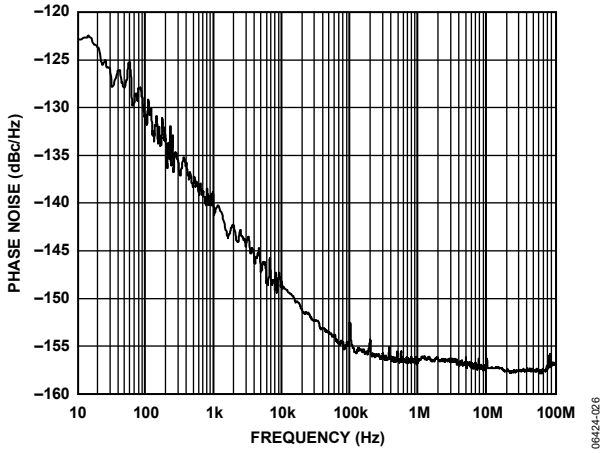

Figure 31. Phase Noise (Additive) LVPECL at 245.76 MHz, Divide-by-1

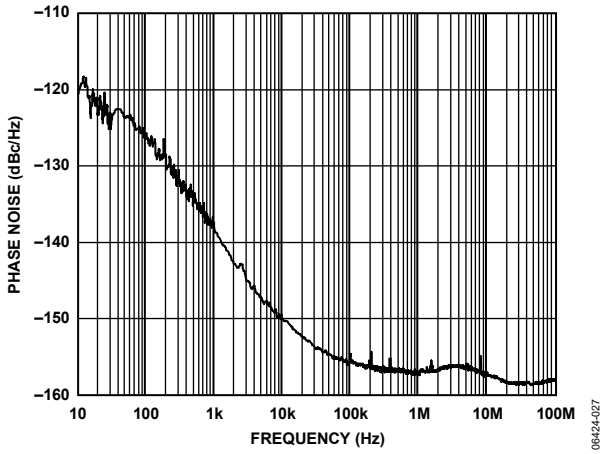

Figure 32. Phase Noise (Additive) LVPECL at 200 MHz, Divide-by-5

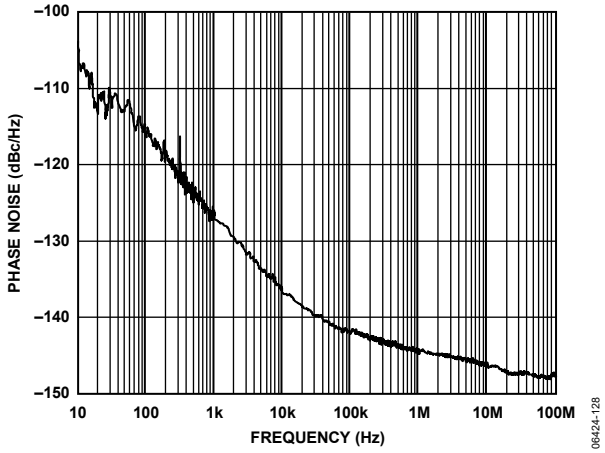

Figure 33. Phase Noise (Additive) LVPECL at 1600 MHz, Divide-by-1

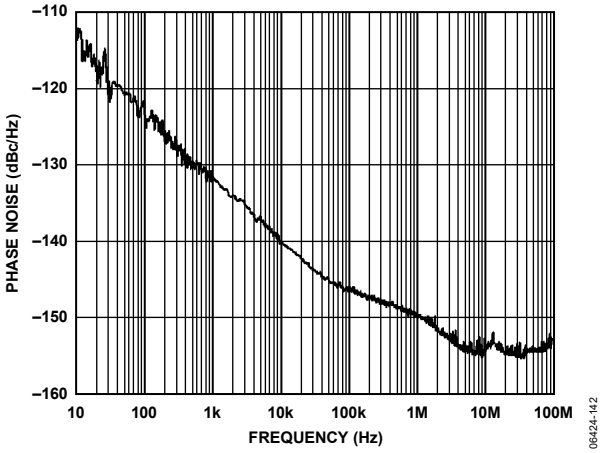

Figure 34. Phase Noise (Additive) LVDS at 200 MHz, Divide-by-1

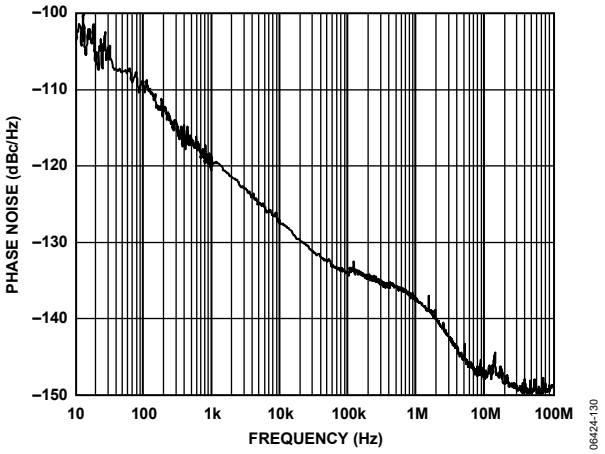

Figure 35. Phase Noise (Additive) LVDS at 800 MHz, Divide-by-2

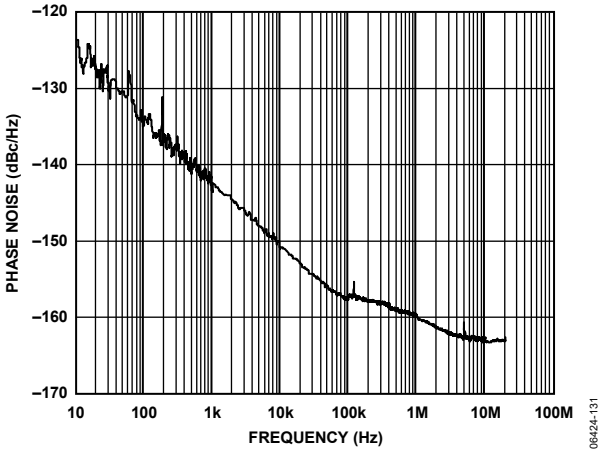

Figure 36. Phase Noise (Additive) CMOS at 50 MHz, Divide-by-20

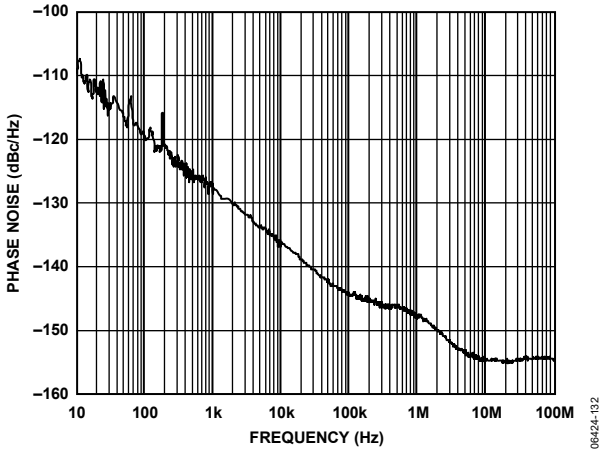

Figure 37. Phase Noise (Additive) CMOS at 250 MHz, Divide-by-4

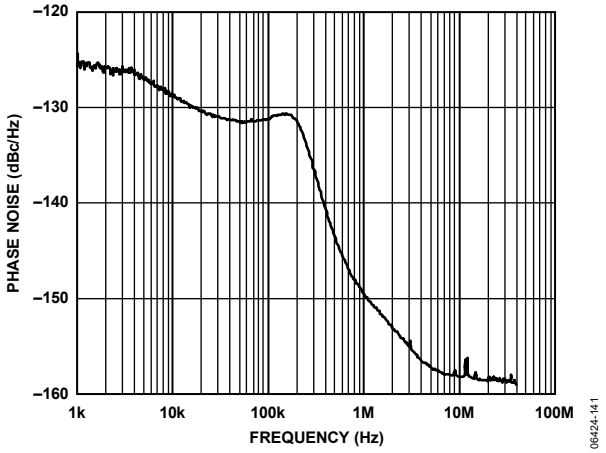

Figure 38. Phase Noise (Absolute) Clock Generation; Internal VCO at 2.7 GHz; PFD = 15.36 MHz; LBW = 110 kHz; LVPECL Output = 122.88 MHz

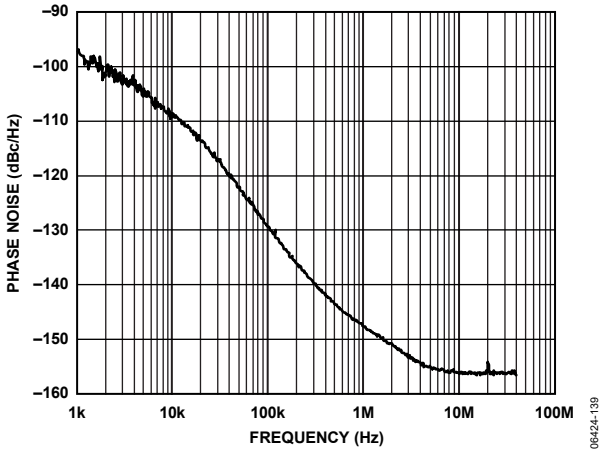

Figure 39. Phase Noise (Absolute) Clock Cleanup; Internal VCO at 2.8 GHz; PFD = 19.44 MHz; LBW = 12.8 kHz; LVPECL Output = 155.52 MHz

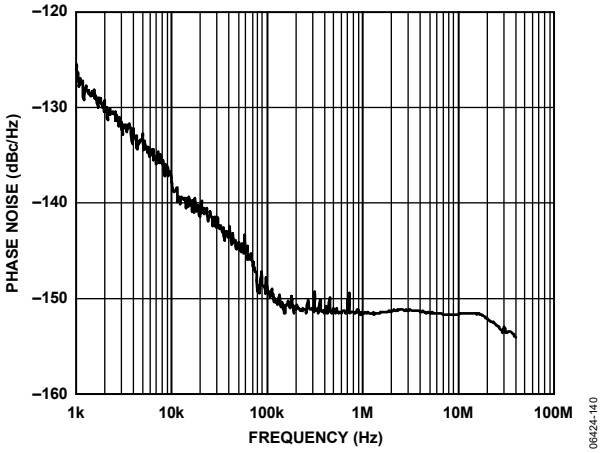

Figure 40. Phase Noise (Absolute), External VCXO (Toyocom TCO-2112) at 245.76 MHz; PFD = 15.36 MHz; LBW = 250 Hz; LVPECL Output = 245.76 MHz

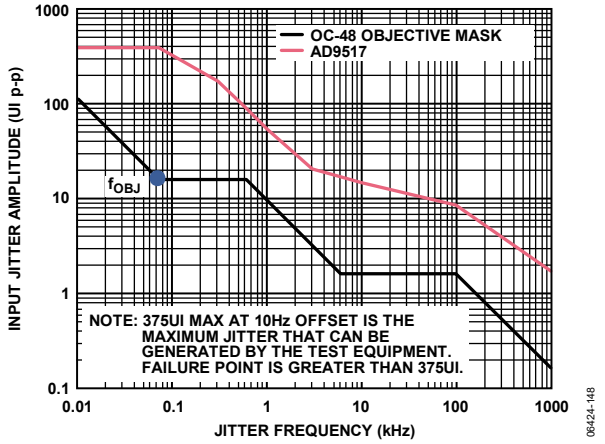

Figure 41. GR-253 Jitter Tolerance Plot

TERMINOLOGY

Phase Jitter and Phase Noise

An ideal sine wave can be thought of as having a continuous and even progression of phase with time from 0° to 360° for each cycle. Actual signals, however, display a certain amount of variation from ideal phase progression over time. This phenomenon is called phase jitter. Although many causes can contribute to phase jitter, one major cause is random noise, which is characterized statistically as being Gaussian (normal) in distribution.

This phase jitter leads to a spreading out of the energy of the sine wave in the frequency domain, producing a continuous power spectrum. This power spectrum is usually reported as a series of values whose units are dBc/Hz at a given offset in frequency from the sine wave (carrier). The value is a ratio (expressed in dB) of the power contained within a 1 Hz bandwidth with respect to the power at the carrier frequency. For each measurement, the offset from the carrier frequency is also given.

It is meaningful to integrate the total power contained within some interval of offset frequencies (for example, 10 kHz to 10 MHz). This is called the integrated phase noise over that frequency offset interval and can be readily related to the time jitter due to the phase noise within that offset frequency interval.

Phase noise has a detrimental effect on the performance of ADCs, DACs, and RF mixers. It lowers the achievable dynamic range of the converters and mixers, although they are affected in somewhat different ways.

Time Jitter

Phase noise is a frequency domain phenomenon. In the time domain, the same effect is exhibited as time jitter. When observing a sine wave, the time of successive zero crossings varies. In a square wave, the time jitter is a displacement of the edges from their ideal (regular) times of occurrence. In both cases, the variations in timing from the ideal are the time jitter. Because these variations are random in nature, the time jitter is specified in units of seconds root mean square (rms) or 1 sigma of the Gaussian distribution.

Time jitter that occurs on a sampling clock for a DAC or an ADC decreases the signal-to-noise ratio (SNR) and dynamic range of the converter. A sampling clock with the lowest possible jitter provides the highest performance from a given converter.

Additive Phase Noise

Additive phase noise is the amount of phase noise that can be attributed to the device or subsystem being measured. The phase noise of any external oscillators or clock sources is subtracted. This makes it possible to predict the degree to which the device impacts the total system phase noise when used in conjunction with the various oscillators and clock sources, each of which contributes its own phase noise to the total. In many cases, the phase noise of one element dominates the system phase noise. When there are multiple contributors to phase noise, the total is the square root of the sum of squares of the individual contributors.

Additive Time Jitter

Additive time jitter is the amount of time jitter that can be attributed to the device or subsystem being measured. The time jitter of any external oscillators or clock sources is subtracted. This makes it possible to predict the degree to which the device impacts the total system time jitter when used in conjunction with the various oscillators and clock sources, each of which contributes its own time jitter to the total. In many cases, the time jitter of the external oscillators and clock sources dominates the system time jitter.

DETAILED BLOCK DIAGRAM

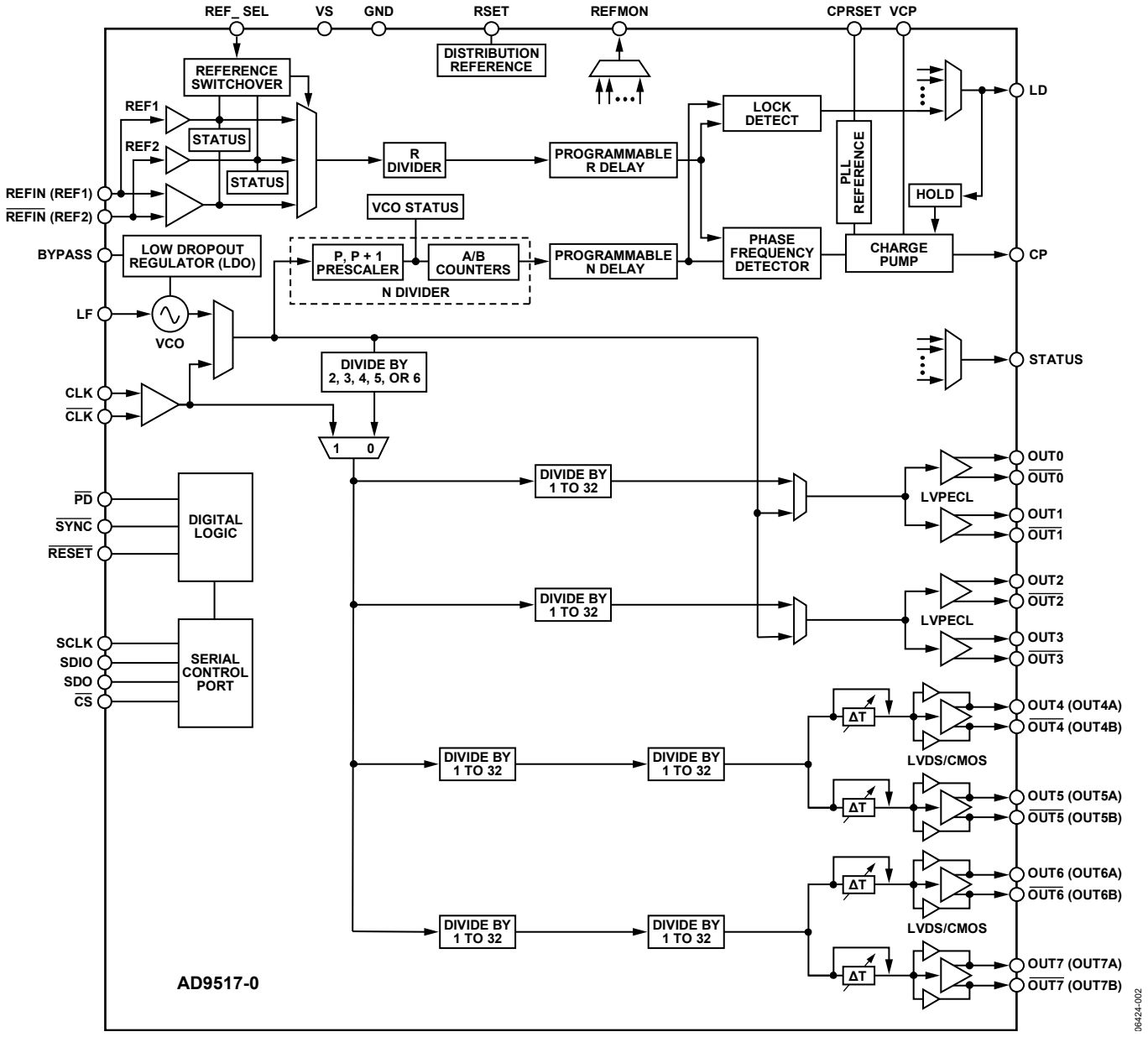

Figure 42. Detailed Block Diagram

THEORY OF OPERATION

OPERATIONAL CONFIGURATIONS

The AD9517 can be configured in several ways. These configurations must be set up by loading the control registers (see Table 52 and Table 53 through Table 62). Each section or function must be individually programmed by setting the appropriate bits in the corresponding control register or registers.

High Frequency Clock Distribution—CLK or External VCO > 1600 MHz

The AD9517 power-up default configuration has the PLL powered off and the routing of the input set so that the CLK/$\overline{\text{CLK}}$ input is connected to the distribution section through the VCO divider (divide-by-2/ divide-by-3/divide-by-4/ divide-by-5/divide-by-6). This is a distribution-only mode that allows for an external input up to 2400 MHz (see Table 3). The maximum frequency that can be applied to the channel dividers is 1600 MHz; therefore, higher input frequencies must be divided down before reaching the channel dividers. This input routing can also be used for lower input frequencies, but the minimum divide is 2 before the channel dividers.

When the PLL is enabled, this routing also allows the use of the PLL with an external VCO or VCXO with a frequency of less than 2400 MHz. In this configuration, the internal VCO is not used and is powered off. The external VCO/VCXO feeds directly into the prescaler.

The register settings shown in Table 21 are the default values of these registers at power-up or after a reset operation. If the contents of the registers are altered by prior programming after power-up or reset, these registers can also be set intentionally to these values.

After the appropriate register values are programmed, Register 0x232 must be set to 0x01 for the values to take effect.

Table 21. Default Settings of Some PLL Registers

Register	Function
0x010[1:0] = 01b	PLL asynchronous power-down (PLL off).
0x1E0[2:0] = 010b	Set VCO divider = 4.
0x1E1[0] = 0b	Use the VCO divider.
0x1E1[1] = 0b	CLK selected as the source.

When using the internal PLL with an external VCO, the PLL must be turned on.

Table 22. Settings When Using an External VCO

Register	Function
0x010[1:0] = 00b	PLL normal operation (PLL on).
0x010 to 0x01D	PLL settings. Select and enable a reference input; set R, N (P, A, B), PFD polarity, and I_{CP}, according to the intended loop configuration.
0x1E1[1] = 0b	CLK selected as the source.

An external VCO requires an external loop filter that must be connected between CP and the tuning pin of the VCO. This loop filter determines the loop bandwidth and stability of the PLL. Make sure to select the proper PFD polarity for the VCO being used.

Table 23. Setting the PFD Polarity

Register	Function
0x010[7] = 0b	PFD polarity positive (higher control voltage produces higher frequency).
0x010[7] = 1b	PFD polarity negative (higher control voltage produces lower frequency).

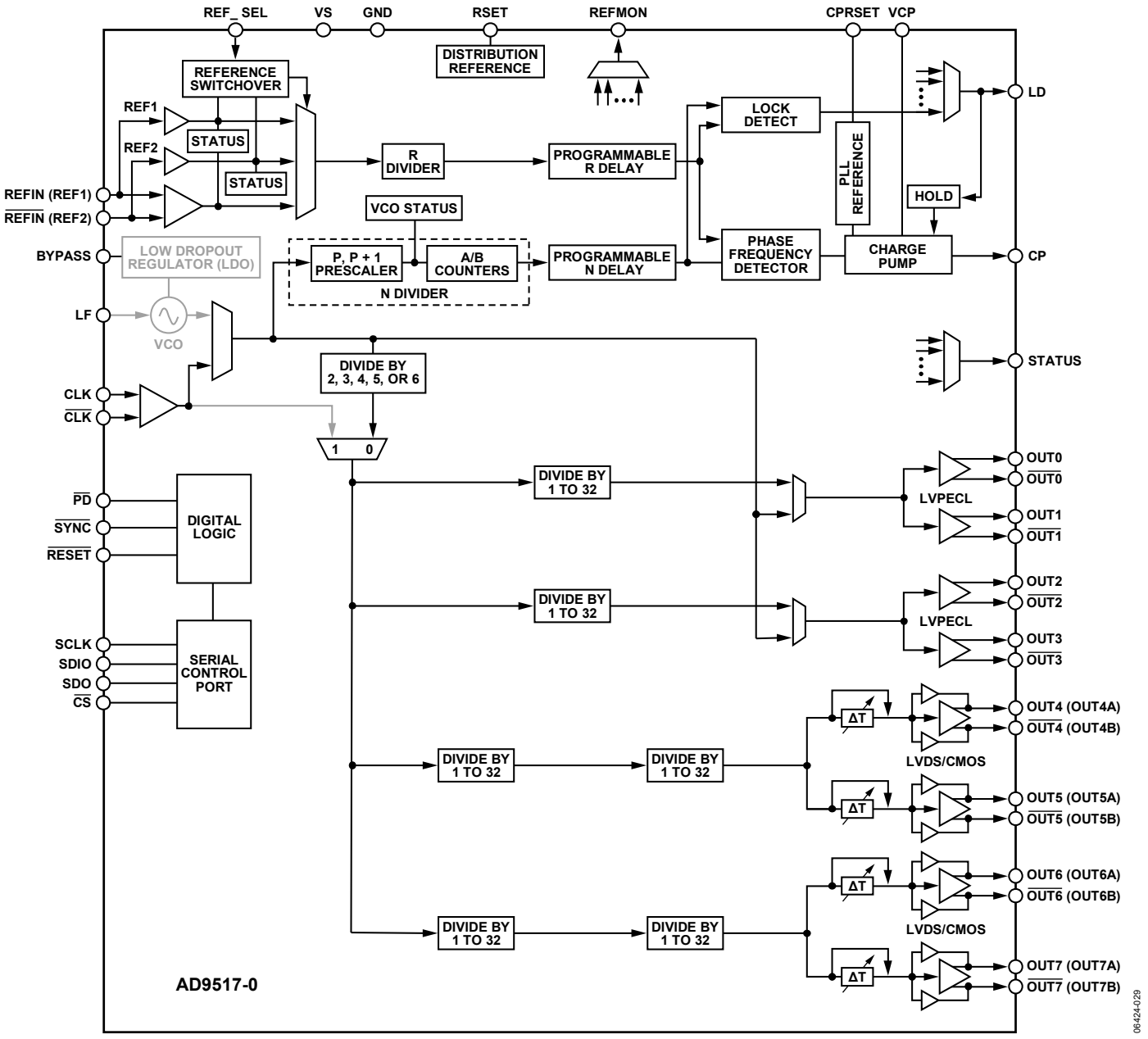

Figure 43. High Frequency Clock Distribution or External VCO > 1600 MHz

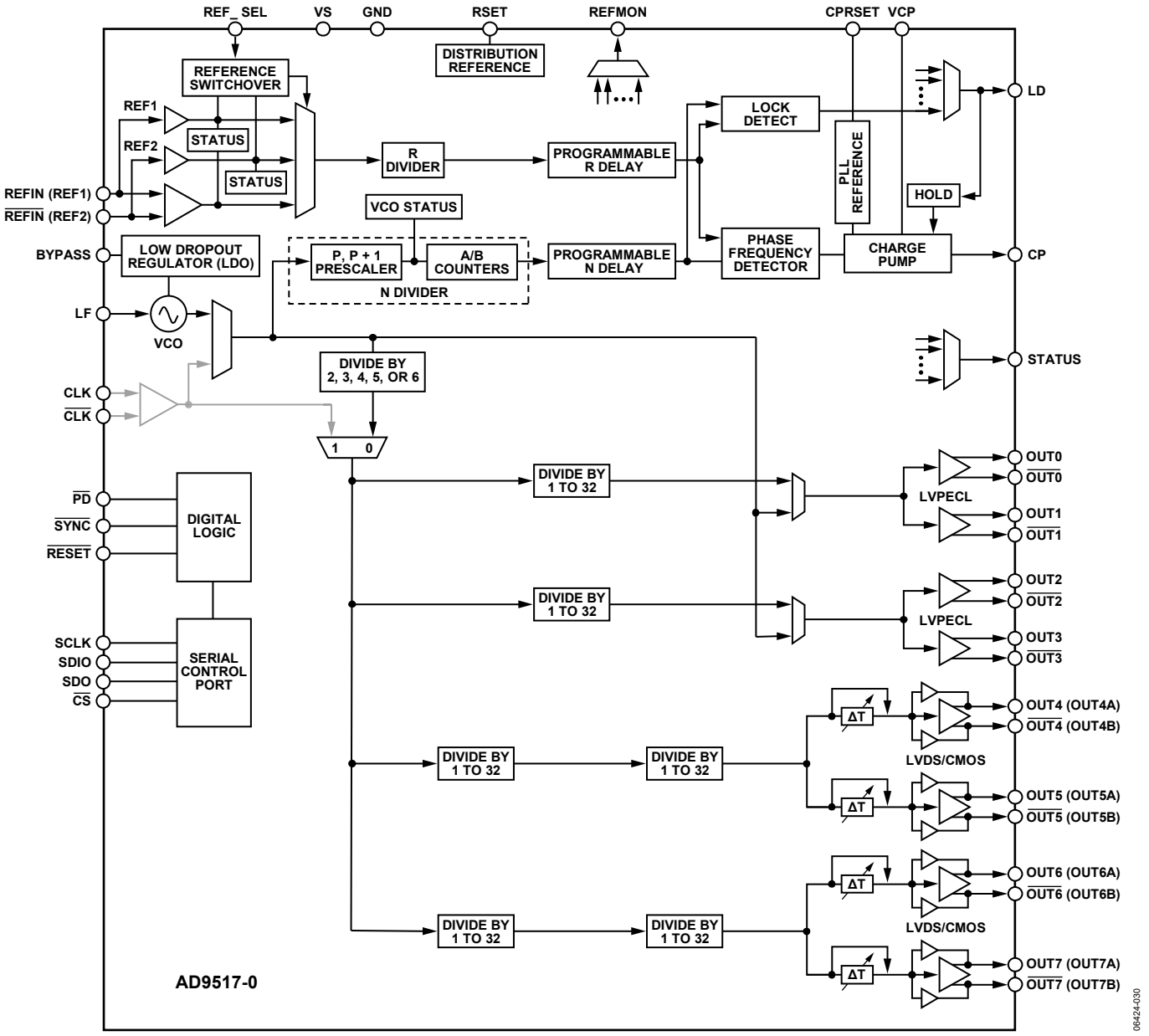

Figure 44. Internal VCO and Clock Distribution

Internal VCO and Clock Distribution

When using the internal VCO and PLL, the VCO divider must be employed to ensure that the frequency presented to the channel dividers does not exceed their specified maximum frequency of 1600 MHz (see Table 3). The internal PLL uses an external loop filter to set the loop bandwidth. The external loop filter is also crucial to the loop stability.

When using the internal VCO, it is necessary to calibrate the VCO (Register 0x018[0]) to ensure optimal performance.

For internal VCO and clock distribution applications, use the register settings that are shown in Table 24.

Table 24. Settings When Using Internal VCO

Register	Function
0x010[1:0] = 00b	PLL normal operation (PLL on).
0x010 to 0x01D	PLL settings. Select and enable a reference input; set R, N (P, A, B), PFD polarity, and I_{CP} according to the intended loop configuration.
0x018[0] = 0b, 0x232[0] = 1b	Reset VCO calibration. This is not required the first time after power-up, but it must be performed subsequently.
0x1E0[2:0]	Set VCO divider to divide-by-2, divide-by-3, divide-by-4, divide-by-5, and divide-by-6.
0x1E1[0] = 0b	Use the VCO divider as the source for the distribution section.
0x1E1[1] = 1b	Select VCO as the source.
0x018[0] = 1b, 0x232[0] = 1b	Initiate VCO calibration.

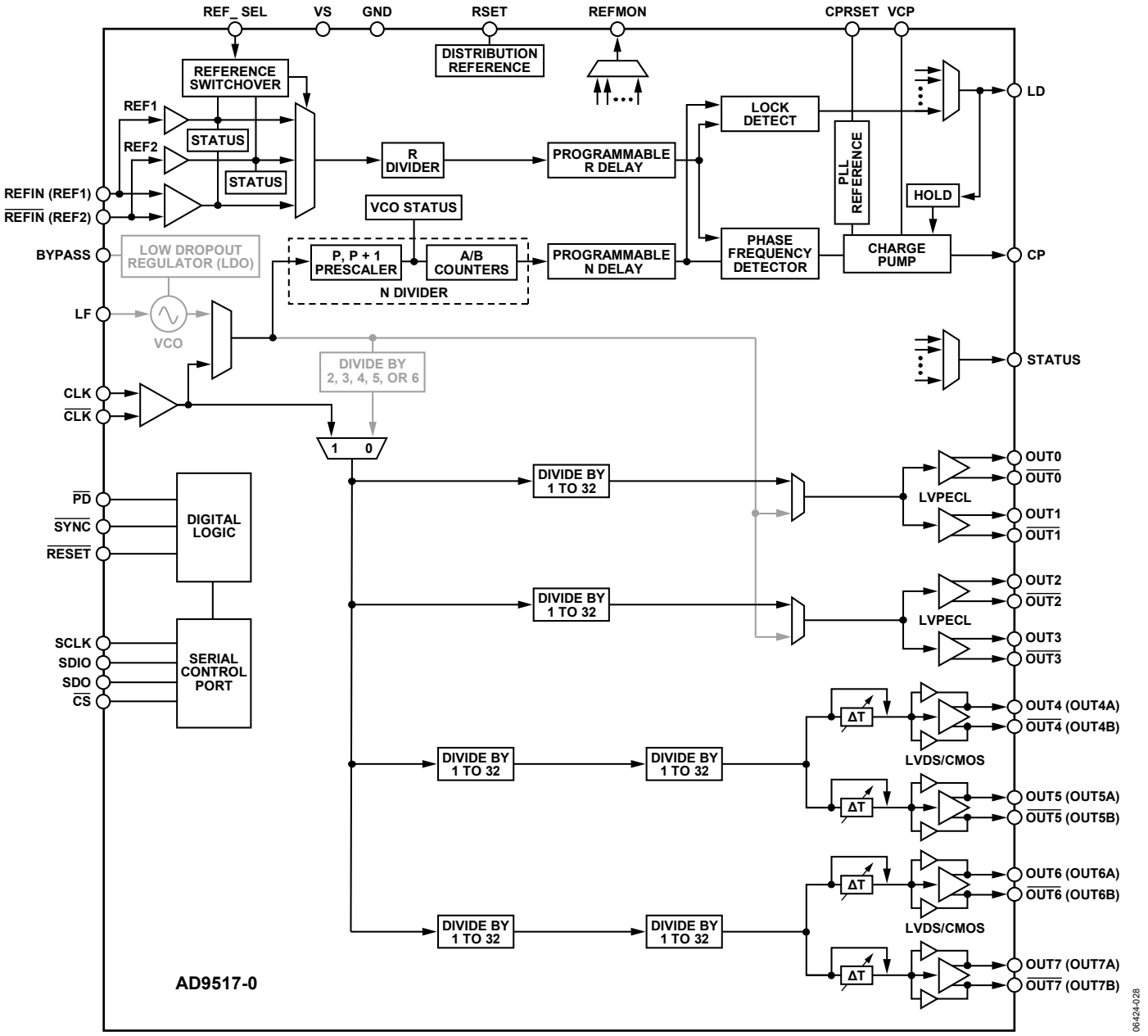

Figure 45. Clock Distribution or External VCO < 1600 MHz

Clock Distribution or External VCO < 1600 MHz

When the external clock source to be distributed or the external VCO/VCXO is less than 1600 MHz, a configuration that bypasses the VCO divider can be used. This configuration differs from the High Frequency Clock Distribution—CLK or External VCO > 1600 MHz section only in that the VCO divider (divide-by-2, divide-by-3, divide-by-4, divide-by-5, and divide-by-6) is bypassed. This limits the frequency of the clock source to <1600 MHz (due to the maximum input frequency allowed at the channel dividers).

Configuration and Register Settings

For clock distribution applications where the external clock is <1600 MHz, use the register settings that are shown in Table 25.

Table 25. Settings for Clock Distribution < 1600 MHz

Register	Function
0x010[1:0] = 01b	PLL asynchronous power-down (PLL off)
0x1E1[0] = 1b	Bypass the VCO divider as source for distribution section
0x1E1[1] = 0b	CLK selected as the source

When using the internal PLL with an external VCO of <1600 MHz, the PLL must be turned on.

Table 26. Settings for Using Internal PLL with External VCO < 1600 MHz

Register	Function
0x1E1[0] = 1b	Bypass the VCO divider as source for distribution section
0x010[1:0] = 00b	PLL normal operation (PLL on), along with other appropriate PLL settings in Register 0x010 to Register 0x01D

An external VCO/VCXO requires an external loop filter that must be connected between CP and the tuning pin of the VCO/VCXO. This loop filter determines the loop bandwidth and stability of the PLL. Make sure to select the proper PFD polarity for the VCO/VCXO being used.

Table 27. Setting the PFD Polarity

Register	Function
0x010[7] = 0b	PFD polarity positive (higher control voltage produces higher frequency)
0x010[7] = 1b	PFD polarity negative (higher control voltage produces lower frequency)

After the appropriate register values are programmed, Register 0x232 must be set to 0x01 for the values to take effect.

Phase-Locked Loop (PLL)

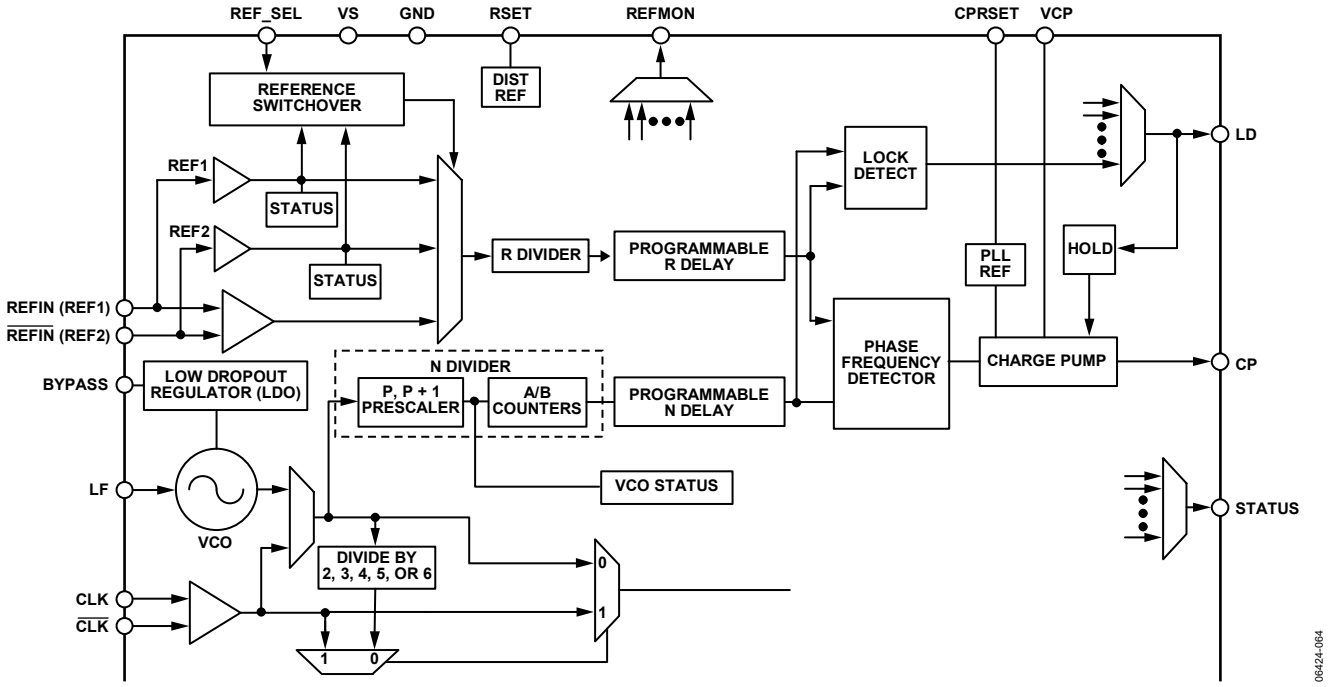

Figure 46. PLL Functional Blocks

The AD9517 includes an on-chip PLL with an on-chip VCO. The PLL blocks can be used either with the on-chip VCO to create a complete phase-locked loop, or with an external VCO or VCXO. The PLL requires an external loop filter, which usually consists of a small number of capacitors and resistors. The configuration and components of the loop filter help to establish the loop bandwidth and stability of the operating PLL.

The AD9517 PLL is useful for generating clock frequencies from a supplied reference frequency. This includes conversion of reference frequencies to much higher frequencies for subsequent division and distribution. In addition, the PLL can be exploited to clean up jitter and phase noise on a noisy reference. The exact choices of PLL parameters and loop dynamics are very application specific. The flexibility and depth of the AD9517 PLL allow the part to be tailored to function in many different applications and signal environments.

Configuration of the PLL

The AD9517 allows flexible configuration of the PLL, accommodating various reference frequencies, PFD comparison frequencies, VCO frequencies, internal or external VCO/VCXO, and loop dynamics. This is accomplished by the various settings that include the R divider, the N divider, the PFD polarity (only applicable to external VCO/VCXO), the antibacklash pulse width, the charge pump current, the selection of internal VCO or external VCO/VCXO, and the loop bandwidth.

These are managed through programmable register settings (see Table 52 and Table 54) and by the design of the external loop filter. Successful PLL operation and satisfactory PLL loop performance are highly dependent upon proper configuration of the PLL settings. The design of the external loop filter is crucial to the proper operation of the PLL. A thorough knowledge of PLL theory and design is helpful.

ADIsimCLK™ (V1.2 or later) is a free program that can help with the design and exploration of the capabilities and features of the AD9517, including the design of the PLL loop filter. It is available at www.analog.com/clocks.

Phase Frequency Detector (PFD)

The PFD takes inputs from the R counter and N counter and produces an output proportional to the phase and frequency difference between them. The PFD includes a programmable delay element that controls the width of the antibacklash pulse. This pulse ensures that there is no dead zone in the PFD transfer function and minimizes phase noise and reference spurs. The antibacklash pulse width is set by Register 0x017[1:0].

An important limit to keep in mind is the maximum frequency allowed into the PFD, which in turn determines the correct antibacklash pulse setting. The antibacklash pulse setting is specified in the phase/frequency detector parameter of Table 2.

Charge Pump (CP)

The charge pump is controlled by the PFD. The PFD monitors the phase and frequency relationship between its two inputs, and tells the CP to pump up or pump down to charge or discharge the integrating node (part of the loop filter). The integrated and filtered CP current is transformed into a voltage that drives the tuning node of the internal VCO through the LF pin (or the tuning pin of an external VCO) to move the VCO frequency up or down. The CP can be set (Register 0x010[6:4]) for high impedance (allows holdover operation), for normal operation (attempts to lock the PLL loop), for pump up, or for pump down (test modes). The CP current is programmable in eight steps from (nominally) 600 µA to 4.8 mA. The exact value of the CP current LSB is set by the CPRSET resistor, which is nominally 5.1 kΩ. If the value of the resistor connected to the CP_RSET pin is doubled, the resulting charge pump current range becomes 300 µA to 2.4 mA.

On-Chip VCO

The AD9517 includes an on-chip VCO covering the frequency range shown in Table 2. The calibration procedure ensures that the VCO operating voltage is centered for the desired VCO frequency. The VCO must be calibrated when the VCO loop is first set up, as well as any time the nominal VCO frequency changes. However, once the VCO is calibrated, the VCO has sufficient operating range to stay locked over temperature and voltage extremes without needing additional calibration. See the VCO Calibration section for additional information.

The on-chip VCO is powered by an on-chip, low dropout (LDO), linear voltage regulator. The LDO provides some isolation of the VCO from variations in the power supply voltage level. The BYPASS pin should be connected to ground by a 220 nF capacitor to ensure stability. This LDO employs the same technology used in the anyCAP® line of regulators from Analog Devices, Inc., making it insensitive to the type of capacitor used. Driving an external load from the BYPASS pin is not supported.

Note that the reference input signal must be present and the VCO divider must not be static during VCO calibration.

PLL External Loop Filter

When using the internal VCO, the external loop filter should be referenced to the BYPASS pin for optimal noise and spurious performance. An example of an external loop filter for a PLL that uses the internal VCO is shown in Figure 47. The third-order design shown in Figure 47 usually offers best performance. A loop filter must be calculated for each desired PLL configuration. The values of the components depend upon the VCO frequency, the K_{VCO}, the PFD frequency, the CP current, the desired loop bandwidth, and the desired phase margin. The loop filter affects the phase noise, loop settling time, and loop stability. A basic knowledge of PLL theory is helpful for understanding loop filter design. ADIsimCLK can help with the calculation of a loop filter according to the application requirements.

When using an external VCO, the external loop filter should be referenced to ground. See Figure 48 for an example of an external loop filter for a PLL using an external VCO.

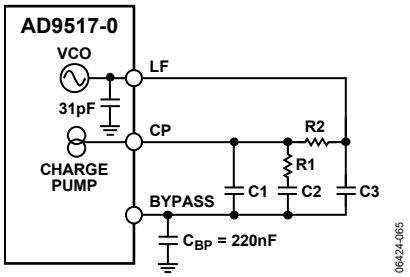

Figure 47. Example of External Loop Filter for a PLL Using the Internal VCO

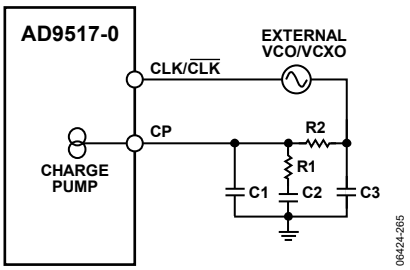

Figure 48. Example of External Loop Filter for a PLL Using an External VCO

PLL Reference Inputs

The AD9517 features a flexible PLL reference input circuit that allows either a fully differential input or two separate single-ended inputs. The input frequency range for the reference inputs is specified in Table 2. Both the differential and the single-ended inputs are self-biased, allowing for easy ac coupling of input signals.

The differential input and the single-ended inputs share the two pins, REFIN and $\overline{\text{REFIN}}$ (REF1 and REF2, respectively). The desired reference input type is selected and controlled by Register 0x01C (see Table 52 and Table 54).

When the differential reference input is selected, the self-bias level of the two sides is offset slightly (~100 mV, see Table 2) to prevent chattering of the input buffer when the reference is slow or missing. This increases the voltage swing that is required of the driver and overcomes the offset. The differential reference input can be driven by either ac-coupled LVDS or ac-coupled LVPECL signals.

The single-ended inputs can be driven by either a dc-coupled CMOS level signal or an ac-coupled sine wave or square wave. Each single-ended input can be independently powered down when not needed to increase isolation and reduce power. Either a differential or a single-ended reference must be specifically enabled. All PLL reference inputs are off by default.

The differential reference input is powered down whenever the PLL is powered down, or when the differential reference input is not selected. The single-ended buffers power down when the PLL is powered down, and when their individual power down

registers are set. When the differential mode is selected, the single-ended inputs are powered down.

In differential mode, the reference input pins are internally self-biased so that they can be ac-coupled via capacitors. It is possible to dc couple to these inputs. If the differential REFIN is driven by a single-ended signal, the unused side ($\overline{\text{REFIN}}$) should be decoupled via a suitable capacitor to a quiet ground. Figure 49 shows the equivalent circuit of REFIN.

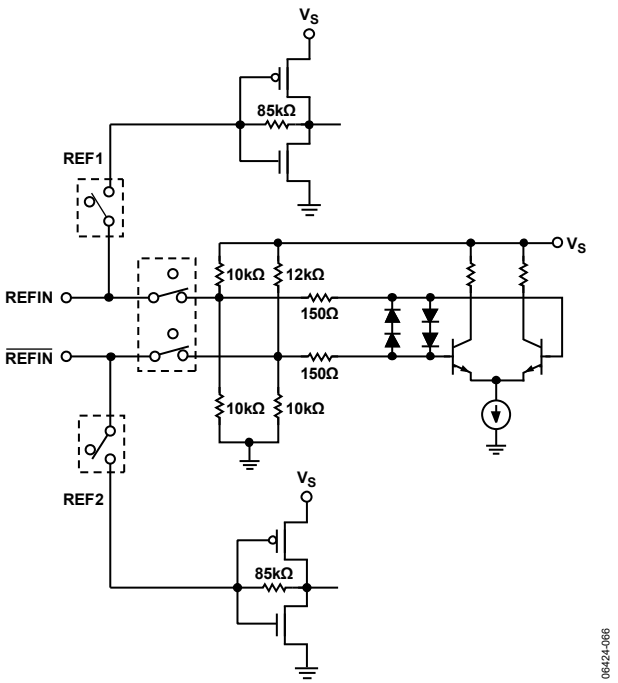

Figure 49. REFIN Equivalent Circuit

Reference Switchover

The AD9517 supports dual single-ended CMOS inputs, as well as a single differential reference input. In the dual single-ended reference mode, the AD9517 supports automatic and manual PLL reference clock switching between REF1 (on Pin REFIN) and REF2 (on Pin $\overline{\text{REFIN}}$). This feature supports networking and other applications that require smooth switching of redundant references. When used in conjunction with the automatic holdover function, the AD9517 can achieve a worst-case reference input switchover with an output frequency disturbance as low as 10 ppm.

When using reference switchover, the single-ended reference inputs should be dc-coupled CMOS levels and never be allowed to go to high impedance. If these inputs are allowed to go to high impedance, noise may cause the buffer to chatter, causing a false detection of the presence of a reference.

Reference switchover can be performed manually or automatically. Manual switchover is performed either through Register 0x01C or by using the REF_SEL pin. Manual switchover requires the presence of a clock on the reference input that is being switched to, or that the deglitching feature be disabled (Register 0x01C[7]). The reference switching logic fails if this condition is not met, and the PLL does not reacquire.

Automatic revertive switchover relies on the REFMON pin to indicate when REF1 disappears. By programming Register 0x01B = 0xF7 and Register 0x01C = 0x26, the REFMON pin is programmed to be high when REF1 is invalid, which commands the switch to REF2. When REF1 is valid again, the REFMON pin goes low, and the part again locks to REF1. It is also possible to use the STATUS pin for this function, and REF2 can be used as the preferred reference.

A switchover deglitch feature ensures that the PLL does not receive rising edges that are far out of alignment with the newly selected reference.

Automatic nonrevertive switching is not supported.

Reference Divider R

The reference inputs are routed to the reference divider, R. R (a 14-bit counter) can be set to any value from 0 to 16383 by writing to Register 0x011 and Register 0x012. (Both R = 0 and R = 1 give divide-by-1.) The output of the R divider goes to one of the PFD inputs to be compared to the VCO frequency divided by the N divider. The frequency applied to the PFD must not exceed the maximum allowable frequency, which depends on the antibacklash pulse setting (see Table 2).

The R counter has its own reset. R counter can be reset using the shared reset bit of the R, A, and B counters. It can also be reset by a $\overline{\text{SYNC}}$ operation.

VCXO/VCO Feedback Divider N—P, A, B, R

The N divider is a combination of a prescaler (P) and two counters, A and B. The total divider value is

$$N = (P \times B) + A$$

where the value of P can be 2, 4, 8, 16, or 32.

Prescaler

The prescaler of the AD9517 allows for two modes of operation: a fixed divide (FD) mode of 1, 2, or 3, and dual modulus (DM) mode where the prescaler divides by P and (P + 1) {2 and 3, 4 and 5, 8 and 9, 16 and 17, or 32 and 33}. The prescaler modes of operation are given in Table 54, Register 0x016[2:0]. Not all modes are available at all frequencies (see Table 2).

When operating the AD9517 in dual modulus mode (P//P + 1), the equation used to relate input reference frequency to VCO output frequency is

$$f_{VCO} = (f_{REF}/R) \times (P \times B + A) = f_{REF} \times N/R$$

However, when operating the prescaler in an FD mode of 1, 2, or 3, the A counter is not used (A = 0) and the equation simplifies to

$$f_{VCO} = (f_{REF}/R) \times (P \times B) = f_{REF} \times N/R$$

When A = 0, the divide is a fixed divide of P = 2, 4, 8, 16, or 32, in which case the previous equation also applies.

By using combinations of the DM and FD modes, the AD9517 can achieve values of N all the way down to N = 1 and up to N = 26,2175. Table 28 shows how a 10 MHz reference input can be locked to any integer multiple of N.

Note that the same value of N can be derived in different ways, as illustrated by the case of N = 12. The user can choose a fixed divide mode of P = 2 with B = 6; use the dual modulus mode of 2/3 with A = 0, B = 6; or use the dual modulus mode of 4/5 with A = 0, B = 3.

The maximum frequency into the prescaler in 2/3 dual-modulus mode is limited to 200 MHz. There are only two cases where this frequency limitation limits the flexibility of that N divider: N = 7 and N = 11. In these two cases, the maximum frequency into the prescaler is 300 MHz and is achieved by using the P = 1 FD mode. In all other cases, the user can achieve the desired N divider value by using the other prescaler modes.

A and B Counters

The B counter must be ≥3 or bypassed, and, unlike the R counter, A = 0 is actually zero.

When the prescaler is in dual-modulus mode, the A counter must be less than the B counter.

The maximum input frequency to the A/B counter is reflected in the maximum prescaler output frequency (~300 MHz) that is specified in Table 2. This is the prescaler input frequency (VCO or CLK) divided by P. For example, a dual modulus mode of P = 8/9 is not allowed if the VCO frequency is greater than 2400 MHz because the frequency going to the A/B counter is too high.

When the AD9517 B counter is bypassed (B = 1), the A counter should be set to 0, and the overall resulting divide is equal to the prescaler setting, P. The possible divide ratios in this mode are 1, 2, 3, 4, 8, 16, and 32. This mode is useful only when an external VCO/VCXO is used because the frequency range of the internal VCO requires an overall feedback divider greater than 32.

Although manual reset is not normally required, the A/B counters have their own reset bit. Alternatively, the A and B counters can be reset using the shared reset bit of the R, A, and B counters. Note that these reset bits are not self-clearing.

R, A, and B Counters—$\overline{\text{SYNC}}$ Pin Reset

The R, A, and B counters can also be reset simultaneously through the $\overline{\text{SYNC}}$ pin. This function is controlled by Register 0x019[7:6] (see Table 54). The $\overline{\text{SYNC}}$ pin reset is disabled by default.

R and N Divider Delays

Both the R and N dividers feature a programmable delay cell. These delays can be enabled to allow adjustment of the phase relationship between the PLL reference clock and the VCO or CLK. Each delay is controlled by three bits. The total delay range is about 1 ns. See Register 0x019 in Table 54.

Table 28. Using a 10 MHz Reference Input to Generate Different VCO Frequencies

f_{REF} (MHz)	R	P	A	B	N	f_{VCO} (MHz)	Mode	Comments/Conditions
10	1	1	X	1	1	10	FD	P = 1, B = 1 (A and B counters are bypassed).
10	1	2	X	1	2	20	FD	P = 2, B = 1 (A and B counters are bypassed).
10	1	1	X	3	3	30	FD	A counter is bypassed.
10	1	1	X	4	4	40	FD	A counter is bypassed.
10	1	1	X	5	5	50	FD	A counter is bypassed.
10	1	2	X	3	6	60	FD	A counter is bypassed.
10	1	2	0	3	6	60	DM	
10	1	2	1	3	7	70	DM	Maximum frequency into prescaler in P = 2/3 mode is 200 MHz. If N = 7 or N = 11 is desired for prescaler input frequency of 200 MHz to 300 MHz, use P = 1, and N = 7 or 11, respectively.
10	1	2	2	3	8	80	DM	
10	1	2	1	4	9	90	DM	
10	1	8	6	18	150	1500	DM	
10	1	8	7	18	151	1510	DM	
10	1	16	7	9	151	1510	DM	
10	10	32	6	47	1510	1510	DM	
10	1	8	0	25	200	2000	DM	
10	1	16	14	16	270	2700	DM	P = 8 is not allowed (2700 ÷ 8 > 300 MHz). P = 32 is not allowed (A > B not allowed).
10	10	32	22	84	2710	2710	DM	P = 32, A = 22, B = 84. P = 16 is also permitted.

DIGITAL LOCK DETECT (DLD)

By selecting the proper output through the mux on each pin, the DLD function can be made available at the LD, STATUS, and REFMON pins. The DLD circuit indicates a lock when the time difference of the rising edges at the PFD inputs is less than a specified value (the lock threshold). The loss of a lock is indicated when the time difference exceeds a specified value (the unlock threshold). Note that the unlock threshold is wider than the lock threshold, which allows some phase error in excess of the lock window to occur without chattering on the lock indicator.

The lock detect window timing depends on three settings: the digital lock detect window bit (Register 0x018[4]), the antibacklash pulse width setting (Register 0x017[1:0], see Table 2), and the lock detect counter (Register 0x018[6:5]). A lock is not indicated until there is a programmable number of consecutive PFD cycles with a time difference that is less than the lock detect threshold. The lock detect circuit continues to indicate a lock until a time difference greater than the unlock threshold occurs on a single subsequent cycle. For the lock detect to work properly, the period of the PFD frequency must be greater than the unlock threshold. The number of consecutive PFD cycles required for lock is programmable (Register 0x018[6:5]).

Analog Lock Detect (ALD)

The AD9517 provides an ALD function that can be selected for use at the LD pin. There are two versions of ALD, as follows:

- N-channel open-drain lock detect. This signal requires a pull-up resistor to the positive supply, V_S. The output is normally high with short, low-going pulses. Lock is indicated by the minimum duty cycle of the low-going pulses.
- P-channel open-drain lock detect. This signal requires a pull-down resistor to GND. The output is normally low with short, high-going pulses. Lock is indicated by the minimum duty cycle of the high-going pulses.

The analog lock detect function requires an R-C filter to provide a logic level indicating lock/unlock.

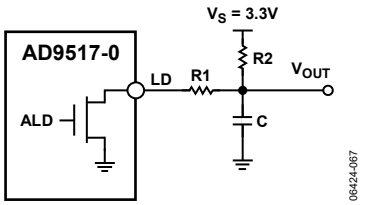

Figure 50. Example of Analog Lock Detect Filter Using N-Channel Open-Drain Driver

Current Source Digital Lock Detect (DLD)

During the PLL locking sequence, it is normal for the DLD signal to toggle a number of times before remaining steady when the PLL is completely locked and stable. There may be applications where it is desirable to have DLD asserted only after the PLL is solidly locked. This is made possible by using the current source lock detect function. This function is set when it is selected as the output from the LD pin control (Register 0x01A[5:0]).

The current source lock detect provides a current of 110 µA when DLD is true, and it shorts to ground when DLD is false. If a capacitor is connected to the LD pin, it charges at a rate that is determined by the current source during the DLD true time but is discharged nearly instantly when DLD is false. By monitoring the voltage at the LD pin (top of the capacitor), it is possible to get a logic high level only after the DLD has been true for a sufficiently long time. Any momentary DLD false resets the charging. By selecting a properly sized capacitor, it is possible to delay a lock detect indication until the PLL is stably locked and the lock detect does not chatter.

The voltage on the capacitor can be sensed by an external comparator connected to the LD pin. However, there is an internal LD pin comparator that can be read at the REFMON pin control (Register 0x01B[4:0]) or the STATUS pin control (Register 0x017[7:2]) as an active high signal. It is also available as an active low signal (REFMON, Register 0x01B[4:0] and STATUS, Register 0x017[7:2]). The internal LD pin comparator trip point and hysteresis are listed in Table 16.

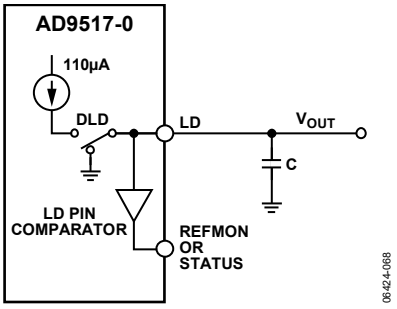

Figure 51. Current Source Lock Detect

External VCXO/VCO Clock Input (CLK/$\overline{\text{CLK}}$)

CLK is a differential input that can be used as an input to drive the AD9517 clock distribution section. This input can receive up to 2.4 GHz. The pins are internally self-biased, and the input signal should be ac-coupled via capacitors.

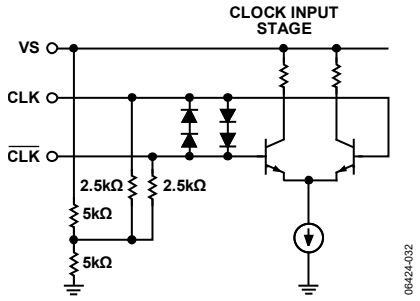

Figure 52. CLK Equivalent Input Circuit

The CLK/$\overline{\text{CLK}}$ input can be used either as a distribution-only input (with the PLL off), or as a feedback input for an external VCO/VCXO using the internal PLL when the internal VCO is not used. The CLK/$\overline{\text{CLK}}$ input can be used for frequencies up to 2.4 GHz.

Holdover

The AD9517 PLL has a holdover function. Holdover is implemented by putting the charge pump into a state of high impedance. This is useful when the PLL reference clock is lost. Holdover mode allows the VCO to maintain a relatively constant frequency even though there is no reference clock. Without this function, the charge pump is placed into a constant pump-up or pump-down state, resulting in a massive VCO frequency shift. Because the charge pump is placed in a high impedance state, any leakage that occurs at the charge pump output or the VCO tuning node causes a drift of the VCO frequency. This can be mitigated by using a loop filter that contains a large capacitive component because this drift is limited by the current leakage induced slew rate (I_{LEAK}/C) of the VCO control voltage. For most applications, the frequency accuracy is sufficient for 3 sec to 5 sec.

Both a manual holdover, using the $\overline{\text{SYNC}}$ pin, and an automatic holdover mode are provided. To use either function, the holdover function must be enabled (Register 0x01D[0] and Register 0x01D[2]).

Note that the VCO cannot be calibrated with the holdover enabled because the holdover resets the N divider during calibration, which prevents proper calibration. Disable holdover before issuing a VCO calibration.

Manual Holdover Mode

A manual holdover mode can be enabled that allows the user to place the charge pump into a high impedance state when the $\overline{\text{SYNC}}$ pin is asserted low. This operation is edge sensitive, not level sensitive. The charge pump enters a high impedance state immediately. To take the charge pump out of a high impedance state, take the $\overline{\text{SYNC}}$ pin high. The charge pump then leaves high impedance state synchronously with the next PFD rising edge from the reference clock. This prevents extraneous charge pump events from occurring during the time between $\overline{\text{SYNC}}$ going high and the next PFD event. This also means that the charge pump stays in a high impedance state as long as there is no reference clock present.

The B-counter (in the N divider) is reset synchronously with the charge pump leaving the high impedance state on the reference path PFD event. This helps align the edges out of the R and N dividers for faster settling of the PLL. Because the prescaler is not reset, this feature works best when the B and R numbers are close because this results in a smaller phase difference for the loop to settle out.

When using this mode, set the channel dividers to ignore the $\overline{\text{SYNC}}$ pin (at least after an initial $\overline{\text{SYNC}}$ event). If the dividers are not set to ignore the $\overline{\text{SYNC}}$ pin, the distribution outputs turn off each time $\overline{\text{SYNC}}$ is taken low to put the part into holdover.

Automatic/Internal Holdover Mode

When enabled, this function automatically puts the charge pump into a high impedance state when the loop loses lock. The assumption is that the only reason the loop loses lock is due to the PLL losing the reference clock; therefore, the holdover function puts the charge pump into a high impedance state to maintain the VCO frequency as close as possible to the original frequency before the reference clock disappears. See Figure 53 for a flowchart of the automatic/internal holdover function operation.

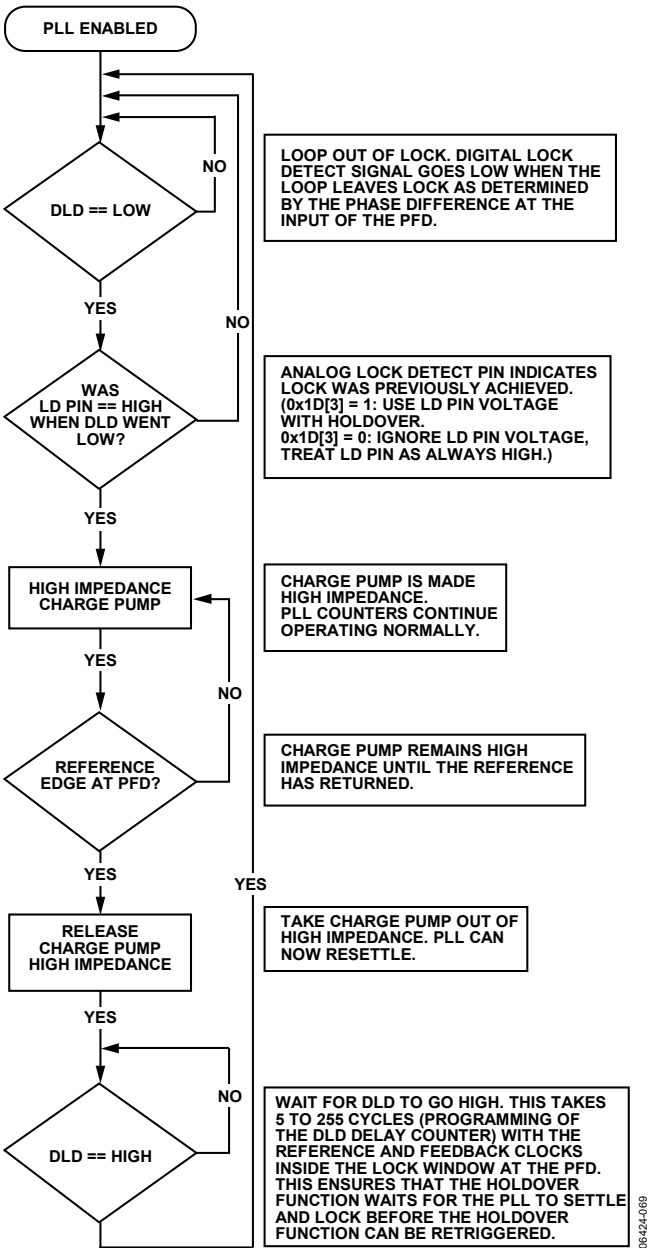

Figure 53. Flowchart of Automatic/Internal Holdover Mode

The holdover function senses the logic level of the LD pin as a condition to enter holdover. The signal at LD can be from the DLD, ALD, or current source LD mode. It is possible to disable the LD comparator (Register 0x01D[3]), which causes the holdover function to always sense LD as high. If DLD is used, it is possible for the DLD signal to chatter some while the PLL is reacquiring lock. The holdover function may retrigger, thereby preventing the holdover mode from ever terminating. Use of the current source lock detect mode is recommended to avoid this situation (see the Current Source Digital Lock Detect section).

Once in holdover mode, the charge pump stays in a high impedance state as long as there is no reference clock present.

As in the external holdover mode, the B counter (in the N divider) is reset synchronously with the charge pump leaving the high impedance state on the reference path PFD event. This helps align the edges out of the R and N dividers for faster settling of the PLL and to reduce frequency errors during settling. Because the prescaler is not reset, this feature works best when the B and R numbers are close because this results in a smaller phase difference for the loop to settle out.

After leaving holdover, the loop then reacquires lock and the LD pin must charge (if Register 0x01D[3] = 1) before it can re-enter holdover (CP high impedance).

The holdover function always responds to the state of the currently selected reference (Register 0x01C). If the loop loses lock during a reference switchover (see the Reference Switchover section), holdover is triggered briefly until the next reference clock edge at the PFD.

The following registers affect the internal/automatic holdover function:

- Register 0x018[6:5], lock detect counter. These bits change the number of consecutive PFD cycles with edges inside the lock detect window that are required for the DLD indicator to indicate lock. This impacts the time required before the LD pin can begin to charge as well as the delay from the end of a holdover event until the holdover function can be reengaged.
- Register 0x018[3], disable digital lock detect. This bit must be set to 0b to enable the DLD circuit. Internal/automatic holdover does not operate correctly without the DLD function enabled.
- Register 0x01A[5:0], lock detect pin output select. Set these bits to 000100b for the current source lock detect mode if using the LD pin comparator. Load the LD pin with a capacitor of an appropriate value.
- Register 0x01D[3], enable LD pin comparator. 1 = enable, 0 = disable. When disabled, the holdover function always senses the LD pin as high.
- Register 0x01D[1], enable external holdover control.
- Register 0x01D[0] and Register 0x01D[2], holdover function enable. If holdover is disabled, both external and internal/automatic holdover are disabled.

For example, to use automatic holdover with the following:

- Automatic reference switchover, prefer REF1
- Digital lock detect: five PFD cycles, high range window
- Automatic holdover using the LD pin comparator

Set the following registers (in addition to the normal PLL registers):

- Register 0x018[6:5] = 00b; lock detect counter = five cycles.
- Register 0x018[4] = 0b; lock detect window = high range.
- Register 0x018[3] = 0b; DLD normal operation.
- Register 0x01A[5:0] = 000100b; current source lock detect mode.
- Register 0x01B[7:0] = 0xF7; set REFMON pin to status of REF1 (active low).
- Register 0x01C[2:1] = 11b; enable REF1 and REF2 input buffers.
- Register 0x01D[3] = 1b; enable LD pin comparator.
- Register 0x01D[2]=1b; enable the holdover function.
- Register 0x01D[1] = 0b; use internal/automatic holdover mode.
- Register 0x01D[0] = 1b; enable the holdover function. (VCO calibration must be complete before this bit is enabled.)
- Connect REFMON pin to REFSEL pin.

Frequency Status Monitors

The AD9517 contains three frequency status monitors that are used to indicate if the PLL reference (or references in the case of single-ended mode) and the VCO have fallen below a threshold frequency. A diagram showing their location in the PLL is shown in Figure 54. The VCO status frequency monitor is also capable of monitoring the CLK input if the CLK input is selected as the input to the N divider.

The PLL reference frequency monitors have two threshold frequencies: normal and extended (see Table 16). The reference frequency monitor thresholds are selected in Register 0x01A. The frequency monitor status can be found in Register 0x01F, Bits[3:1].

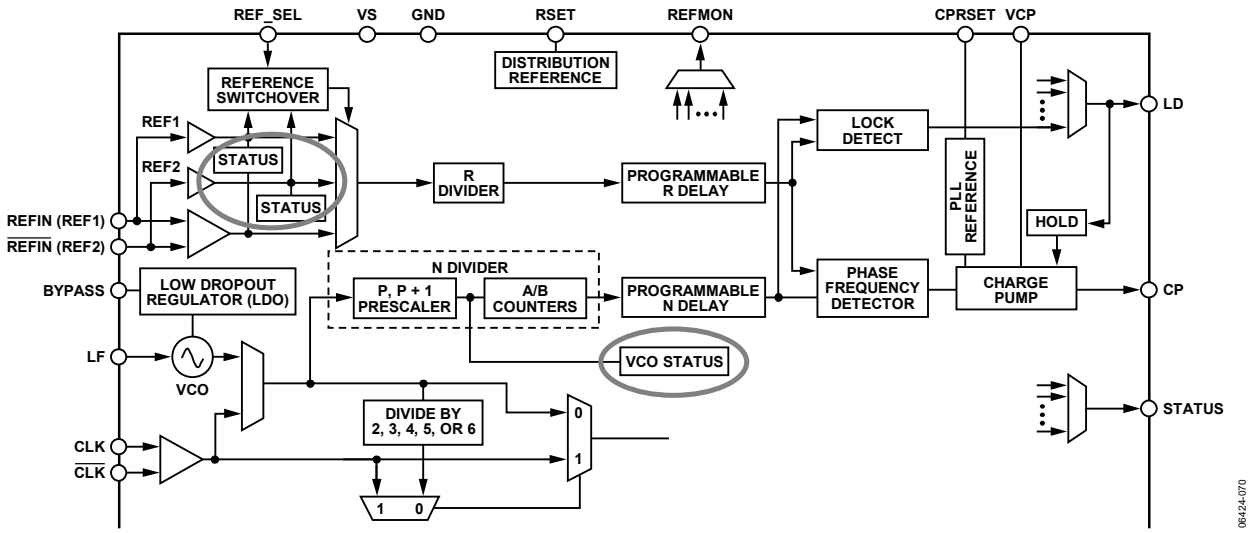

Figure 54. Reference and VCO Status Monitors

VCO Calibration

The AD9517 on-chip VCO must be calibrated to ensure proper operation over process and temperature. VCO calibration centers the dc voltage at the internal VCO input (at the LF pin) for the selected configuration; this is normally required only during initial configuration and any time the PLL settings change. VCO calibration is controlled by a calibration controller driven by the R divider output. The calibration requires that the input reference clock be present at the REFIN pins, and that the PLL be set up properly to lock the PLL loop. During the first initialization after a power-up or a reset of the AD9517, a VCO calibration sequence is initiated by setting Register 0x018[0] = 1b. This can be done during initial setup, before executing an update registers (Register 0x232[0] = 1b). Subsequent to initial setup, a VCO calibration sequence is initiated by resetting Register 0x018[0] = 0b, executing an update registers operation, setting Register 0x018[0] = 1b, and executing another update registers operation. A readback bit, Bit 6 in Register 0x1F, indicates when a VCO calibration is finished by returning a logic true (that is, 1b).

The sequence of operations for the VCO calibration is as follows:

1. Program the PLL registers to the proper values for the PLL loop. Note that that automatic holdover mode must be disabled, and the VCO divider must not be set to "Static."
2. Ensure that the input reference signal is present.
3. For the initial setting of the registers after a power-up or reset, initiate VCO calibration by setting Register 0x018[0] = 1b. Subsequently, whenever a calibration is desired, set Register 0x018[0] = 0b, update registers; and then set Register 0x018[0] = 1b, update registers.
4. A sync operation is initiated internally, causing the outputs to go to a static state determined by normal sync function operation.
5. The VCO calibrates to the desired setting for the requested VCO frequency.
6. Internally, the $\overline{\text{SYNC}}$ signal is released, allowing outputs to continue clocking.
7. The PLL loop is closed.
8. The PLL locks.

A sync is executed during the VCO calibration; therefore, the outputs of the AD9517 are held static during the calibration, which prevents unwanted frequencies from being produced. However, at the end of a VCO calibration, the outputs may resume clocking before the PLL loop is completely settled.

The VCO calibration clock divider is set as shown in Table 54 (Register 0x018[2:1]).

The calibration divider divides the PFD frequency (reference frequency divided by R) down to the calibration clock. The calibration occurs at the PFD frequency divided by the calibration divider setting. Lower VCO calibration clock frequencies result in longer times for a calibration to be completed.

The VCO calibration clock frequency is given by

$$f_{CAL_CLOCK} = f_{REFIN}/(R \times cal_div)$$

where:
f_{REFIN} is the frequency of the REFIN signal.
R is the value of the R divider.
cal_div is the division set for the VCO calibration divider (Register 0x018[2:1]).

The VCO calibration takes 4400 calibration clock cycles. Therefore, the VCO calibration time in PLL reference clock cycles is given by

Time to Calibrate VCO =

4400 × R × cal_div PLL Reference Clock Cycles

Table 29. Example Time to Complete a VCO Calibration with Different f_{REFIN} Frequencies

f_{REFIN} (MHz)	R Divider	PFD	Time to Calibrate VCO
100	1	100 MHz	88 µs
10	10	1 MHz	8.8 ms
10	100	100 kHz	88 ms

VCO calibration must be manually initiated. This allows for flexibility in deciding what order to program registers and when to initiate a calibration, instead of having it happen every time certain PLL registers have their values change. For example, this allows for the VCO frequency to be changed by small amounts without having an automatic calibration occur each time; this should be done with caution and only when the user knows that the VCO control voltage is not going to exceed the nominal best performance limits. For example, a few 100 kHz steps are fine, but a few MHz might not be. In addition, because the calibration procedure results in rapid changes in the VCO frequency, the distribution section is automatically placed in SYNC until the calibration is finished. Therefore, this temporary loss of outputs must be expected.

A VCO calibration should be initiated under the following conditions:

- After changing any of the PLL R, P, B, and A divider settings, or after a change in the PLL reference clock frequency. This, in effect, means any time a PLL register or reference clock is changed such that a different VCO frequency results.
- Whenever system calibration is desired. The VCO is designed to operate properly over extremes of temperatures even when it is first calibrated at the opposite extreme. However, a VCO calibration can be initiated at any time, if desired.

CLOCK DISTRIBUTION

A clock channel consists of a pair (or double pair, in the case of CMOS) of outputs that share a common divider. A clock output consists of the drivers that connect to the output pins. The clock outputs have either LVPECL or LVDS/CMOS signal levels at the pins.

The AD9517 has four clock channels: two channels are LVPECL (four outputs); two channels are LVDS/CMOS (up to four LVDS outputs or up to eight CMOS outputs).

Each channel has its own programmable divider that divides the clock frequency that is applied to its input. The LVPECL channel dividers can divide by any integer from 2 to 32, or the divider can be bypassed to achieve a divide by one. Each LVDS/CMOS channel divider contains two of these divider blocks in a cascaded configuration. The total division of the channel is the product of the divide value of the cascaded dividers. This allows divide values of (1 to 32) × (1 to 32), or up to 1024 (note that this is not all values from 1 to 1024 but only the set of numbers that are the product of the two dividers).

If the user wishes to use the channel dividers, the VCO divider must be used after the on-chip VCO. This is because the internal VCO frequency is above the maximum channel divider input frequency (1600 MHz). The VCO divider can be set to divide by 2, 3, 4, 5, or 6. External clock signals connected to the CLK input also require the VCO divider if the frequency of the signal is greater than 1600 MHz.

The channel dividers allow for a selection of various duty cycles, depending on the currently set division. That is, for any specific division, D, the output of the divider can be set to high for
N + 1 input clock cycles and low for M + 1 input clock cycles (where D = N + M + 2). For example, a divide-by-5 can be high for one divider input cycle and low for four cycles, or a divide-by-5 can be high for three divider input cycles and low for two cycles. Other combinations are also possible.

The channel dividers include a duty-cycle correction function that can be disabled. In contrast to the selectable duty cycle just described, this function can correct a non-50% duty cycle caused by an odd division. However, this requires that the division be set by M = N + 1.

In addition, the channel dividers allow a coarse phase offset or delay to be set. Depending on the division selected, the output can be delayed by up to 31 input clock cycles. The divider outputs can also be set to start high or start low.

Internal VCO or External CLK as Clock Source

The clock distribution of the AD9517 has two clock input sources: an internal VCO or an external clock connected to the CLK/$\overline{\text{CLK}}$ pins. Either the internal VCO or CLK must be chosen as the source of the clock signal to distribute. When the internal VCO is selected as the source, the VCO divider must be used. When CLK is selected as the source, it is not necessary to use the VCO divider if the CLK frequency is less than the maximum channel divider input frequency (1600 MHz); otherwise, the VCO divider must be used to reduce the frequency to one acceptable by the channel dividers. Table 30 shows how the VCO, CLK, and VCO divider are selected. Register 0x1E1[1:0] selects the channel divider source and determines whether the VCO divider is used. It is not possible to select the VCO without using the VCO divider.

Table 30. Selecting VCO or CLK as Source for Channel Divider, and Whether VCO Divider Is Used

Register 0x1E1			
Bit 1	**Bit 0**	**Channel Divider Source**	**VCO Divider**
0	0	CLK	Used
0	1	CLK	Not used
1	0	VCO	Used
1	1	Not allowed	Not allowed

CLK or VCO Direct to LVPECL Outputs

It is possible to connect either the internal VCO or the CLK (whichever is selected as the input to the VCO divider) directly to the LVPECL outputs, OUT0 to OUT3. This configuration can pass frequencies up to the maximum frequency of the VCO directly to the LVPECL outputs. The LVPECL outputs may not be able to provide a full voltage swing at the highest frequencies.

To connect the LVPECL outputs directly to the internal VCO or CLK, the VCO divider must be selected as the source to the distribution section, even if no channel uses it.

Either the internal VCO or the CLK can be selected as the source for the direct-to-output routing.

Table 31. Settings for Routing VCO Divider Input Directly to LVPECL Outputs

Register Setting	Selection
0x1E1[1:0] = 00b	CLK is the source; VCO divider selected
0x1E1[1:0] = 10b	VCO is the source; VCO divider selected
0x192[1] = 1b	Direct to OUT0 and OUT1 outputs
0x198[1] = 1b	Direct to OUT2 and OUT3 outputs

Clock Frequency Division

The total frequency division is a combination of the VCO divider (when used) and the channel divider. When the VCO divider is used, the total division from the VCO or CLK to the output is the product of the VCO divider (2, 3, 4, 5, and 6) and the division of the channel divider. Table 32 and Table 33 indicate how the frequency division for a channel is set. For the LVPECL outputs, there is only one divider per channel. For the LVDS/ CMOS outputs, there are two dividers (X.1, X.2) cascaded per channel.

Table 32. Frequency Division for Divider 0 and Divider 1

CLK or VCO Selected	VCO Divider	Channel Divider	Direct to Output	Frequency Division
CLK/VCO	2 to 6	1 (bypassed)	Yes	1
CLK/VCO	2 to 6	1 (bypassed)	No	(2 to 6) × (1)
CLK/VCO	2 to 6	2 to 32	No	(2 to 6) × (2 to 32)
CLK	Not used	1 (bypassed)	No	1
CLK	Not used	2 to 32	No	2 to 32

Table 33. Frequency Division for Divider 2 and Divider 3

CLK or VCO Selected	VCO Divider	Channel Divider		Frequency Division
		X.1	X.2	
CLK/VCO	2 to 6	1 (bypassed)	1 (bypassed)	(2 to 6) × (1) × (1)
CLK/VCO	2 to 6	2 to 32	1 (bypassed)	(2 to 6) × (2 to 32) × (1)
CLK/VCO	2 to 6	2 to 32	2 to 32	(2 to 6) × (2 to 32) × (2to 32)
CLK	Not used	1	1	1
CLK	Not used	2 to 32	1	(2 to 32) × (1)
CLK	Not used	2 to 32	2 to 32	2 to 32 × (2 to 32)

The channel dividers feeding the LVPECL output drivers contain one 2-to-32 frequency divider. This divider provides for division by 2 to 32. Division by 1 is accomplished by bypassing the divider. The dividers also provide for a programmable duty cycle, with optional duty-cycle correction when the divide ratio is odd. A phase offset or delay in increments of the input clock cycle is selectable. The channel dividers operate with a signal at their inputs up to 1600 MHz. The features and settings of the dividers are selected by programming the appropriate setup and control registers (see Table 52 through Table 62).

VCO Divider

The VCO divider provides frequency division between the internal VCO or the external CLK input and the clock distribution channel dividers. The VCO divider can be set to divide by 2, 3, 4, 5, or 6 (see Table 60, Register 0x1E0[2:0]).

Channel Dividers—LVPECL Outputs

Each pair of LVPECL outputs is driven by a channel divider. There are two channel dividers (0, 1) driving four LVPECL outputs (OUT0 to OUT3). Table 34 gives the register locations used for setting the division and other functions of these dividers. The division is set by the values of M and N. The divider can be bypassed (equivalent to divide-by-1, divider circuit is powered down) by setting the bypass bit. The duty-cycle correction can be enabled or disabled according to the setting of the DCCOFF bits.

Table 34. Setting D_X for Divider 0 and Divider 1[1]

Divider	Low Cycles M	High Cycles N	Bypass	DCCOFF
0	0x190[7:4]	0x190[3:0]	0x191[7]	0x192[0]
1	0x196[7:4]	0x196[3:0]	0x197[7]	0x198[0]

[1] Note that the value stored in the register = # of cycles minus 1.

Channel Frequency Division (0, 1)

For each channel (where the channel number is x: 0, 1), the frequency division, D_X, is set by the values of M and N (four bits each, representing Decimal 0 to Decimal 15), where

Number of Low Cycles = *M* + 1

Number of High Cycles = *N* + 1

The cycles are cycles of the clock signal currently routed to the input of the channel dividers (VCO divider out or CLK).

When a divider is bypassed, $D_X = 1$.

Otherwise, $D_X = (N + 1) + (M + 1) = N + M + 2$. This allows each channel divider to divide by any integer from 2 to 32.

Duty Cycle and Duty-Cycle Correction (0, 1)

The duty cycle of the clock signal at the output of a channel is a result of some or all of the following conditions:

- What are the M and N values for the channel?
- Is the DCC enabled?
- Is the VCO divider used?
- What is the CLK input duty cycle? (The internal VCO has a 50% duty cycle.)

The DCC function is enabled by default for each channel divider. However, the DCC function can be disabled individually for each channel divider by setting the DCCOFF bit for that channel.

Certain M and N values for a channel divider result in a non-50% duty cycle. A non-50% duty cycle can also result with an even division, if M ≠ N. The duty-cycle correction function automatically corrects non-50% duty cycles at the channel divider output to 50% duty cycle. Duty-cycle correction requires the following channel divider conditions:

- An even division must be set as M = N.
- An odd division must be set as M = N + 1.

When not bypassed or corrected by the DCC function, the duty cycle of each channel divider output is the numerical value of (N + 1)/(N + M + 2), expressed as a percentage (%).

The duty cycle at the output of the channel divider for various configurations is shown in Table 35 to Table 37.

Table 35. Duty Cycle with VCO Divider; Input Duty Cycle Is 50%

VCO Divider	D_X	Output Duty Cycle	
	N + M + 2	DCCOFF = 1	DCCOFF = 0
Even	1 (divider bypassed)	50%	50%
Odd = 3	1 (divider bypassed)	33.3%	50%
Odd = 5	1 (divider bypassed)	40%	50%
Even, Odd	Even	(N + 1)/(N + M + 2)	50%; requires M = N
Even, Odd	Odd	(N + 1)/(N + M + 2)	50%; requires M = N + 1

Table 36. Duty Cycle with VCO Divider; Input Duty Cycle Is X%

VCO Divider	D_X	Output Duty Cycle	
	N + M + 2	DCCOFF = 1	DCCOFF = 0
Even	1 (divider bypassed)	50%	50%
Odd = 3	1 (divider bypassed)	33.3%	(1 + X%)/3
Odd = 5	1 (divider bypassed)	40%	(2 + X%)/5
Even	Even	(N + 1)/(N + M + 2)	50%, requires M = N
	Odd	(N + 1)/(N + M + 2)	50%, requires M = N + 1
Odd = 3	Even	(N + 1)/(N + M + 2)	50%, requires M = N
Odd = 3	Odd	(N + 1)/(N + M + 2)	(3N + 4 + X%)/(6N + 9), requires M = N + 1
Odd = 5	Even	(N + 1)/(N + M + 2)	50%, requires M = N
Odd = 5	Odd	(N + 1)/(N + M + 2)	(5N + 7 + X%)/(10N + 15), requires M = N + 1

Table 37. Channel Divider Output Duty Cycle When the VCO Divider Is Not Used

Input Clock Duty Cycle	D_X	Output Duty Cycle	
	N + M + 2	DCCOFF = 1	DCCOFF = 0
Any	1	1 (divider bypassed)	Same as input duty cycle
Any	Even	(N + 1)/(M + N + 2)	50%, requires M = N
50%	Odd	(N + 1)/(M + N + 2)	50%, requires M = N + 1
X%	Odd	(N + 1)/(M + N + 2)	(N + 1 + X%)/(2 × N + 3), requires M = N + 1

The internal VCO has a duty cycle of 50%. Therefore, when the VCO is connected directly to the output, the duty cycle is 50%. If the CLK input is routed directly to the output, the duty cycle of the output is the same as the CLK input.

Phase Offset or Coarse Time Delay (0, 1)

Each channel divider allows for a phase offset, or a coarse time delay, to be programmed by setting register bits (see Table 38). These settings determine the number of cycles (successive rising edges) of the channel divider input frequency by which to offset, or delay, the rising edge of the output of the divider. This delay is with respect to a nondelayed output (that is, with a phase offset of zero). The amount of the delay is set by five bits loaded into the phase offset (PO) register plus the start high (SH) bit for each channel divider. When the start high bit is set, the delay is also affected by the number of low cycles (M) that are programmed for the divider.

The sync function must be used to make phase offsets effective (see the Synchronizing the Outputs—Sync Function section).

Table 38. Setting Phase Offset and Division for Divider 0 and Divider 1

Divider	Start High (SH)	Phase Offset (PO)	Low Cycles M	High Cycles N
0	0x191[4]	0x191[3:0]	0x190[7:4]	0x190[3:0]
1	0x197[4]	0x197[3:0]	0x196[7:4]	0x196[3:0]

Let
Δt = delay (in seconds).
Δc = delay (in cycles of clock signal at input to D_X).
T_X = period of the clock signal at the input of the divider, D_X (in seconds).
$\Phi = 16 \times SH[4] + 8 \times PO[3] + 4 \times PO[2] + 2 \times PO[1] + 1 \times PO[0]$

The channel divide-by is set as N = high cycles and M = low cycles.

Case 1

For $\Phi \leq 15$:
$\Delta t = \Phi \times T_X$
$\Delta c = \Delta t/T_X = \Phi$

Case 2

For $\Phi \geq 16$:
$\Delta t = (\Phi - 16 + M + 1) \times T_X$
$\Delta c = \Delta t/T_X$

By giving each divider a different phase offset, output-to-output delays can be set in increments of the channel divider input clock cycle. Figure 55 shows the results of setting such a coarse offset between outputs.

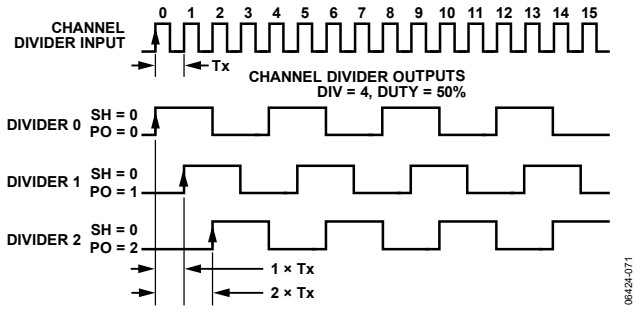

Figure 55. Effect of Coarse Phase Offset (or Delay)

Channel Dividers—LVDS/CMOS Outputs

Channel Divider 2 and Channel Divider 3 each drive a pair of LVDS outputs, giving a total of four LVDS outputs (OUT4 to OUT7). Alternatively, each of these LVDS differential outputs can be configured individually as a pair (A and B) of CMOS single-ended outputs, providing for up to eight CMOS outputs. By default, the B output of each pair is off but can be turned on as desired.

Channel Divider 2 and Channel Divider 3 each consist of two cascaded, 2 to 32, frequency dividers. The channel frequency division is $D_{X.1} \times D_{X.2}$ or up to 1024. Divide-by-1 is achieved by bypassing one or both of these dividers. Both of the dividers also have DCC enabled by default, but this function can be disabled, if desired, by setting the DCCOFF bit of the channel. A coarse phase offset or delay is also programmable (see the Phase Offset or Coarse Time Delay (Divider 2 and Divider 3) section). The channel dividers operate up to 1600 MHz. The features and settings of the dividers are selected by programming the appropriate setup and control registers (see Table 52 and Table 53 through Table 62).

Table 39. Setting Division (D_X) for Divider 2, Divider 3[1]

Divider		M	N	Bypass	DCCOFF
2	2.1	0x199[7:4]	0x199[3:0]	0x19C[4]	0x19D[0]
	2.2	0x19B[7:4]	0x19B[3:0]	0x19C[5]	0x19D[0]
3	3.1	0x19E[7:4]	0x19E[3:0]	0x1A1[4]	0x1A2[0]
	3.2	0x1A0[7:4]	0x1A0[3:0]	0x1A1[5]	0x1A2[0]

[1] Note that the value stored in the register = # of cycles minus 1.

Channel Frequency Division (Divider 2 and Divider 3)

The division for each channel divider is set by the bits in the registers for the individual dividers (X.Y = 2.1, 2.2, 3.1, and 3.2)

$$Number\ of\ Low\ Cycles = M_{X.Y} + 1$$

$$Number\ of\ High\ Cycles = N_{X.Y} + 1$$

When both X.1 and X.2 are bypassed, $D_X = 1 \times 1 = 1$.

When only X.2 is bypassed, $D_X = (N_{X.1} + M_{X.1} + 2) \times 1$.

When both X.1 and X.2 are not bypassed, $D_X = (N_{X.1} + M_{X.1} + 2) \times (N_{X.2} + M_{X.2} + 2)$.

By cascading the dividers, channel division up to 1024 can be obtained. However, not all integer value divisions from 1 to 1024 are obtainable; only the values that are the product of the separate divisions of the two dividers ($D_{X.1} \times D_{X.2}$) can be realized.

If only one divider is needed when using Divider 2 and Divider 3, use the first one (X.1) and bypass the second one (X.2). Do not bypass X.1 and use X.2.

Duty Cycle and Duty-Cycle Correction (Divider 2 and Divider 3)

The same duty cycle and DCC considerations apply to Divider 2 and Divider 3 as to Divider 0 and Divider 1 (see the Duty Cycle and Duty-Cycle Correction (0, 1) section); however, with these channel dividers, the number of possible configurations is even more complex.

Duty-cycle correction on Divider 2 and Divider 3 requires the following channel divider conditions:

- An even $D_{X.Y}$ must be set as $M_{X.Y} = N_{X.Y}$ (low cycles = high cycles).
- An odd $D_{X.Y}$ must be set as $M_{X.Y} = N_{X.Y} + 1$ (the number of low cycles must be one greater than the number of high cycles).
- If only one divider is bypassed, it must be the second divider, X.2.
- If only one divider has an even divide-by, it must be the second divider, X.2.

The possibilities for the duty cycle of the output clock from Divider 2 and Divider 3 are shown in Table 40 through Table 44.

Table 40. Divider 2 and Divider 3 Duty Cycle; VCO Divider Used; Duty Cycle Correction Off (DCCOFF = 1)

VCO Divider	$D_{X.1}$ $N_{X.1} + M_{X.1} + 2$	$D_{X.2}$ $N_{X.2} + M_{X.2} + 2$	Output Duty Cycle
Even	1	1	50%
Odd = 3	1	1	33.3%
Odd = 5	1	1	40%
Even	Even, odd	1	$(N_{X.1} + 1)/(N_{X.1} + M_{X.1} + 2)$
Odd	Even, odd	1	$(N_{X.1} + 1)/(N_{X.1} + M_{X.1} + 2)$
Even	Even, odd	Even, odd	$(N_{X.2} + 1)/(N_{X.2} + M_{X.2} + 2)$
Odd	Even, odd	Even, odd	$(N_{X.2} + 1)/(N_{X.2} + M_{X.2} + 2)$

Table 41. Divider 2 and Divider 3 Duty Cycle; VCO Divider Not Used; Duty Cycle Correction Off (DCCOFF = 1)

Input Clock Duty Cycle	$D_{X.1}$ $N_{X.1} + M_{X.1} + 2$	$D_{X.2}$ $N_{X.2} + M_{X.2} + 2$	Output Duty Cycle
50%	1	1	50%
X%	1	1	X%
50%	Even, odd	1	$(N_{X.1} + 1)/(N_{X.1} + M_{X.1} + 2)$
X%	Even, odd	1	$(N_{X.1} + 1)/(N_{X.1} + M_{X.1} + 2)$
50%	Even, odd	Even, odd	$(N_{X.2} + 1)/(N_{X.2} + M_{X.2} + 2)$
X%	Even, odd	Even, odd	$(N_{X.2} + 1)/(N_{X.2} + M_{X.2} + 2)$

Table 42. Divider 2 and Divider 3 Duty Cycle; VCO Divider Used; Duty Cycle Correction Is On (DCCOFF = 0); VCO Divider Input Duty Cycle = 50%

VCO Divider	$D_{X.1}$ $N_{X.1} + M_{X.1} + 2$	$D_{X.2}$ $N_{X.2} + M_{X.2} + 2$	Output Duty Cycle
Even	1	1	50%
Odd	1	1	50%
Even	Even ($N_{X.1} = M_{X.1}$)	1	50%
Odd	Even ($N_{X.1} = M_{X.1}$)	1	50%
Even	Odd ($M_{X.1} = N_{X.1} + 1$)	1	50%
Odd	Odd ($M_{X.1} = N_{X.1} + 1$)	1	50%
Even	Even ($N_{X.1} = M_{X.1}$)	Even ($N_{X.2} = M_{X.2}$)	50%
Odd	Even ($N_{X.1} = M_{X.1}$)	Even ($N_{X.2} = M_{X.2}$)	50%
Even	Odd ($M_{X.1} = N_{X.1} + 1$)	Even ($N_{X.2} = M_{X.2}$)	50%
Odd	Odd ($M_{X.1} = N_{X.1} + 1$)	Even ($N_{X.2} = M_{X.2}$)	50%
Even	Odd ($M_{X.1} = N_{X.1} + 1$)	Odd ($M_{X.2} = N_{X.2} + 1$)	50%
Odd	Odd ($M_{X.1} = N_{X.1} + 1$)	Odd ($M_{X.2} = N_{X.2} + 1$)	50%

Table 43. Divider 2 and Divider 3 Duty Cycle; VCO Divider Used; Duty Cycle Correction On (DCCOFF = 0); VCO Divider Input Duty Cycle = X%

VCO Divider	$D_{X.1}$ $N_{X.1} + M_{X.1} + 2$	$D_{X.2}$ $N_{X.2} + M_{X.2} + 2$	Output Duty Cycle
Even	1	1	50%
Odd = 3	1	1	(1 + X%)/3
Odd = 5	1	1	(2 + X%)/5
Even	Even ($N_{X.1} = M_{X.1}$)	1	50%
Odd	Even ($N_{X.1} = M_{X.1}$)	1	50%
Even	Odd ($M_{X.1} = N_{X.1} + 1$)	1	50%
Odd = 3	Odd ($M_{X.1} = N_{X.1} + 1$)	1	$(3N_{X.1} + 4 + X\%)/(6N_{X.1} + 9)$
Odd = 5	Odd ($M_{X.1} = N_{X.1} + 1$)	1	$(5N_{X.1} + 7 + X\%)/(10N_{X.1} + 15)$
Even	Even ($N_{X.1} = M_{X.1}$)	Even ($N_{X.2} = M_{X.2}$)	50%
Odd	Even ($N_{X.1} = M_{X.1}$)	Even ($N_{X.2} = M_{X.2}$)	50%
Even	Odd ($M_{X.1} = N_{X.1} + 1$)	Even ($N_{X.2} = M_{X.2}$)	50%
Odd	Odd ($M_{X.1} = N_{X.1} + 1$)	Even ($N_{X.2} = M_{X.2}$)	50%
Even	Odd ($M_{X.1} = N_{X.1} + 1$)	Odd ($M_{X.2} = N_{X.2} + 1$)	50%
Odd = 3	Odd ($M_{X.1} = N_{X.1} + 1$)	Odd ($M_{X.2} = N_{X.2} + 1$)	$(6N_{X.1}N_{X.2} + 9N_{X.1} + 9N_{X.2} + 13 + X\%)/(3(2N_{X.1} + 3)(2N_{X.2} + 3))$
Odd = 5	Odd ($M_{X.1} = N_{X.1} + 1$)	Odd ($M_{X.2} = N_{X.2} + 1$)	$(10N_{X.1}N_{X.2} + 15N_{X.1} + 15N_{X.2} + 22 + X\%)/(5(2N_{X.1} + 3)(2N_{X.2} + 3))$

Table 44. Divider 2 and Divider 3 Duty Cycle; VCO Divider Not Used; Duty Cycle Correction On (DCCOFF = 0)

Input Clock Duty Cycle	$D_{X.1}$ $N_{X.1} + M_{X.1} + 2$	$D_{X.2}$ $N_{X.2} + M_{X.2} + 2$	Output Duty Cycle
50%	1	1	50%
50%	Even ($N_{X.1} = M_{X.1}$)	1	50%
X%	1	1	X% (High)
X%	Even ($N_{X.1} = M_{X.1}$)	1	50%
50%	Odd ($M_{X.1} = N_{X.1} + 1$)	1	50%
X%	Odd ($M_{X.1} = N_{X.1} + 1$)	1	$(N_{X.1} + 1 + X\%)/(2N_{X.1} + 3)$
50%	Even ($N_{X.1} = M_{X.1}$)	Even ($N_{X.2} = M_{X.2}$)	50%
X%	Even ($N_{X.1} = M_{X.1}$)	Even ($N_{X.2} = M_{X.2}$)	50%
50%	Odd ($M_{X.1} = N_{X.1} + 1$)	Even ($N_{X.2} = M_{X.2}$)	50%
X%	Odd ($M_{X.1} = N_{X.1} + 1$)	Even ($N_{X.2} = M_{X.2}$)	50%
50%	Odd ($M_{X.1} = N_{X.1} + 1$)	Odd ($M_{X.2} = N_{X.2} + 1$)	50%
X%	Odd ($M_{X.1} = N_{X.1} + 1$)	Odd ($M_{X.2} = N_{X.2} + 1$)	$(2N_{X.1}N_{X.2} + 3N_{X.1} + 3N_{X.2} + 4 + X\%)/((2N_{X.1} + 3)(2N_{X.2} + 3))$

Phase Offset or Coarse Time Delay (Divider 2 and Divider 3)

Divider 2 and Divider 3 can be set to have a phase offset or delay. The phase offset is set by a combination of the bits in the phase offset and start high registers (see Table 45).

Table 45. Setting Phase Offset and Division for Divider 2 and Divider 3

Divider		Start High (SH)	Phase Offset (PO)	Low Cycles M	High Cycles N
2	2.1	0x19C[0]	0x19A[3:0]	0x199[7:4]	0x199[3:0]
	2.2	0x19C[1]	0x19A[7:4]	0x19B[7:4]	0x19B[3:0]
3	3.1	0x1A1[0]	0x19F[3:0]	0x19E[7:4]	0x19E[3:0]
	3.2	0x1A1[1]	0x19F[7:4]	0x1A0[7:4]	0x1A0[3:0]

Let

Δt = delay (in seconds).

$\Phi_{x.y} = 16 \times SH[0] + 8 \times PO[3] + 4 \times PO[2] + 2 \times PO[1] + 1 \times PO[0]$.

$T_{X.1}$ = period of the clock signal at the input to $D_{X.1}$ (in seconds).

$T_{X.2}$ = period of the clock signal at the input to $D_{X.2}$ (in seconds).

Case 1

When $\Phi_{x.1} \leq 15$ and $\Phi_{x.2} \leq 15$:

$$\Delta t = \Phi_{x.1} \times T_{X.1} + \Phi_{X.2} \times T_{x.2}$$

Case 2

When $\Phi_{x.1} \leq 15$ and $\Phi_{x.2} \geq 16$:

$$\Delta t = \Phi_{X.1} \times T_{X.1} + (\Phi_{X.2} - 16 + M_{X.2} + 1) \times T_{X.2}$$

Case 3

When $\Phi_{X.1} \geq 16$ and $\Phi_{X.2} \leq 15$:

$$\Delta t = (\Phi_{X.1} - 16 + M_{X.1} + 1) \times T_{X.1} + \Phi_{X.2} \times T_{X.2}$$

Case 4

When $\Phi_{X.1} \geq 16$ and $\Phi_{X.2} \geq 16$:

$\Delta t =$

$$(\Phi_{X.1} - 16 + M_{X.1} + 1) \times T_{X.1} + (\Phi_{X.2} - 16 + M_{X.2} + 1) \times T_{X.2}$$

Fine Delay Adjust (Divider 2 and Divider 3)

Each AD9517 LVDS/CMOS output (OUT4 to OUT7) includes an analog delay element that can be programmed to give variable time delays (Δt) in the clock signal at that output.

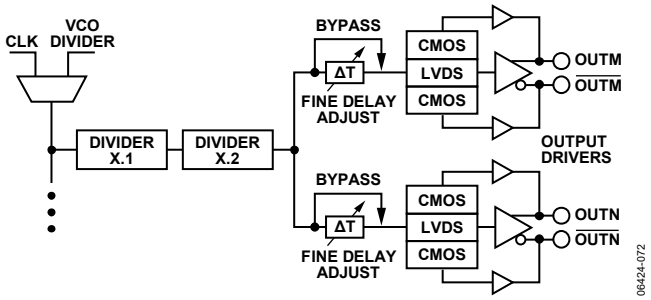

Figure 56. Fine Delay (OUT4 to OUT7)

The amount of delay applied to the clock signal is determined by programming four registers per output (see Table 46).

Table 46. Setting Analog Fine Delays

OUTPUT (LVDS/CMOS)	Ramp Capacitors	Ramp Current	Delay Fraction	Delay Bypass
OUT4	0x0A1[5:3]	0x0A1[2:0]	0x0A2[5:0]	0x0A0[0]
OUT5	0x0A4[5:3]	0x0A4[2:0]	0x0A5[5:0]	0x0A3[0]
OUT6	0x0A7[5:3]	0x0A7[2:0]	0x0A8[5:0]	0x0A6[0]
OUT7	0x0AA[5:3]	0x0AA[2:0]	0x0AB[5:0]	0x0A9[0]

Calculating the Fine Delay

The following values and equations are used to calculate the delay of the delay block.

I_{RAMP} (µA) = 200 × (*Ramp Current* + 1)

Number of Capacitors = *Number of Bits* = 0 in *Ramp Capacitor*s + 1

Example: 101 = 1 + 1 = 2; 110 = 1 + 1 = 2; 100 = 2 + 1 = 3; 001 = 2 + 1 = 3; 111 = 0 + 1 = 1.

Delay Range (ns) = 200 × ((*No. of Caps* + 3)/(I_{RAMP})) × 1.3286

$$Offset\ (\text{ns}) = 0.34 + \left(1600 - I_{RAMP}\right) \times 10^{-4} + \left(\frac{No.of\ Caps - 1}{I_{RAMP}}\right) \times 6$$

Delay Full Scale (ns) = *Delay Range* + *Offset*

Fine Delay (ns) = *Delay Range* × *Delay Fraction* × (1/63) + *Offset*

Note that only delay fraction values up to 47 decimal (101111b; 0x2F) are supported.

In no case can the fine delay exceed one-half of the output clock period. If a delay longer than half of the clock period is attempted, the output stops clocking.

The delay function adds some jitter that is greater than that specified for the nondelayed output. This means that the delay function should be used primarily for clocking digital chips, such as FPGA, ASIC, DUC, and DDC. An output with this delay enabled may not be suitable for clocking data converters. The jitter is higher for long full scales because the delay block uses a ramp and trip points to create the variable delay. A slower ramp time produces more time jitter.

Synchronizing the Outputs—Sync Function

The AD9517 clock outputs can be synchronized to each other. Outputs can be individually excluded from synchronization. Synchronization consists of setting the nonexcluded outputs to a preset set of static conditions and subsequently releasing these outputs to continue clocking at the same instant with the preset conditions applied. This allows for the alignment of the edges of two or more outputs or for the spacing of edges according to the coarse phase offset settings for two or more outputs.

Synchronization of the outputs is executed in several ways, as follows:

- By forcing the $\overline{\text{SYNC}}$ pin low and then releasing it (manual sync).
- By setting and then resetting any one of the following three bits: the soft sync bit (Register 0x230[0]), the soft reset bit (Register 0x000[2] [mirrored]), and the power-down distribution reference bit (Register 0x230[1]).
- By executing synchronization of the outputs as part of the chip power-up sequence.
- By forcing the $\overline{\text{RESET}}$ pin low and then releasing it (chip reset).
- By forcing the $\overline{\text{PD}}$ pin low and then releasing it (chip power-down).
- Following completion of a VCO calibration. An internal SYNC signal is automatically asserted at the beginning of a VCO calibration and then released upon its completion.

The most common way to execute the sync function is to use the $\overline{\text{SYNC}}$ pin to do a manual synchronization of the outputs. This requires a low-going signal on the $\overline{\text{SYNC}}$ pin, which is held low and then released when synchronization is desired. The timing of the sync operation is shown in Figure 57 (using VCO divider) and Figure 58 (VCO divider not used). There is an uncertainty of up to one cycle of the clock at the input to the channel divider due to the asynchronous nature of the SYNC signal with respect to the clock edges inside the AD9517. The delay from the $\overline{\text{SYNC}}$ rising edge to the beginning of synchronized output clocking is between 14 and 15 cycles of clock at the channel divider input, plus either one cycle of the VCO divider input (see Figure 57), or one cycle of the channel divider input (see Figure 58), depending on whether the VCO divider is used. Cycles are counted from the rising edge of the signal.

Another common way to execute the sync function is by setting and resetting the soft sync bit at Register 0x230[0] (see Table 53 through Table 62 for details). Both the setting and resetting of the soft sync bit require an update all registers operation (Register 0x232[0] = 1) to take effect.

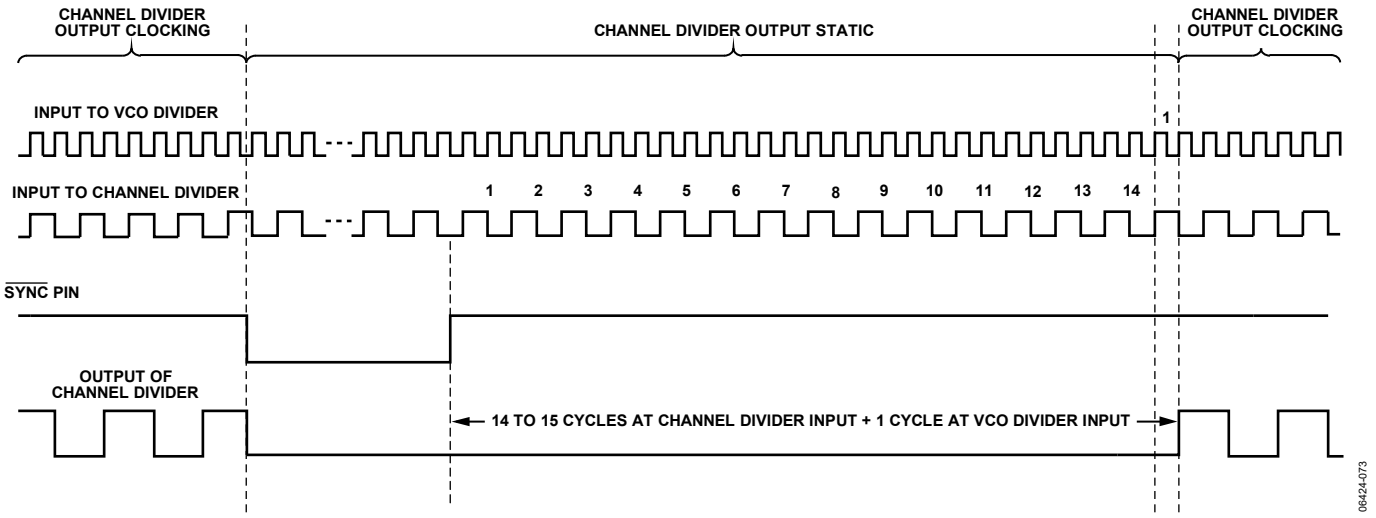

Figure 57. SYNC Timing When VCO Divider Is Used—CLK or VCO Is Input

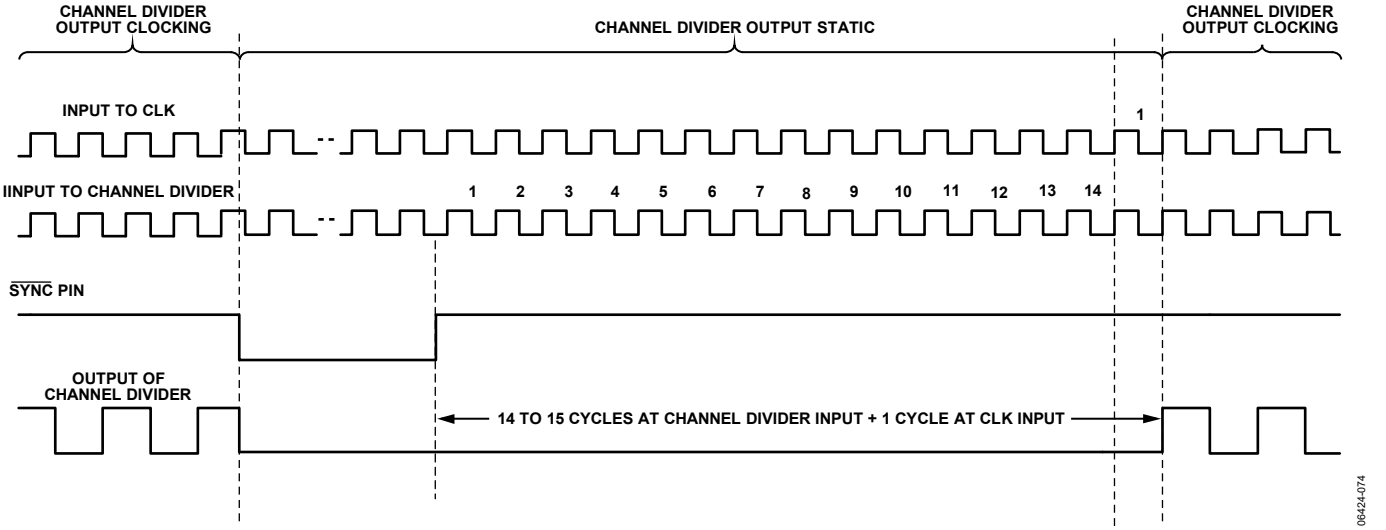

Figure 58. SYNC Timing When VCO Divider Is Not Used—CLK Input Only

A sync operation brings all outputs that have not been excluded (by the nosync bit) to a preset condition before allowing the outputs to begin clocking in synchronicity. The preset condition takes into account the settings in each of the channel's start high bit and its phase offset. These settings govern both the static state of each output when the sync operation is happening and the state and relative phase of the outputs when they begin clocking again upon completion of the sync operation. Between outputs and after synchronization, this allows for the setting of phase offsets.

The AD9517 outputs are in pairs, sharing a channel divider per pair (two pairs of pairs, four outputs, in the case of CMOS). The synchronization conditions apply to both outputs of a pair.

Each channel (a divider and its outputs) can be excluded from any sync operation by setting the nosync bit of the channel. Channels that are set to ignore SYNC (excluded channels) do not set their outputs static during a sync operation, and their outputs are not synchronized with those of the nonexcluded channels.

Clock Outputs

The AD9517 offers three different output level choices: LVPECL, LVDS, and CMOS. OUT0 to OUT3 are LVPECL differential outputs; and OUT4 to OUT7 are LVDS/CMOS outputs. These outputs can be configured as either LVDS differential or as pairs of single-ended CMOS outputs.

LVPECL Outputs—OUT0 to OUT3

The LVPECL differential voltage (V_{OD}) is selectable from ~400 mV to ~960 mV (see Register 0x0F0[3:2] to Register 0x0F5[3:2]). The LVPECL outputs have dedicated pins for power supply (VS_LVPECL), allowing a separate power supply to be used. V_{S_LVPECL} can be from 2.5 V to 3.3 V.

The LVPECL output polarity can be set as noninverting or inverting, which allows for the adjustment of the relative polarity of outputs within an application without requiring a board layout change. Each LVPECL output can be powered down or powered up as needed. Because of the architecture of the LVPECL output stages, there is the possibility of electrical overstress and breakdown under certain power-down conditions. For this reason, the LVPECL outputs have several power-down modes. This includes a safe power-down mode that continues to protect the output devices while powered down, although it consumes somewhat more power than a total power-down. If the LVPECL output pins are terminated, it is best to select the safe power-down mode. If the pins are left floating (i.e., not connected), total power-down mode is fine.

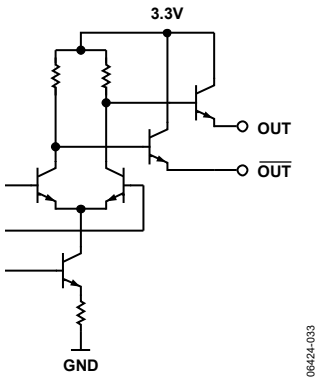

Figure 59. LVPECL Output Simplified Equivalent Circuit

LVDS/CMOS Outputs—OUT4 to OUT7

OUT4 to OUT7 can be configured as either an LVDS differential output or as a pair of CMOS single-ended outputs. The LVDS outputs allow for selectable output current from ~1.75 mA to ~7 mA.

The LVDS output polarity can be set as noninverting or inverting, which allows for the adjustment of the relative polarity of outputs within an application without requiring a board layout change. Each LVDS output can be powered down if not needed to save power.

OUT4 to OUT7 can also be CMOS outputs. Each LVDS output can be configured to be two CMOS outputs. This provides for up to eight CMOS outputs: OUT4A, OUT4B, OUT5A, OUT5B, OUT6A, OUT6B, OUT7A, and OUT7B. When an output is configured as CMOS, CMOS Output A is automatically turned on. CMOS Output B can be turned on or off independently. The relative polarity of the CMOS outputs can also be selected for any combination of inverting and noninverting (see Table 57, Register 0x140[7:5], Register 0x141[7:5], Register 0x142[7:5], and Register 0x143[7:5]).

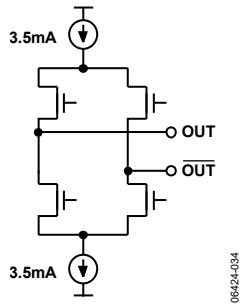

Figure 60. LVDS Output Simplified Equivalent Circuit with 3.5 mA Typical Current Source

Each LVDS/CMOS output can be powered-down, as needed, to save power. The CMOS output power-down is controlled by the same bit that controls the LVDS power-down for that output. This power-down control affects both CMOS Output A and CMOS Output B. However, when CMOS Output A is powered up, CMOS Output B can be powered on or off separately.

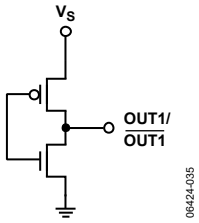

Figure 61. CMOS Equivalent Output Circuit

RESET MODES

The AD9517 has several ways to force the chip into a reset condition that restores all registers to their default values and makes these settings active.

Power-On Reset—Start-Up Conditions When V_S Is Applied

A power-on reset (POR) is issued when the V_S power supply is turned on. This initializes the chip to the power-on conditions that are determined by the default register settings. These are indicated in the Default Value (Hex) column of Table 52. At power-on, the AD9517 also executes a sync operation, which brings the outputs into phase alignment according to the default settings.

Asynchronous Reset via the $\overline{\text{RESET}}$ Pin

An asynchronous hard reset is executed by momentarily pulling $\overline{\text{RESET}}$ low. A reset restores the chip registers to the default settings.

Soft Reset via Register 0x00[2]

A soft reset is executed by writing Register 0x000[2] and Register 0x000[5] = 1b. This bit is not self-clearing; it must be cleared by writing Register 0x000[2] and Register 0x000[5] = 0b to reset it and complete the soft reset operation. A soft reset restores the default values to the internal registers. The soft reset bit does not require an update registers command (Register 0x232) to be issued.

POWER-DOWN MODES

Chip Power-Down via $\overline{PD}$

The AD9517 can be put into a power-down condition by pulling the $\overline{PD}$ pin low. Power-down turns off most of the functions and currents inside the AD9517. The chip remains in this power-down state until $\overline{PD}$ is brought back to logic high. When the AD9517 wakes up, it returns to the settings programmed into its registers prior to the power-down, unless the registers are changed by new programming while the $\overline{PD}$ pin is held low.

The $\overline{PD}$ power-down shuts down the currents on the chip, except the bias current that is necessary to maintain the LVPECL outputs in a safe shutdown mode. This is needed to protect the LVPECL output circuitry from damage that could be caused by certain termination and load configurations when tristated. Because this is not a complete power-down, it can be called sleep mode.

When the AD9517 is in a $\overline{PD}$ power-down, the chip is in the following state:

- The PLL is off (asynchronous power-down).
- The VCO is off.
- The CLK input buffer is off.
- All dividers are off.
- All LVDS/CMOS outputs are off.
- All LVPECL outputs are in safe off mode.
- The serial control port is active, and the chip responds to commands.

If the AD9517 clock outputs must be synchronized to each other, a SYNC is required upon exiting power-down (see the Synchronizing the Outputs—Sync Function section). A VCO calibration is not required when exiting power-down.

PLL Power-Down

The PLL section of the AD9517 can be selectively powered down. There are three PLL operating modes set by Register 0x010[1:0], as shown in Table 54.

In asynchronous power-down mode, the device powers down as soon as the registers are updated.

In synchronous power-down mode, the PLL power-down is gated by the charge pump to prevent unwanted frequency jumps. The device goes into power-down on the occurrence of the next charge pump event after the registers are updated.

Distribution Power-Down

The distribution section can be powered down by writing Register 0x230[1] = 1b. This turns off the bias to the distribution section. If the LVPECL power-down mode is normal operation (00b), it is possible for a low impedance load on that LVPECL output to draw significant current during this power-down. If the LVPECL power-down mode is set to 11b, the LVPECL output is not protected from reverse bias and may be damaged under certain termination conditions.

Individual Clock Output Power-Down

Any of the clock distribution outputs can be powered down individually by writing to the appropriate registers. The register map details the individual power-down settings for each output (see Table 52). The LVDS/CMOS outputs can be powered down, regardless of their output load configuration.

The LVPECL outputs have multiple power-down modes (see Table 56), which give some flexibility in dealing with the various output termination conditions. When the mode is set to 10b, the LVPECL output is protected from reverse bias to 2 VBE + 1 V. If the mode is set to 11b, the LVPECL output is not protected from reverse bias and can be damaged under certain termination conditions. This setting also affects the operation when the distribution block is powered down with Register 0x230[1] = 1b (see the Distribution Power-Down section).

Individual Circuit Block Power-Down

Other AD9517 circuit blocks (such as CLK, REF1, and REF2) can be powered down individually. This gives flexibility in configuring the part for power savings whenever certain chip functions are not needed.

SERIAL CONTROL PORT

The AD9517 serial control port is a flexible, synchronous, serial communications port that allows an easy interface with many industry-standard microcontrollers and microprocessors. The AD9517 serial control port is compatible with most synchronous transfer formats, including both the Motorola SPI® and Intel® SSR® protocols. The serial control port allows read/write access to all registers that configure the AD9517. Single or multiple byte transfers are supported, as well as MSB first or LSB first transfer formats. The AD9517 serial control port can be configured for a single bidirectional I/O pin (SDIO only) or for two unidirectional I/O pins (SDIO/SDO). By default, the AD9517 is in bidirectional mode, long instruction (long instruction is the only instruction mode supported).

SERIAL CONTROL PORT PIN DESCRIPTIONS

SCLK (serial clock) is the serial shift clock. This pin is an input. SCLK is used to synchronize serial control port reads and writes. Write data bits are registered on the rising edge of this clock, and read data bits are registered on the falling edge. This pin is internally pulled down by a 30 kΩ resistor to ground.

SDIO (serial data input/output) is a dual-purpose pin that acts as either an input only (unidirectional mode) or as both an input/output (bidirectional mode). The AD9517 defaults to the bidirectional I/O mode (Register 0x000[0] = 0b).

SDO (serial data out) is used only in the unidirectional I/O mode (Register 0x000[0] = 1b) as a separate output pin for reading back data.

$\overline{CS}$ (chip select bar) is an active low control that gates the read and write cycles. When $\overline{CS}$ is high, SDO and SDIO are in a high impedance state. This pin is internally pulled up by a 30 kΩ resistor to V_S.

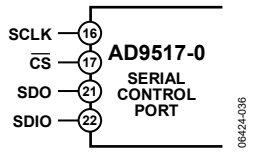

Figure 62. Serial Control Port

GENERAL OPERATION OF SERIAL CONTROL PORT

A write or a read operation to the AD9517 is initiated by pulling $\overline{CS}$ low.

$\overline{CS}$ stalled high is supported in modes where three or fewer bytes of data (plus instruction data) are transferred (see Table 47). In these modes, $\overline{CS}$ can temporarily return high on any byte boundary, allowing time for the system controller to process the next byte. $\overline{CS}$ can go high on byte boundaries only and can go high during either part (instruction or data) of the transfer. During this period, the serial control port state machine enters a wait state until all data is sent. If the system controller decides to abort the transfer before all of the data is sent, the state machine must be reset, either by completing the remaining transfers or by returning $\overline{CS}$ low for at least one complete SCLK cycle (but less than eight SCLK cycles). Raising $\overline{CS}$ on a nonbyte boundary terminates the serial transfer and flushes the buffer.

In the streaming mode (see Table 47), any number of data bytes can be transferred in a continuous stream. The register address is automatically incremented or decremented (see the MSB/LSB First Transfers section). $\overline{CS}$ must be raised at the end of the last byte to be transferred, thereby ending the stream mode.

Communication Cycle—Instruction Plus Data

There are two parts to a communication cycle with the AD9517. The first part writes a 16-bit instruction word into the AD9517, coincident with the first 16 SCLK rising edges. The instruction word provides the AD9517 serial control port with information regarding the data transfer, which is the second part of the communication cycle. The instruction word defines whether the upcoming data transfer is a read or a write, the number of bytes in the data transfer, and the starting register address for the first byte of the data transfer.

Write

If the instruction word is for a write operation, the second part is the transfer of data into the serial control port buffer of the AD9517. Data bits are registered on the rising edge of SCLK.

The length of the transfer (1, 2, 3 bytes or streaming mode) is indicated by two bits ([W1:W0]) in the instruction byte. When the transfer is 1, 2, or 3 bytes, but not streaming, $\overline{CS}$ can be raised after each sequence of eight bits to stall the bus (except after the last byte, where it ends the cycle). When the bus is stalled, the serial transfer resumes when $\overline{CS}$ is lowered. Raising $\overline{CS}$ on a nonbyte boundary resets the serial control port. During a write, streaming mode does not skip over reserved or blank registers; therefore, the user must know the bit pattern to write to the reserved registers to preserve proper operation of the part. Refer to the control register map (see Table 52) to determine if the default value for reserved registers is nonzero. It does not matter what data is written to blank registers.

Because data is written into a serial control port buffer area, and not directly into the actual control registers of the AD9517, an additional operation is needed to transfer the serial control port buffer contents to the actual control registers of the AD9517, thereby causing them to become active. The update registers operation consists of setting Register 0x232[0] = 1b (this bit is self-clearing). Any number of bytes of data can be changed before an update registers operation is executed. The update registers operation simultaneously actuates all register changes that have been written to the buffer since any previous update.

Read

If the instruction word is for a read operation, the next N × 8 SCLK cycles clock out the data from the address specified in the instruction word, where N is 1 to 3 as determined by [W1:W0]. If N = 4, the read operation is in streaming mode, continuing until $\overline{CS}$ is raised. Streaming mode does not skip over reserved or blank registers. The readback data is valid on the falling edge of SCLK.

The default mode of the AD9517 serial control port is the bidirectional mode. In bidirectional mode, both the sent data and the readback data appear on the SDIO pin. It is also possible to set the AD9517 to unidirectional mode via the SDO active bit, Register 0x000[0] = 1b. In unidirectional mode, the readback data appears on the SDO pin.

A readback request reads the data that is in the serial control port buffer area, or the data that is in the active registers (see Figure 63). Readback of the buffer or active registers is controlled by Register 0x004[0].

The AD9517 supports only the long instruction mode; therefore, Register 0x000[4:3] must be set to 11b. (This register uses mirrored bits.) Long instruction mode is the default at power-up or reset.

The AD9517 uses Register Address 0x000 to Register Address 0x232.

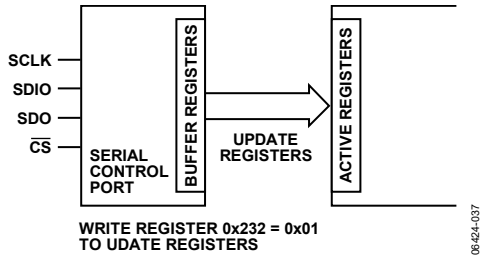

Figure 63. Relationship Between Serial Control Port Buffer Registers and Active Registers of the AD9517

THE INSTRUCTION WORD (16 BITS)

The MSB of the instruction word is R/$\overline{W}$, which indicates whether the instruction is a read or a write. The next two bits, [W1:W0], indicate the length of the transfer in bytes. The final 13 bits are the address ([A12:A0]) at which to begin the read or write operation.

For a write, the instruction word is followed by the number of bytes of data indicated by Bits[W1:W0] (see Table 47).

Table 47. Byte Transfer Count

W1	W0	Bytes to Transfer
0	0	1
0	1	2
1	0	3
1	1	Streaming mode

The 13 bits found in [A12:A0] select the address within the register map that is written to or read from during the data transfer portion of the communications cycle. Only Bits[A9:A0] are needed to cover the range of the 0x232 registers used by the AD9517. Bits[A12:A10] must always be set to 0b. For multibyte transfers, this address is the starting byte address. In MSB first mode, subsequent bytes decrement the address.

MSB/LSB FIRST TRANSFERS

The AD9517 instruction word and byte data can be MSB first or LSB first. Any data written to Register 0x000 must be mirrored; the upper four bits (Bits[7:4]) with the lower four bits (Bits[3:0). This makes it irrelevant whether LSB first or MSB first is in effect. As an example of this mirroring, see the default setting for this register: 0x18, which mirrors Bit 4 and Bit 3. This sets the long instruction mode (which is the default and the only mode that is supported).

The default for the AD9517 is MSB first.

When LSB first is set by Register 0x000[1] and Register 0x000[6], it takes effect immediately because it affects only the operation of the serial control port and does not require that an update be executed.

When MSB first mode is active, the instruction and data bytes must be written from MSB to LSB. Multibyte data transfers in MSB first format start with an instruction byte that includes the register address of the most significant data byte. Subsequent data bytes must follow in order from the high address to the low address. In MSB first mode, the serial control port internal address generator decrements for each data byte of the multibyte transfer cycle.

When LSB first is active, the instruction and data bytes must be written from LSB to MSB. Multibyte data transfers in LSB first format start with an instruction byte that includes the register address of the least significant data byte followed by multiple data bytes. The internal byte address generator of the serial control port increments for each byte of the multibyte transfer cycle.

The AD9517 serial control port register address decrements from the register address just written toward 0x000 for multibyte I/O operations if the MSB first mode is active (default). If the LSB first mode is active, the register address of the serial control port increments from the address just written toward Address 0x232 for multibyte I/O operations.

Streaming mode always terminates when it hits Address 0x232. Note that unused addresses are not skipped during multibyte I/O operations.

Table 48. Streaming Mode (No Addresses Are Skipped)

Write Mode	Address Direction	Stop Sequence
LSB first	Increment	0x230, 0x231, 0x232, stop
MSB first	Decrement	0x001, 0x000, 0x232, stop

Table 49. Serial Control Port, 16-Bit Instruction Word, MSB First

MSB															LSB
I15	I14	I13	I12	I11	I10	I9	I8	I7	I6	I5	I4	I3	I2	I1	I0
R/$\overline{W}$	W1	W0	A12 = 0	A11 = 0	A10 = 0	A9	A8	A7	A6	A5	A4	A3	A2	A1	A0

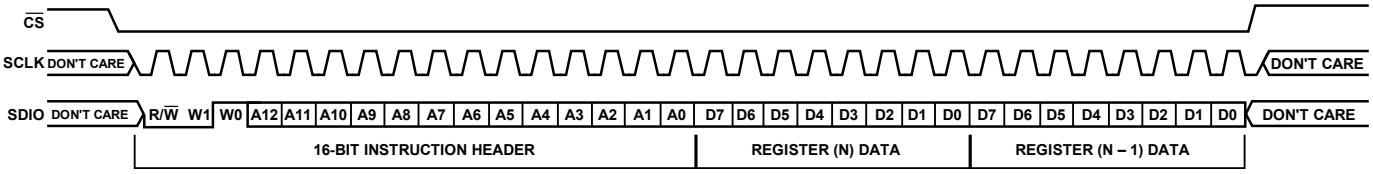

Figure 64. Serial Control Port Write—MSB First, 16-Bit Instruction, Two Bytes Data

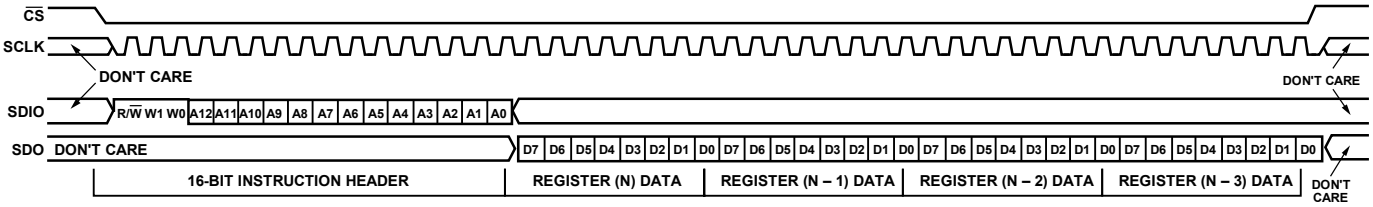

Figure 65. Serial Control Port Read—MSB First, 16-Bit Instruction, Four Bytes Data

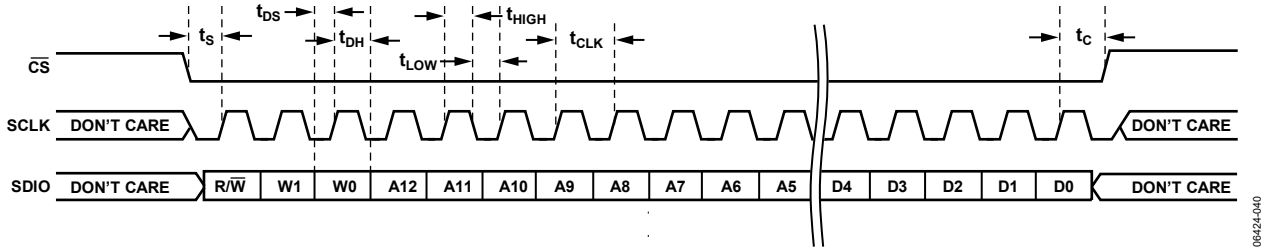

Figure 66. Serial Control Port Write—MSB First, 16-Bit Instruction, Timing Measurements

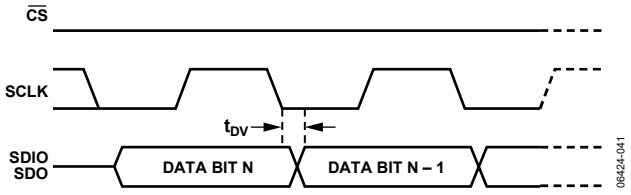

Figure 67. Timing Diagram for Serial Control Port Register Read

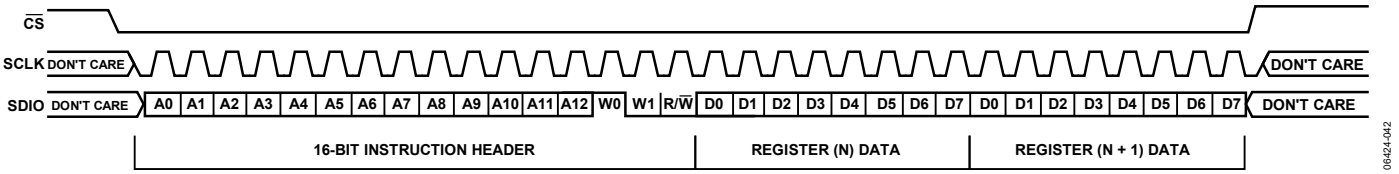

Figure 68. Serial Control Port Write—LSB First, 16-Bit Instruction, Two Bytes Data

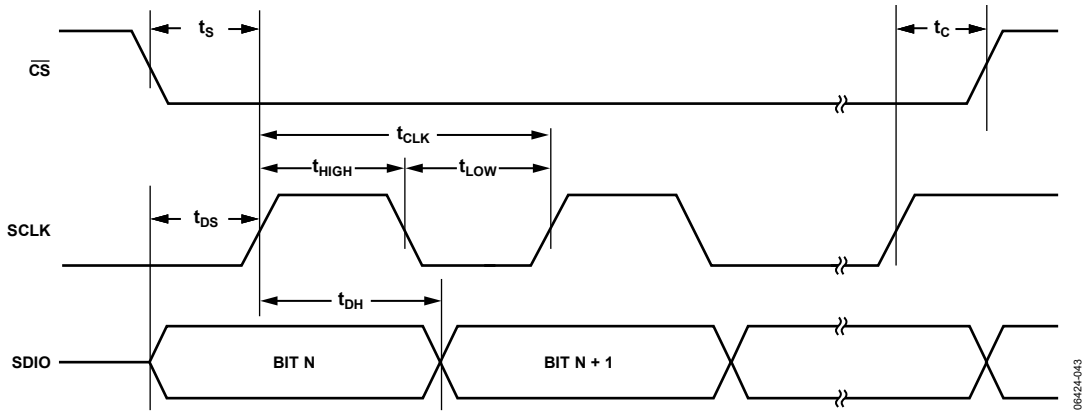

Figure 69. Serial Control Port Timing—Write

Table 50. Serial Control Port Timing

Parameter	Description
t_{DS}	Setup time between data and rising edge of SCLK
t_{DH}	Hold time between data and rising edge of SCLK
t_{CLK}	Period of the clock
t_S	Setup time between $\overline{CS}$ falling edge and SCLK rising edge (start of communication cycle)
t_C	Setup time between SCLK rising edge and $\overline{CS}$ rising edge (end of communication cycle)
t_{HIGH}	Minimum period that SCLK should be in a logic high state
t_{LOW}	Minimum period that SCLK should be in a logic low state
t_{DV}	SCLK to valid SDIO and SDO (see Figure 67)

THERMAL PERFORMANCE

Table 51. Thermal Parameters for the 48-Lead LFCSP

Symbol	Thermal Characteristic Using a JEDEC JESD51-7 Plus JEDEC JESD51-5 2S2P Test Board	Value (°C/W)
θ_{JA}	Junction-to-ambient thermal resistance, natural convection per JEDEC JESD51-2 (still air)	24.7
θ_{JMA}	Junction-to-ambient thermal resistance, 1.0 m/sec airflow per JEDEC JESD51-6 (moving air)	21.6
θ_{JMA}	Junction-to-ambient thermal resistance, 2.5 m/sec airflow per JEDEC JESD51-6 (moving air)	19.4
θ_{JB}	Junction-to-board thermal resistance, natural convection per JEDEC JESD51-8 (still air)	12.9
Ψ_{JB}	Junction-to-board characterization parameter, natural convection per JEDEC JESD51-6 (still air) and JEDEC JESD51-8	11.9
Ψ_{JB}	Junction-to-board characterization parameter, 1.0 m/sec airflow per JEDEC JESD51-6 (moving air) and JEDEC JESD51-8	11.8
Ψ_{JB}	Junction-to-board characterization parameter, 2.5 m/sec airflow per JEDEC JESD51-6 (moving air) and JEDEC JESD51-8	11.6
θ_{JC}	Junction-to-case thermal resistance (die-to-heat sink) per MIL-STD-883, Method 1012.1	1.3
Ψ_{JT}	Junction-to-top-of-package characterization parameter, natural convection per JEDEC JESD51-2 (still air)	0.1
Ψ_{JT}	Junction-to-top-of-package characterization parameter, 1.0 m/sec airflow per JEDEC JESD51-2 (still air)	0.2
Ψ_{JT}	Junction-to-top-of-package characterization parameter, 2.0 m/sec airflow per JEDEC JESD51-2 (still air)	0.3

Use the following equation to determine the junction temperature of the AD9517 on the application PCB:

$$T_J = T_{CASE} + (\Psi_{JT} \times PD)$$

where:

T_J is the junction temperature (°C).

T_{CASE} is the case temperature (°C) measured by the user at the top center of the package.

Ψ_{JT} is the value from Table 51.

PD is the power dissipation of the device (see Table 17).

Values of θ_{JA} are provided for package comparison and PCB design considerations. θ_{JA} can be used for a first-order approximation of T_J by the following equation:

$$T_J = T_A + (\theta_{JA} \times PD)$$

where T_A is the ambient temperature (°C).

Values of θ_{JC} are provided for package comparison and PCB design considerations when an external heat sink is required.

Values of Ψ_{JB} are provided for package comparison and PCB design considerations.

CONTROL REGISTERS

CONTROL REGISTER MAP OVERVIEW

Table 52. Control Register Map Overview

Reg. Addr. (Hex)	Parameter	Bit 7 (MSB)	Bit 6	Bit 5	Bit 4	Bit 3	Bit 2	Bit 1	Bit 0 (LSB)	Default Value (Hex)
Serial Port Configuration										
0x000	Serial port configuration	SDO active	LSB first	Soft reset	Long instruction	Long instruction	Soft reset	LSB first	SDO active	0x18
0x001	Blank									
0x002	Reserved									
0x003	Part ID	Part ID (read only)								0x11
0x004	Readback control	Blank							Read back active registers	0x00
PLL										
0x010	PFD and charge pump	PFD polarity	Charge pump current			Charge pump mode		PLL power-down		0x7D
0x011	R counter	14-bit R divider, Bits[7:0] (LSB)								0x01
0x012		Blank		14-bit R divider, Bits[13:8] (MSB)						0x00
0x013	A counter	Blank		6-bit A counter						0x00
0x014	B counter	13-bit B counter, Bits[7:0] (LSB)								0x03
0x015		Blank			13-bit B counter, Bits[12:8] (MSB)					0x00
0x016	PLL Control 1	Set CP pin to $V_{CP}/2$	Reset R counter	Reset A and B counters	Reset all counters	B counter bypass	Prescaler P			0x06
0x017	PLL Control 2	STATUS pin control						Antibacklash pulse width		0x00
0x018	PLL Control 3	Reserved	Lock detect counter		Digital lock detect window	Disable digital lock detect	VCO calibration divider		VCO cal now	0x06
0x019	PLL Control 4	R, A, B counters $\overline{\text{SYNC}}$ pin reset		R path delay			N path delay			0x00
0x01A	PLL Control 5	Reserved	Reference frequency monitor threshold	LD pin control						0x00
0x01B	PLL Control 6	VCO frequency monitor	REF2 ($\overline{\text{REFIN}}$) frequency monitor	REF1 (REFIN) frequency monitor	REFMON pin control					0x00
0x01C	PLL Control 7	Disable switchover deglitch	Select REF2	Use REF_SEL pin	Reserved		REF2 power-on	REF1 power-on	Differential reference	0x00
0x01D	PLL Control 8	Reserved			PLL status register disable	LD pin comparator enable	Holdover enable	External holdover control	Holdover enable	0x00
0x01E	PLL Control 9	Reserved								0x00
0x01F	PLL readback	Reserved	VCO cal finished	Holdover active	REF2 selected	VCO frequency > threshold	REF2 frequency > threshold	REF1 frequency > threshold	Digital lock detect	N/A
0x020 to 0x04F	Blank									

Reg. Addr. (Hex)	Parameter	Bit 7 (MSB)	Bit 6	Bit 5	Bit 4	Bit 3	Bit 2	Bit 1	Bit 0 (LSB)	Default Value (Hex)
Fine Delay Adjust—OUT4 to OUT7										
0x0A0	OUT4 delay bypass	Blank							OUT4 delay bypass	0x01
0x0A1	OUT4 delay full-scale	Blank		OUT4 ramp capacitors			OUT4 ramp current			0x00
0x0A2	OUT4 delay fraction	Blank		OUT4 delay fraction						0x00
0x0A3	OUT5 delay bypass	Blank							OUT5 delay bypass	0x01
0x0A4	OUT5 delay full-scale	Blank		OUT5 ramp capacitors			OUT5 ramp current			0x00
0x0A5	OUT5 delay fraction	Blank		OUT5 delay fraction						0x00
0x0A6	OUT6 delay bypass	Blank							OUT6 delay bypass	0x01
0x0A7	OUT6 delay full-scale	Blank		OUT6 ramp capacitors			OUT6 ramp current			0x00
0x0A8	OUT6 delay fraction	Blank		OUT6 delay fraction						0x00
0x0A9	OUT7 delay bypass	Blank							OUT7 delay bypass	0x01
0x0AA	OUT7 delay full-scale	Blank		OUT7 ramp capacitors			OUT7 ramp current			0x00
0x0AB	OUT7 delay fraction	Blank		OUT7 delay fraction						0x00
0x0AC to 0x0EF	Blank									
LVPECL Outputs										
0x0F0	OUT0	Blank			OUT0 invert	OUT0 LVPECL differential voltage		OUT0 power-down		0x08
0x0F1	OUT1	Blank			OUT1 invert	OUT1 LVPECL differential voltage		OUT1 power-down		0x0A
0x0F2, 0x0F3	Reserved									
0x0F4	OUT2	Blank			OUT2 invert	OUT2 LVPECL differential voltage		OUT2 power-down		0x08
0x0F5	OUT3	Blank			OUT3 invert	OUT3 LVPECL differential voltage		OUT3 power-down		0x0A
0x0F6 to 0x13F	Blank									
LVDS/CMOS Outputs										
0x140	OUT4	OUT4 CMOS output polarity		OUT4 LVDS/ CMOS output polarity	OUT4 CMOS B	OUT4 select LVDS/CMOS	OUT4 LVDS output current		OUT4 power-down	0x42
0x141	OUT5	OUT5 CMOS output polarity		OUT5 LVDS/ CMOS output polarity	OUT5 CMOS B	OUT5 select LVDS/CMOS	OUT5 LVDS output current		OUT5 power-down	0x43
0x142	OUT6	OUT6 CMOS output polarity		OUT6 LVDS/ CMOS output polarity	OUT6 CMOS B	OUT6 select LVDS/CMOS	OUT6 LVDS output current		OUT6 power-down	0x42
0x143	OUT7	OUT7 CMOS output polarity		OUT7 LVDS/ CMOS output polarity	OUT7 CMOS B	OUT7 select LVDS/CMOS	OUT7 LVDS output current		OUT7 power-down	0x43
0x144 to 0x18F	Blank									

Reg. Addr. (Hex)	Parameter	Bit 7 (MSB)	Bit 6	Bit 5	Bit 4	Bit 3	Bit 2	Bit 1	Bit 0 (LSB)	Default Value (Hex)
LVPECL Channel Dividers										
0x190	Divider 0 (PECL)	Divider 0 low cycles				Divider 0 high cycles				0x00
0x191		Divider 0 bypass	Divider 0 nosync	Divider 0 force high	Divider 0 start high	Divider 0 phase offset				0x80
0x192		Blank		Reserved				Divider 0 direct to output	Divider 0 DCCOFF	0x00
0x193 to 0x195	Reserved									
0x196	Divider1 (PECL)	Divider 1 low cycles				Divider 1 high cycles				0x00
0x197		Divider 1 bypass	Divider 1 nosync	Divider 1 force high	Divider 1 start high	Divider 1 phase offset				0x00
0x198		Blank		Reserved				Divider 1 direct to output	Divider 1 DCCOFF	0x00
LVDS/CMOS Channel Dividers										
0x199	Divider 2 (LVDS/CMOS)	Low Cycles Divider 2.1				High Cycles Divider 2.1				0x22
0x19A		Phase Offset Divider 2.2				Phase Offset Divider 2.1				0x00
0x19B		Low Cycles Divider 2.2				High Cycles Divider 2.2				0x11
0x19C		Reserved		Bypass Divider 2.2	Bypass Divider 2.1	Divider 2 nosync	Divider 2 force high	Start High Divider 2.2	Start High Divider 2.1	0x00
0x19D		Blank		Reserved					Divider 2 DCCOFF	0x00
0x19E	Divider 3 (LVDS/CMOS)	Low Cycles Divider 3.1				High Cycles Divider 3.1				0x22
0x19F		Phase Offset Divider 3.2				Phase Offset Divider 3.1				0x00
0x1A0		Low Cycles Divider 3.2				High Cycles Divider 3.2				0x11
0x1A1		Reserved		Bypass Divider 3.2	Bypass Divider 3.1	Divider 3 nosync	Divider 3 force high	Start High Divider 3.2	Start High Divider 3.1	0x00
0x1A2		Blank		Reserved					Divider 3 DCCOFF	0x00
0x1A3	Reserved									
0x1A4 to 0x1DF	Blank									
VCO Divider and CLK Input										
0x1E0	VCO divider	Blank				Reserved	VCO Divider			0x02
0x1E1	Input CLKs	Reserved			Power down clock input section	Power down VCO clock interface	Power down VCO and CLK	Select VCO or CLK	Bypass VCO divider	0x00
0x1E2 to 0x22A	Blank									
System										
0x230	Power down and sync	Reserved					Power down sync	Power down distribution reference	Soft sync	0x00
0x231		Blank				Reserved				0x00
Update All Registers										
0x232	Update all registers	Blank							Update all registers (self-clearing bit)	0x00

CONTROL REGISTER MAP DESCRIPTIONS

Table 53 through Table 62 provide a detailed description of each of the control register functions. The registers are listed by hexadecimal address. A range of bits (for example, from Bit 5 through Bit 2) is indicated using a colon and brackets, as follows: [5:2].

Table 53. Serial Port Configuration and Part ID

Reg. Addr (Hex)	Bits	Name	Description
0x000	[7:4]	Mirrored, Bits[3:0]	Bits[7:4] should always mirror Bits[3:0] so that it does not matter whether the part is in MSB or LSB first mode (see Bit 1, Register 0x000). The user should set the bits as follows: Bit 7 = Bit 0. Bit 6 = Bit 1. Bit 5 = Bit 2. Bit 4 = Bit 3.
	3	Long instruction	Short/long instruction mode. This part uses long instruction mode only, so this bit should always be set to 1b. 0: 8-bit instruction (short). 1: 16-bit instruction (long) (default).
	2	Soft reset	Soft reset. 1: soft reset; restores default values to internal registers. Not self-clearing. Must be cleared to 0b to complete reset operation.
	1	LSB first	MSB or LSB data orientation. 0: data-oriented MSB first; addressing decrements (default). 1: data-oriented LSB first; addressing increments.
	0	SDO active	Selects unidirectional or bidirectional data transfer mode. 0: SDIO pin used for write and read; SDO set to high impedance; bidirectional mode (default). 1: SDO used for read, SDIO used for write; unidirectional mode.
0x003	[7:0]	Part ID (read only)	Uniquely identifies the dash version (-0 through -4) of the AD9517 AD9517-0: 0x11 AD9517-1: 0x51 AD9517-2: 0x91 AD9517-3: 0x53 AD9517-4: 0xD3
0x004	0	Read back active registers	Selects register bank used for a readback. 0: reads back buffer registers (default). 1: reads back active registers.

Table 54. PLL

Reg. Addr. (Hex)	Bits	Name	Description
0x010	7	PFD polarity	Sets the PFD polarity. Negative polarity is for use (if needed) with external VCO/VCXO only. The on-chip VCO requires positive polarity; Bit 7 = 0b. 0: positive; higher control voltage produces higher frequency (default). 1: negative; higher control voltage produces lower frequency.
	[6:4]	CP current	Charge pump current (with CPRSET = 5.1 kΩ).
			6 | 5 | 4 | I_{CP} (mA)
			0 | 0 | 0 | 0.6
			0 | 0 | 1 | 1.2
			0 | 1 | 0 | 1.8
			0 | 1 | 1 | 2.4
			1 | 0 | 0 | 3.0
			1 | 0 | 1 | 3.6
			1 | 1 | 0 | 4.2
			1 | 1 | 1 | 4.8 (default)
	[3:2]	CP mode	Charge pump operating mode.
			3 | 2 | Charge Pump Mode
			0 | 0 | High impedance state.
			0 | 1 | Force source current (pump up).
			1 | 0 | Force sink current (pump down).
			1 | 1 | Normal operation (default).
	[1:0]	PLL power-down	PLL operating mode.
			1 | 0 | Mode
			0 | 0 | Normal operation.
			0 | 1 | Asynchronous power-down (default).
			1 | 0 | Normal operation.
			1 | 1 | Synchronous power-down.
0x011	[7:0]	14-bit R divider, Bits[7:0] (LSB)	R divider LSBs—lower eight bits (default = 0x01).
0x012	[5:0]	14-bit R divider, Bits[13:8] (MSB)	R divider MSBs—upper six bits (default = 0x00).
0x013	[5:0]	6-bit A counter	A counter (part of N divider) (default = 0x00).
0x014	[7:0]	13-bit B counter, Bits[7:0] (LSB)	B counter (part of N divider)—lower eight bits (default = 0x03).
0x015	[4:0]	13-bit B counter, Bits[12:8] (MSB)	B counter (part of N divider)—upper five bits (default = 0x00).
0x016	7	Set CP pin to $V_{CP}/2$	Sets the CP pin to one-half of the V_{CP} supply voltage. 0: CP normal operation (default). 1: CP pin set to $V_{CP}/2$.
	6	Reset R counter	Resets R counter (R divider). 0: normal (default). 1: holds the R counter in reset.
	5	Reset A, B counters	Resets A and B counters (part of N divider). 0: normal (default). 1: holds the A and B counters in reset.
	4	Reset all counters	Resets R, A, and B counters. 0: normal (default). 1: holds the R, A, and B counters in reset.
	3	B counter bypass	B counter bypass. This is valid only when operating the prescaler in FD mode. 0: normal (default). 1: B counter is set to divide-by-1. This allows the prescaler setting to determine the divide for the N divider.

Reg. Addr. (Hex)	Bits	Name	Description
0x016	[2:0]	Prescaler P	Prescaler: DM = dual modulus and FD = fixed divide.

2	1	0	Mode	Prescaler
0	0	0	FD	Divide-by-1.
0	0	1	FD	Divide-by-2.
0	1	0	DM	Divide-by-2 (2/3 mode).
0	1	1	DM	Divide-by-4 (4/5 mode).
1	0	0	DM	Divide-by-8 (8/9 mode).
1	0	1	DM	Divide-by-16 (16/17 mode).
1	1	0	DM	Divide-by-32 (32/33 mode) (default).
1	1	1	FD	Divide-by-3.

0x017 [7:2] STATUS pin control — Selects the signal that is connected to the STATUS pin.

7	6	5	4	3	2	Level or Dynamic Signal	Signal at STATUS Pin
0	0	0	0	0	0	LVL	Ground (dc) (default).
0	0	0	0	0	1	DYN	N divider output (after the delay).
0	0	0	0	1	0	DYN	R divider output (after the delay).
0	0	0	0	1	1	DYN	A divider output.
0	0	0	1	0	0	DYN	Prescaler output.
0	0	0	1	0	1	DYN	PFD up pulse.
0	0	0	1	1	0	DYN	PFD down pulse.
0	X	X	X	X	X	LVL	Ground (dc); for all other cases of 0XXXXXb not specified above.
							The selections that follow are the same as REFMON.
1	0	0	0	0	0	LVL	Ground (dc).
1	0	0	0	0	1	DYN	REF1 clock (differential reference when in differential mode).
1	0	0	0	1	0	DYN	REF2 clock (not available in differential mode).
1	0	0	0	1	1	DYN	Selected reference to PLL (differential reference when in differential mode).
1	0	0	1	0	0	DYN	Unselected reference to PLL (not available in differential mode).
1	0	0	1	0	1	LVL	Status of selected reference (status of differential reference); active high.
1	0	0	1	1	0	LVL	Status of unselected reference (not available in differential mode); active high.
1	0	0	1	1	1	LVL	Status REF1 frequency (active high).
1	0	1	0	0	0	LVL	Status REF2 frequency (active high).
1	0	1	0	0	1	LVL	(Status REF1 frequency) AND (status REF2 frequency).
1	0	1	0	1	0	LVL	(DLD) AND (status of selected reference) AND (status of VCO).
1	0	1	0	1	1	LVL	Status of VCO frequency (active high).
1	0	1	1	0	0	LVL	Selected reference (low = REF1, high = REF2).
1	0	1	1	0	1	LVL	Digital lock detect (DLD); active high.
1	0	1	1	1	0	LVL	Holdover active (active high).
1	0	1	1	1	1	LVL	LD pin comparator output (active high).
1	1	0	0	0	0	LVL	V_S (PLL supply).
1	1	0	0	0	1	DYN	$\overline{\text{REF1 clock}}$ (differential reference when in differential mode).
1	1	0	0	1	0	DYN	$\overline{\text{REF2 clock}}$ (not available in differential mode).
1	1	0	0	1	1	DYN	$\overline{\text{Selected reference to PLL}}$ (differential reference when in differential mode).
1	1	0	1	0	0	DYN	$\overline{\text{Unselected reference to PLL}}$ (not available when in differential mode).
1	1	0	1	0	1	LVL	Status of selected reference (status of differential reference); active low.
1	1	0	1	1	0	LVL	Status of unselected reference (not available in differential mode); active low.
1	1	0	1	1	1	LVL	Status of REF1 frequency (active low).
1	1	1	0	0	0	LVL	Status of REF2 frequency (active low).
1	1	1	0	0	1	LVL	$\overline{\text{(Status of REF1 frequency) AND (status of REF2 frequency)}}$.
1	1	1	0	1	0	LVL	$\overline{\text{(DLD) AND (status of selected reference) AND (status of VCO)}}$.
1	1	1	0	1	1	LVL	Status of VCO frequency (active low).
1	1	1	1	0	0	LVL	Selected reference (low = REF2, high = REF1).
1	1	1	1	0	1	LVL	Digital lock detect (DLD) (active low).
1	1	1	1	1	0	LVL	Holdover active (active low).
1	1	1	1	1	1	LVL	LD pin comparator output (active low).

Reg. Addr. (Hex)	Bits	Name	Description		
0x017	[1:0]	Antibacklash pulse width	**1**	**0**	**Antibacklash Pulse Width (ns)**
			0	0	2.9 (default). This is the recommended setting; it does not normally need to be changed.
			0	1	1.3. This setting may be necessary if the PFD frequency > 50 MHz.
			1	0	6.0.
			1	1	2.9.
0x018	[6:5]	Lock detect counter	Required consecutive number of PFD cycles with edges inside lock detect window before the DLD indicates a locked condition.		
			6	**5**	**PFD Cycles to Determine Lock**
			0	0	5 (default).
			0	1	16.
			1	0	64.
			1	1	255.
	4	Digital lock detect window	If the time difference of the rising edges at the inputs to the PFD is less than the lock detect window time, the digital lock detect flag is set. The flag remains set until the time difference is greater than the loss-of-lock threshold. 0: high range (default). 1: low range.		
	3	Disable digital lock detect	Digital lock detect operation. 0: normal lock detect operation (default). 1: disables lock detect.		
	[2:1]	VCO cal divider	VCO calibration divider. Divider used to generate the VCO calibration clock from the PLL reference clock.		
			2	**1**	**VCO Calibration Clock Divider**
			0	0	2. This setting is fine for PFD frequencies < 12.5 MHz. The PFD frequency is f_{REF}/R.
			0	1	4. This setting is fine for PFD frequencies < 25 MHz.
			1	0	8. This setting is fine for PFD frequencies < 50 MHz.
			1	1	16 (default). This setting is fine for any PFD frequency but also results in the longest VCO calibration time.
	0	VCO cal now	Bit used to initiate the VCO calibration. This bit must be toggled from 0b to 1b in the active registers. To initiate calibration, use the following three steps: first, ensure that the input reference signal is present; second, set to 0b (if not zero already), followed by an update bit (Register 0x232, Bit 0); and third, program to 1b, followed by another update bit (Register 0x232, Bit 0). Clearing this bit discards the VCO calibration and usually results in the PLL losing lock. The user must ensure that the holdover enable bits in Register 0x01D = 00b during VCO calibration.		
0x019	[7:6]	R, A, B counters $\overline{\text{SYNC}}$ pin reset	**7**	**6**	**Action**
			0	0	Does nothing on $\overline{\text{SYNC}}$ (default).
			0	1	Asynchronous reset.
			1	0	Synchronous reset.
			1	1	Does nothing on $\overline{\text{SYNC}}$.
	[5:3]	R path delay	R path delay (default = 0x00) (see Table 2).		
	[2:0]	N path delay	N path delay (default = 0x00) (see Table 2).		

Reg. Addr. (Hex)	Bits	Name	Description							
0x01A	6	Reference frequency monitor threshold	Sets the reference (REF1/REF2) frequency monitor's detection threshold frequency. This does not affect the VCO frequency monitor's detection threshold (see Table 16: REF1, REF2, and VCO frequency status monitor parameter). 0: frequency valid if frequency is above the higher frequency threshold (default). 1: frequency valid if frequency is above the lower frequency threshold.							
	[5:0]	LD pin control	Selects the signal that is connected to the LD pin.							
			5	**4**	**3**	**2**	**1**	**0**	**Level or Dynamic Signal**	**Signal at LD Pin**
			0	0	0	0	0	0	LVL	Digital lock detect (high = lock, low = unlock) (default).
			0	0	0	0	0	1	DYN	P-channel, open-drain lock detect (analog lock detect).
			0	0	0	0	1	0	DYN	N-channel, open-drain lock detect (analog lock detect).
			0	0	0	0	1	1	HIZ	High-Z LD pin.
			0	0	0	1	0	0	CUR	Current source lock detect (110 µA when DLD is true).
			0	X	X	X	X	X	LVL	Ground (dc); for all other cases of 0XXXXXb not specified above.
										The selections that follow are the same as REFMON.
			1	0	0	0	0	0	LVL	Ground (dc).
			1	0	0	0	0	1	DYN	REF1 clock (differential reference when in differential mode).
			1	0	0	0	1	0	DYN	REF2 clock (not available in differential mode).
			1	0	0	0	1	1	DYN	Selected reference to PLL (differential reference when indifferential mode).
			1	0	0	1	0	0	DYN	Unselected reference to PLL (not available in differential mode).
			1	0	0	1	0	1	LVL	Status of selected reference (status of differential reference); active high.
			1	0	0	1	1	0	LVL	Status of unselected reference (not available in differential mode); active high.
			1	0	0	1	1	1	LVL	Status REF1 frequency (active high).
			1	0	1	0	0	0	LVL	Status REF2 frequency (active high).
			1	0	1	0	0	1	LVL	(Status REF1 frequency) AND (status REF2 frequency).
			1	0	1	0	1	0	LVL	(DLD) AND (status of selected reference) AND (status of VCO).
			1	0	1	0	1	1	LVL	Status of VCO frequency (active high).
			1	0	1	1	0	0	LVL	Selected reference (low = REF1, high = REF2).
			1	0	1	1	0	1	LVL	Digital lock detect (DLD); active high.
			1	0	1	1	1	0	LVL	Holdover active (active high).
			1	0	1	1	1	1	LVL	Not available. Do not use.
			1	1	0	0	0	0	LVL	V_S (PLL supply).
			1	1	0	0	0	1	DYN	$\overline{\text{REF1 clock}}$ (differential reference when in differential mode).
			1	1	0	0	1	0	DYN	$\overline{\text{REF2 clock}}$ (not available in differential mode).
			1	1	0	0	1	1	DYN	$\overline{\text{Selected reference to PLL}}$ (differential reference when in differential mode).
			1	1	0	1	0	0	DYN	$\overline{\text{Unselected reference to PLL}}$ (not available when in differential mode).
			1	1	0	1	0	1	LVL	Status of selected reference (status of differential reference); active low.
			1	1	0	1	1	0	LVL	Status of unselected reference (not available in differential mode); active low.
			1	1	0	1	1	1	LVL	Status of REF1 frequency (active low).
			1	1	1	0	0	0	LVL	Status of REF2 frequency (active low).
			1	1	1	0	0	1	LVL	$\overline{\text{(Status of REF1 frequency) AND (status of REF2 frequency)}}$.
			1	1	1	0	1	0	LVL	$\overline{\text{(DLD) AND (status of selected reference) AND (status of VCO)}}$.
			1	1	1	0	1	1	LVL	Status of VCO frequency (active low).
			1	1	1	1	0	0	LVL	Selected reference (low = REF2, high = REF1).
			1	1	1	1	0	1	LVL	Digital lock detect (DLD); active low.
			1	1	1	1	1	0	LVL	Holdover active (active low).
			1	1	1	1	1	1	LVL	Not available. Do not use.

Reg. Addr. (Hex)	Bits	Name	Description
0x01B	7	VCO frequency monitor	Enables or disables VCO frequency monitor. 0: disables VCO frequency monitor (default). 1: enables VCO frequency monitor.
	6	REF2 ($\overline{\text{REFIN}}$) frequency monitor	Enables or disables REF2 frequency monitor. 0: disables REF2 frequency monitor (default). 1: enables REF2 frequency monitor.
	5	REF1 (REFIN) frequency monitor	REF1 (REFIN) frequency monitor enable; this is for both REF1 (single-ended) and REFIN (differential) inputs (as selected by differential reference mode). 0: disables REF1 (REFIN) frequency monitor (default). 1: enables REF1 (REFIN) frequency monitor.
	[4:0]	REFMON pin control	Selects the signal that is connected to the REFMON pin.

4	3	2	1	0	Level or Dynamic Signal	Signal at REFMON Pin
0	0	0	0	0	LVL	Ground (dc) (default).
0	0	0	0	1	DYN	REF1 clock (differential reference when in differential mode).
0	0	0	1	0	DYN	REF2 clock (not available in differential mode).
0	0	0	1	1	DYN	Selected reference to PLL (differential reference when in differential mode).
0	0	1	0	0	DYN	Unselected reference to PLL (not available in differential mode).
0	0	1	0	1	LVL	Status of selected reference (status of differential reference); active high.
0	0	1	1	0	LVL	Status of unselected reference (not available in differential mode); active high.
0	0	1	1	1	LVL	Status REF1 frequency (active high).
0	1	0	0	0	LVL	Status REF2 frequency (active high).
0	1	0	0	1	LVL	(Status REF1 frequency) AND (status REF2 frequency).
0	1	0	1	0	LVL	(DLD) AND (status of selected reference) AND (status of VCO).
0	1	0	1	1	LVL	Status of VCO frequency (active high).
0	1	1	0	0	LVL	Selected reference (low = REF1, high = REF2).
0	1	1	0	1	LVL	Digital lock detect (DLD); active low.
0	1	1	1	0	LVL	Holdover active (active high).
0	1	1	1	1	LVL	LD pin comparator output (active high).
1	0	0	0	0	LVL	V_S (PLL supply).
1	0	0	0	1	DYN	$\overline{\text{REF1 clock}}$ (differential reference when in differential mode).
1	0	0	1	0	DYN	$\overline{\text{REF2 clock}}$ (not available in differential mode).
1	0	0	1	1	DYN	$\overline{\text{Selected reference to PLL}}$ (differential reference when in differential mode).
1	0	1	0	0	DYN	$\overline{\text{Unselected reference to PLL}}$ (not available in differential mode).
1	0	1	0	1	LVL	Status of selected reference (status of differential reference); active low.
1	0	1	1	0	LVL	Status of unselected reference (not available in differential mode); active low.
1	0	1	1	1	LVL	Status of REF1 frequency (active low).
1	1	0	0	0	LVL	Status of REF2 frequency (active low).
1	1	0	0	1	LVL	$\overline{\text{(Status of REF1 frequency) AND (Status of REF2 frequency)}}$.
1	1	0	1	0	LVL	$\overline{\text{(DLD) AND (Status of selected reference) AND (Status of VCO)}}$.
1	1	0	1	1	LVL	Status of VCO frequency (active low).
1	1	1	0	0	LVL	Selected reference (low = REF2, high = REF1).
1	1	1	0	1	LVL	Digital lock detect (DLD); active low.
1	1	1	1	0	LVL	Holdover active (active low).
1	1	1	1	1	LVL	LD pin comparator output (active low).

0x01C	7	Disable switchover deglitch	Disables or enables the switchover deglitch circuit. 0: enables switchover deglitch circuit (default). 1: disables switchover deglitch circuit.
	6	Select REF2	If Register 0x01C, Bit 5 = 0b, selects reference for PLL. 0: selects REF1 (default). 1: selects REF2.
	5	Use REF_SEL pin	Sets method of PLL reference selection. 0: uses Register 0x01C, Bit 6 (default). 1: uses REF_SEL pin.
	[4:3]	Reserved	Reserved (default: 00b).

Reg. Addr. (Hex)	Bits	Name	Description
0x01C	2	REF2 power-on	This bit turns the REF2 power on. 0: REF2 power off (default). 1: REF2 power on.
	1	REF1 power-on	This bit turns the REF1 power on. 0: REF1 power off (default). 1: REF1 power on.
	0	Differential reference	Selects the PLL reference mode, differential or single-ended. Single-ended must be selected for the automatic switchover between REF1 and REF2 to work. 0: single-ended reference mode (default). 1: differential reference mode.
0x01D	4	PLL status register disable	Disables the PLL status register readback. 0: PLL status register enable (default). 1: PLL status register disable.
	3	LD pin comparator enable	Enables the LD pin voltage comparator. This function is used with the LD pin current source lock detect mode. When in the internal (automatic) holdover mode, this function enables the use of the voltage on the LD pin to determine if the PLL was previously in a locked state (see Figure 53). Otherwise, this function can be used with the REFMON and STATUS pins to monitor the voltage on this pin. 0: disables LD pin comparator; internal/automatic holdover controller treats this pin as true (high) (default). 1: enables LD pin comparator.
	2	Holdover enable	Along with Bit 0, enables the holdover function. Automatic holdover must be disabled during VCO calibration. 0: holdover disabled (default). 1: holdover enabled.
	1	External holdover control	Enables the external hold control through the $\overline{\text{SYNC}}$ pin. (This disables the internal holdover mode.) 0: automatic holdover mode—holdover controlled by automatic holdover circuit. (default) 1: external holdover mode—holdover controlled by $\overline{\text{SYNC}}$ pin.
	0	Holdover enable	Along with Bit 2, enables the holdover function. Automatic holdover must be disabled during VCO calibration. 0: holdover disabled (default). 1: holdover enabled.
0x01F	6	VCO cal finished	Read-only register: indicates status of the VCO calibration. 0: VCO calibration not finished. 1: VCO calibration finished.
	5	Holdover active	Read-only register: indicates if the part is in the holdover state (see Figure 53). This is not the same as holdover enabled. 0: not in holdover. 1: holdover state active.
	4	REF2 selected	Read-only register: indicates which PLL reference is selected as the input to the PLL. 0: REF1 selected (or differential reference if in differential mode). 1: REF2 selected.
	3	VCO frequency > threshold	Read-only register: indicates if the VCO frequency is greater than the threshold (see Table 16: REF1, REF2, and VCO frequency status monitor). 0: VCO frequency is less than the threshold. 1: VCO frequency is greater than the threshold.
	2	REF2 frequency > threshold	Read-only register: indicates if the frequency of the signal at REF2 is greater than the threshold frequency set by Register 0x1A, Bit 6. 0: REF2 frequency is less than threshold frequency. 1: REF2 frequency is greater than threshold frequency.
	1	REF1 frequency > threshold	Read-only register: indicates if the frequency of the signal at REF2 is greater than the threshold frequency set by Register 0x01A, Bit 6. 0: REF1 frequency is less than threshold frequency. 1: REF1 frequency is greater than threshold frequency.
	0	Digital lock detect	Read-only register: digital lock detect. 0: PLL is not locked. 1: PLL is locked.

Table 55. Fine Delay Adjust—OUT4 to OUT7

Reg. Addr. (Hex)	Bits	Name	Description
0x0A0	0	OUT4 delay bypass	Bypasses or uses the delay function. 0: uses delay function. 1: bypasses delay function (default).
0x0A1	[5:3]	OUT4 ramp capacitors	Selects the number of ramp capacitors used by the delay function. The combination of the number of the capacitors and the ramp current sets the delay full scale.

5	4	3	Number of Capacitors
0	0	0	4 (default)
0	0	1	3
0	1	0	3
0	1	1	2
1	0	0	3
1	0	1	2
1	1	0	2
1	1	1	1

	[2:0]	OUT4 ramp current	Ramp current for the delay function. The combination of the number of capacitors and the ramp current sets the delay full scale.

2	1	0	Current (µA)
0	0	0	200 (default)
0	0	1	400
0	1	0	600
0	1	1	800
1	0	0	1000
1	0	1	1200
1	1	0	1400
1	1	1	1600

0x0A2	[5:0]	OUT4 delay fraction	Selects the fraction of the full-scale delay desired (6-bit binary). A setting of 000000b gives zero delay. Only delay values up to 47 decimals (101111b; 0x2F) are supported (default = 0x00).
0x0A3	0	OUT5 delay bypass	Bypasses or uses the delay function. 0: uses delay function. 1: bypasses delay function (default).
0x0A4	[5:3]	OUT5 ramp capacitors	Selects the number of ramp capacitors used by the delay function. The combination of the number of the capacitors and the ramp current sets the delay full scale.

5	4	3	Number of Capacitors
0	0	0	4 (default)
0	0	1	3
0	1	0	3
0	1	1	2
1	0	0	3
1	0	1	2
1	1	0	2
1	1	1	1

Reg. Addr. (Hex)	Bits	Name	Description
0x0A4	[2:0]	OUT5 ramp current	Ramp current for the delay function. The combination of the number of capacitors and the ramp current sets the delay full scale.

2	1	0	Current (µA)
0	0	0	200 (default)
0	0	1	400
0	1	0	600
0	1	1	800
1	0	0	1000
1	0	1	1200
1	1	0	1400
1	1	1	1600

0x0A5	[5:0]	OUT5 delay fraction	Selects the fraction of the full-scale delay desired (6-bit binary). A setting of 000000b gives zero delay. Only delay values up to 47 decimals (101111b; 0x2F) are supported (default = 0x00).
0x0A6	0	OUT6 delay bypass	Bypasses or uses the delay function. 0: uses delay function. 1: bypasses delay function (default).
0x0A7	[5:3]	OUT6 ramp capacitors	Selects the number of ramp capacitors used by the delay function. The combination of the number of capacitors and the ramp current sets the delay full scale.

5	4	3	Number of Capacitors
0	0	0	4 (default)
0	0	1	3
0	1	0	3
0	1	1	2
1	0	0	3
1	0	1	2
1	1	0	2
1	1	1	1

	[2:0]	OUT6 ramp current	Ramp current for the delay function. The combination of the number of capacitors and the ramp current sets the delay full scale.

2	1	0	Current (µA)
0	0	0	200 (default)
0	0	1	400
0	1	0	600
0	1	1	800
1	0	0	1000
1	0	1	1200
1	1	0	1400
1	1	1	1600

0x0A8	[5:0]	OUT6 delay fraction	Selects the fraction of the full-scale delay desired (6-bit binary). A setting of 000000b gives zero delay. Only delay values up to 47 decimals (101111b; 0x2F) are supported (default = 0x00).
0x0A9	0	OUT7 delay bypass	Bypasses or uses the delay function. 0: uses delay function. 1: bypasses delay function (default).

Reg. Addr. (Hex)	Bits	Name	Description
0x0AA	[5:3]	OUT7 ramp capacitors	Selects the number of ramp capacitors used by the delay function. The combination of the number of capacitors and the ramp current sets the delay full scale.

5	4	3	Number of Capacitors
0	0	0	4 (default)
0	0	1	3
0	1	0	3
0	1	1	2
1	0	0	3
1	0	1	2
1	1	0	2
1	1	1	1

	[2:0]	OUT7 ramp current	Ramp current for the delay function. The combination of the number of capacitors and the ramp current sets the delay full scale.

2	1	0	Current Value (µA)
0	0	0	200 (default)
0	0	1	400
0	1	0	600
0	1	1	800
1	0	0	1000
1	0	1	1200
1	1	0	1400
1	1	1	1600

0x0AB	[5:0]	OUT7 delay fraction	Selects the fraction of the full-scale delay desired (6-bit binary). A setting of 000000b gives zero delay. Only delay values up to 47 decimals (101111b; 0x2F) are supported (default = 0x00).

Table 56. LVPECL Outputs

Reg. Addr. (Hex)	Bits	Name	Description
0x0F0	4	OUT0 invert	Sets the output polarity. 0: noninverting (default). 1: inverting.
	[3:2]	OUT0 LVPECL differential voltage	Sets the LVPECL output differential voltage (V_{OD}).

3	2	V_{OD} (mV)
0	0	400
0	1	600
1	0	780 (default)
1	1	960

	[1:0]	OUT0 power-down	LVPECL power-down modes.

1	0	Mode	Output
0	0	Normal operation (default).	On
0	1	Partial power-down, reference on; use only if there are no external load resistors.	Off
1	0	Partial power-down, reference on, safe LVPECL power-down.	Off
1	1	Total power-down, reference off; use only if there are no external load resistors.	Off

Reg. Addr. (Hex)	Bits	Name	Description			
0x0F1	4	OUT1 invert	Sets the output polarity. 0: noninverting (default). 1: inverting.			
	[3:2]	OUT1 LVPECL differential voltage	Sets the LVPECL output differential voltage (V_{OD}).			
			3	**2**	**V_{OD} (mV)**	
			0	0	400	
			0	1	600	
			1	0	780 (default)	
			1	1	960	
	[1:0]	OUT1 power-down	LVPECL power-down modes.			
			1	**0**	**Mode**	**Output**
			0	0	Normal operation.	On
			0	1	Partial power-down, reference on; use only if there are no external load resistors.	Off
			1	0	Partial power-down, reference on, safe LVPECL power-down (default).	Off
			1	1	Total power-down, reference off; use only if there are no external load resistors.	Off
0x0F4	4	OUT2 invert	Sets the output polarity. 0: noninverting (default). 1: inverting.			
	[3:2]	OUT2 LVPECL differential voltage	Sets the LVPECL output differential voltage (V_{OD}).			
			3	**2**	**V_{OD} (mV)**	
			0	0	400	
			0	1	600	
			1	0	780 (default)	
			1	1	960	
	[1:0]	OUT2 power-down	LVPECL power-down modes.			
			1	**0**	**Mode**	**Output**
			0	0	Normal operation (default).	On
			0	1	Partial power-down, reference on; use only if there are no external load resistors.	Off
			1	0	Partial power-down, reference on, safe LVPECL power-down.	Off
			1	1	Total power-down, reference off; use only if there are no external load resistors.	Off
0x0F5	4	OUT3 invert	Sets the output polarity. 0: noninverting (default). 1: inverting.			
	[3:2]	OUT3 LVPECL differential voltage	Sets the LVPECL output differential voltage (V_{OD}).			
			3	**2**	**V_{OD} (mV)**	
			0	0	400	
			0	1	600	
			1	0	780 (default)	
			1	1	960	
	[1:0]	OUT3 power-down	LVPECL power-down modes.			
			1	**0**	**Mode**	**Output**
			0	0	Normal operation.	On
			0	1	Partial power-down, reference on; use only if there are no external load resistors.	Off
			1	0	Partial power-down, reference on, safe LVPECL power-down (default).	Off
			1	1	Total power-down, reference off; use only if there are no external load resistors.	Off

Table 57. LVDS/CMOS Outputs

Reg. Addr. (Hex)	Bits	Name	Description
0x140	[7:5]	OUT4 output polarity	In CMOS mode, Bits[7:5] select the output polarity of each CMOS output. In LVDS mode, only Bit 5 determines LVDS polarity.

7	6	5	OUT4A (CMOS)	OUT4B (CMOS)	OUT4 (LVDS)
0	0	0	Noninverting	Inverting	Noninverting
0	1	0	Noninverting	Noninverting	Noninverting (default)
1	0	0	Inverting	Inverting	Noninverting
1	1	0	Inverting	Noninverting	Noninverting
0	0	1	Inverting	Noninverting	Inverting
0	1	1	Inverting	Inverting	Inverting
1	0	1	Noninverting	Noninverting	Inverting
1	1	1	Noninverting	Inverting	Inverting

Reg. Addr. (Hex)	Bits	Name	Description
	4	OUT4 CMOS B	In CMOS mode, turn on/off the CMOS B output. There is no effect in LVDS mode. 0: turns off the CMOS B output (default). 1: turns on the CMOS B output.
	3	OUT4 select LVDS/CMOS	Selects LVDS or CMOS logic levels. 0: LVDS (default). 1: CMOS.
	[2:1]	OUT4 LVDS output current	Sets output current level in LVDS mode. This has no effect in CMOS mode.

2	1	Current (mA)	Recommended Termination (Ω)
0	0	1.75	100
0	1	3.5	100 (default)
1	0	5.25	50
1	1	7	50

Reg. Addr. (Hex)	Bits	Name	Description
	0	OUT4 power-down	Powers down output (LVDS/CMOS). 0: power on (default). 1: power off.
0x141	[7:5]	OUT5 output polarity	In CMOS mode, Bits[7:5] select the output polarity of each CMOS output. In LVDS mode, only Bit 5 determines LVDS polarity.

7	6	5	OUT5A (CMOS)	OUT5B (CMOS)	OUT5 (LVDS)
0	0	0	Noninverting	Inverting	Noninverting
0	1	0	Noninverting	Noninverting	Noninverting (default)
1	0	0	Inverting	Inverting	Noninverting
1	1	0	Inverting	Noninverting	Noninverting
0	0	1	Inverting	Noninverting	Inverting
0	1	1	Inverting	Inverting	Inverting
1	0	1	Noninverting	Noninverting	Inverting
1	1	1	Noninverting	Inverting	Inverting

Reg. Addr. (Hex)	Bits	Name	Description
	4	OUT5 CMOS B	In CMOS mode, turns on/off the CMOS B output. There is no effect in LVDS mode. 0: turns off the CMOS B output (default). 1: turns on the CMOS B output.
	3	OUT5 select LVDS/CMOS	Selects LVDS or CMOS logic levels. 0: LVDS (default). 1: CMOS.
	[2:1]	OUT5 LVDS output current	Sets output current level in LVDS mode. This has no effect in CMOS mode.

2	1	Current (mA)	Recommended Termination (Ω)
0	0	1.75	100
0	1	3.5	100 (default)
1	0	5.25	50
1	1	7	50

Reg. Addr. (Hex)	Bits	Name	Description
0x141	0	OUT5 power-down	Powers down output (LVDS/CMOS). 0: power on. 1: power off (default).
0x142	[7:5]	OUT6 output polarity	In CMOS mode, Bits[7:5] select the output polarity of each CMOS output. In LVDS mode, only Bit 5 determines LVDS polarity.

7	6	5	OUT6A (CMOS)	OUT6B (CMOS)	OUT6 (LVDS)
0	0	0	Noninverting	Inverting	Noninverting
0	1	0	Noninverting	Noninverting	Noninverting (default)
1	0	0	Inverting	Inverting	Noninverting
1	1	0	Inverting	Noninverting	Noninverting
0	0	1	Inverting	Noninverting	Inverting
0	1	1	Inverting	Inverting	Inverting
1	0	1	Noninverting	Noninverting	Inverting
1	1	1	Noninverting	Inverting	Inverting

	4	OUT6 CMOS B	In CMOS mode, turns on/off the CMOS B output. There is no effect in LVDS mode. 0: turns off the CMOS B output (default). 1: turns on the CMOS B output.
	3	OUT6 select LVDS/CMOS	Selects LVDS or CMOS logic levels. 0: LVDS (default). 1: CMOS.
	[2:1]	OUT6 LVDS output current	Sets output current level in LVDS mode. This has no effect in CMOS mode.

2	1	Current (mA)	Recommended Termination (Ω)
0	0	1.75	100
0	1	3.5	100 (default)
1	0	5.25	50
1	1	7	50

	0	OUT6 power-down	Powers down output (LVDS/CMOS). 0: power on (default). 1: power off.
0x143	[7:5]	OUT7 output polarity	In CMOS mode, Bits[7:5] select the output polarity of each CMOS output. In LVDS mode, only Bit 5 determines LVDS polarity.

7	6	5	OUT7A (CMOS)	OUT7B (CMOS)	OUT7 (LVDS)
0	0	0	Noninverting	Inverting	Noninverting
0	1	0	Noninverting	Noninverting	Noninverting (default)
1	0	0	Inverting	Inverting	Noninverting
1	1	0	Inverting	Noninverting	Noninverting
0	0	1	Inverting	Noninverting	Inverting
0	1	1	Inverting	Inverting	Inverting
1	0	1	Noninverting	Noninverting	Inverting
1	1	1	Noninverting	Inverting	Inverting

	4	OUT7 CMOS B	In CMOS mode, turns on/off the CMOS B output. There is no effect in LVDS mode. 0: turns off the CMOS B output (default). 1: turns on the CMOS B output.
	3	OUT7 select LVDS/CMOS	Selects LVDS or CMOS logic levels. 0: LVDS (default). 1: CMOS.

Reg. Addr. (Hex)	Bits	Name	Description
0x143	[2:1]	OUT7 LVDS output current	Sets output current level in LVDS mode. This has no effect in CMOS mode.

2	1	Current (mA)	Recommended Termination (Ω)
0	0	1.75	100
0	1	3.5	100 (default)
1	0	5.25	50
1	1	7	50

Reg. Addr. (Hex)	Bits	Name	Description
	0	OUT7 power-down	Powers down output (LVDS/CMOS). 0: power on. 1: power off (default).

Table 58. LVPECL Channel Dividers

Reg. Addr. (Hex)	Bits	Name	Description
0x190	[7:4]	Divider 0 low cycles	Number of clock cycles (minus 1) of the divider input during which divider output stays low. A value of 0x0 means that the divider is low for one input clock cycle (default = 0x0).
	[3:0]	Divider 0 high cycles	Number of clock cycles (minus 1) of the divider input during which divider output stays high. A value of 0x0 means that the divider is high for one input clock cycle (default = 0x0).
0x191	7	Divider 0 bypass	Bypasses and powers down the divider; routes input to divider output. 0: uses divider. 1: bypasses divider (default).
	6	Divider 0 nosync	No sync. 0: obeys chip-level SYNC signal (default). 1: ignores chip-level SYNC signal.
	5	Divider 0 force high	Forces divider output to high. This requires that nosync (Bit 6) also be set. 0: divider output forced to low (default). 1: divider output forced to high.
	4	Divider 0 start high	Selects clock output to start high or start low. 0: starts low (default). 1: starts high.
	[3:0]	Divider 0 phase offset	Phase offset (default = 0x0).
0x192	1	Divider 0 direct to output	Connects OUT0 and OUT1 to Divider 0 or directly to VCO or CLK. 0: OUT0 and OUT1 are connected to Divider 0 (default). 1: If Register 0x1E1[1:0] = 10b, the VCO is routed directly to OUT0 and OUT1. If Register 0x1E1[1:0] = 00b, the CLK is routed directly to OUT0 and OUT1. If Register 0x1E1[1:0] = 01b, there is no effect.
	0	Divider 0 DCCOFF	Duty-cycle correction function. 0: enables duty-cycle correction (default). 1: disables duty-cycle correction.
0x196	[7:4]	Divider 1 low cycles	Number of clock cycles of the divider input during which divider output stays low. A value of 0x0 means that the divider is low for one input clock cycle (default = 0x0).
	[3:0]	Divider 1 high cycles	Number of clock cycles (minus 1) of the divider input during which divider output stays high. A value of 0x0 means that the divider is high for one input clock cycle (default = 0x0).
0x197	7	Divider 1 bypass	Bypasses and powers down the divider; routes input to divider output. 0: uses divider (default). 1: bypasses divider.
	6	Divider 1 nosync	No sync. 0: obeys chip-level SYNC signal (default). 1: ignores chip-level SYNC signal.
	5	Divider 1 force high	Forces divider output to high. This requires that nosync (Bit 6) also be set. 0: divider output forced to low (default). 1: divider output forced to high.

Reg. Addr. (Hex)	Bits	Name	Description
0x197	4	Divider 1 start high	Selects clock output to start high or start low. 0: starts low (default). 1: starts high.
	[3:0]	Divider 1 phase offset	Phase offset (default = 0x0).
0x198	1	Divider 1 direct to output	Connects OUT2 and OUT3 to Divider 2 or directly to VCO or CLK. 0: OUT2 and OUT3 are connected to Divider 1 (default). 1: If Register 0x1E1[1:0] = 10b, the VCO is routed directly to OUT2 and OUT3. If Register 0x1E1[1:0] = 00b, the CLK is routed directly to OUT2 and OUT3. If Register 0x1E1[1:0] = 01b, there is no effect.
	0	Divider 1 DCCOFF	Duty-cycle correction function. 0: enables duty-cycle correction (default). 1: disables duty-cycle correction.

Table 59. LVDS/CMOS Channel Dividers

Reg. Addr. (Hex)	Bits	Name	Description
0x199	[7:4]	Low Cycles Divider 2.1	Number of clock cycles (minus 1) of 2.1 divider input during which 2.1 output stays low. A value of 0x0 means that the divider is low for one input clock cycle (default = 0x0).
	[3:0]	High Cycles Divider 2.1	Number of clock cycles (minus 1) of 2.1 divider input during which 2.1 output stays high. A value of 0x0 means that the divider is high for one input clock cycle (default = 0x0).
0x19A	[7:4]	Phase Offset Divider 2.2	Refer to LVDS/CMOS channel divider function description (default = 0x0).
	[3:0]	Phase Offset Divider 2.1	Refer to LVDS/CMOS channel divider function description (default = 0x0).
0x19B	[7:4]	Low Cycles Divider 2.2	Number of clock cycles (minus 1) of 2.2 divider input during which 2.2 output stays low. A value of 0x0 means that the divider is low for one input clock cycle (default = 0x0).
	[3:0]	High Cycles Divider 2.2	Number of clock cycles (minus 1)of 2.2 divider input during which 2.2 output stays high. A value of 0x0 means that the divider is high for one input clock cycle (default = 0x0).
0x19C	5	Bypass Divider 2.2	Bypasses (and powers down) 2.2 divider logic, routes clock to 2.2 output. 0: does not bypass (default). 1: bypasses.
	4	Bypass Divider 2.1	Bypasses (and powers down) 2.1 divider logic, routes clock to 2.1 output. 0: does not bypass (default). 1: bypasses.
	3	Divider 2 nosync	No sync. 0: obeys chip-level SYNC signal (default). 1: ignores chip-level SYNC signal.
	2	Divider 2 force high	Forces Divider 2 output high. Requires that nosync also be set. 0: forces low (default). 1: forces high.
	1	Start High Divider 2.2	Divider 2.2 start high/low. 0: starts low (default). 1: starts high.
	0	Start High Divider 2.1	Divider 2.1 start high/low. 0: starts low (default). 1: starts high.
0x19D	0	Divider 2 DCCOFF	Duty-cycle correction function. 0: enables duty-cycle correction (default). 1: disables duty-cycle correction.
0x19E	[7:4]	Low Cycles Divider 3.1	Number of clock cycles (minus 1) of 3.1 divider input during which 3.1 output stays low. A value of 0x0 means that the divider is low for one input clock cycle (default = 0x0).
	[3:0]	High Cycles Divider 3.1	Number of clock cycles (minus 1) of 3.1 divider input during which 3.1 output stays high. A value of 0x0 means that the divider is high for one input clock cycle (default = 0x0).

Reg. Addr. (Hex)	Bits	Name	Description
0x19F	[7:4]	Phase Offset Divider 3.2	Refer to LVDS/CMOS channel divider function description (default = 0x0).
	[3:0]	Phase Offset Divider 3.1	Refer to LVDS/CMOS channel divider function description (default = 0x0).
0x1A0	[7:4]	Low Cycles Divider 3.2	Number of clock cycles (minus 1) of 3.2 divider input during which 3.2 output stays low. A value of 0x0 means that the divider is low for one input clock cycle (default = 0x0).
	[3:0]	High Cycles Divider 3.2	Number of clock cycles (minus 1) of 3.2 divider input during which 3.2 output stays high. A value of 0x0 means that the divider is high for one input clock cycle (default = 0x0).
0x1A1	5	Bypass Divider 3.2	Bypasses (and powers down) 3.2 divider logic; routes clock to 3.2 output. 0: does not bypass (default). 1: bypasses.
	4	Bypass Divider 3.1	Bypasses (and powers down) 3.1 divider logic; routes clock to 3.1 output. 0: does not bypass (default). 1: bypasses.
	3	Divider 3 nosync	Nosync. 0: obeys chip-level SYNC signal (default). 1: ignores chip-level SYNC signal.
	2	Divider 3 force high	Forces Divider 3 output high. Requires that nosync also be set. 0: forces low (default). 1: forces high.
	1	Start High Divider 3.2	Divider 3.2 start high/low. 0: starts low (default). 1: starts high.
	0	Start High Divider 3.1	Divider 3.1 start high/low. 0: starts low (default). 1: starts high.
0x1A2	0	Divider 3 DCCOFF	Duty-cycle correction function. 0: enables duty-cycle correction (default). 1: disables duty-cycle correction.

Table 60. VCO Divider and CLK Input

Reg. Addr (Hex)	Bits	Name	Description			
0x1E0	[2:0]	VCO divider	**2**	**1**	**0**	**Divide**
			0	0	0	2.
			0	0	1	3.
			0	1	0	4 (default).
			0	1	1	5.
			1	0	0	6.
			1	0	1	Output static. Note that setting the VCO divider static should occur only after VCO calibration.
			1	1	0	Output static. Note that setting the VCO divider static should occur only after VCO calibration.
			1	1	1	Output static. Note that setting the VCO divider static should occur only after VCO calibration.
0x1E1	4	Power down clock input section	Powers down the clock input section (including CLK buffer, VCO divider, and CLK tree). 0: normal operation (default). 1: power-down.			
	3	Power down VCO clock interface	Powers down the interface block between VCO and clock distribution. 0: normal operation (default). 1: power-down.			
	2	Power down VCO and CLK	Powers down both VCO and CLK input. 0; normal operation (default). 1: power-down.			
	1	Select VCO or CLK	Selects either the VCO or the CLK as the input to VCO divider. 0: selects external CLK as input to VCO divider (default). 1: selects VCO as input to VCO divider; cannot bypass VCO divider when this is selected.			
	0	Bypass VCO divider	Bypasses or uses the VCO divider. 0: uses VCO divider (default). 1: bypasses VCO divider; cannot select VCO as input when this is selected.			

Table 61. System

Reg. Addr. (Hex)	Bits	Name	Description
0x230	2	Power down sync	Powers down the sync function. 0: normal operation of the sync function (default). 1: powers down sync circuitry.
	1	Power down distribution reference	Powers down the reference for distribution section. 0: normal operation of the reference for the distribution section (default). 1: powers down the reference for the distribution section.
	0	Soft sync	The soft sync bit works the same as the $\overline{\text{SYNC}}$ pin, except that the polarity of the bit is reversed. That is, a high level forces selected channels into a predetermined static state, and a 1-to-0 transition triggers a sync. 0: same as $\overline{\text{SYNC}}$ high (default). 1: same as $\overline{\text{SYNC}}$ low.

Table 62. Update All Registers

Reg. Addr (Hex)	Bits	Name	Description
0x232	0	Update all registers	This bit must be set to 1b to transfer the contents of the buffer registers into the active registers. This bit is self-clearing; that is, it does not have to be set back to 0b. 1 (self-clearing): updates all active registers to the contents of the buffer registers.

APPLICATIONS INFORMATION

FREQUENCY PLANNING USING THE AD9517

The AD9517 is a highly flexible PLL. When choosing the PLL settings and version of the AD9517, keep in mind the following guidelines.

The AD9517 has the following four frequency dividers: the reference (or R) divider, the feedback (or N) divider, the VCO divider, and the channel divider. When trying to achieve a particularly difficult frequency divide ratio requiring a large amount of frequency division, some of the frequency division can be done by either the VCO divider or the channel divider, thus allowing a higher phase detector frequency and more flexibility in choosing the loop bandwidth.

Within the AD9517 family, lower VCO frequencies generally result in slightly lower jitter. The difference in integrated jitter (from 12 kHz to 20 MHz offset) for the same output frequency is usually less than 150 fs over the entire VCO frequency range (1.45 GHz to 2.95 GHz) of the AD9517 family. If the desired frequency plan can be achieved with a version of the AD9517 that has a lower VCO frequency, choosing the lower frequency part results in the lowest phase noise and the lowest jitter. However, choosing a higher VCO frequency may result in more flexibility in frequency planning.

Choosing a nominal charge pump current in the middle of the allowable range as a starting point allows the designer to increase or decrease the charge pump current, and thus allows the designer to fine-tune the PLL loop bandwidth in either direction.

ADIsimCLK is a powerful PLL modeling tool that can be downloaded from www.analog.com. It is a very accurate tool for determining the optimal loop filter for a given application.

USING THE AD9517 OUTPUTS FOR ADC CLOCK APPLICATIONS

Any high speed ADC is extremely sensitive to the quality of its sampling clock. An ADC can be thought of as a sampling mixer, and any noise, distortion, or timing jitter on the clock is combined with the desired signal at the analog-to-digital output. Clock integrity requirements scale with the analog input frequency and resolution, with higher analog input frequency applications at ≥14-bit resolution being the most stringent. The theoretical SNR of an ADC is limited by the ADC resolution and the jitter on the sampling clock. Considering an ideal ADC of infinite resolution where the step size and quantization error can be ignored, the available SNR can be expressed approximately by

$$SNR(\text{dB}) = 20 \times \log\left(\frac{1}{2\pi f_A t_J}\right)$$

where:
f_A is the highest analog frequency being digitized.
t_J is the rms jitter on the sampling clock.

Figure 70 shows the required sampling clock jitter as a function of the analog frequency and effective number of bits (ENOB).

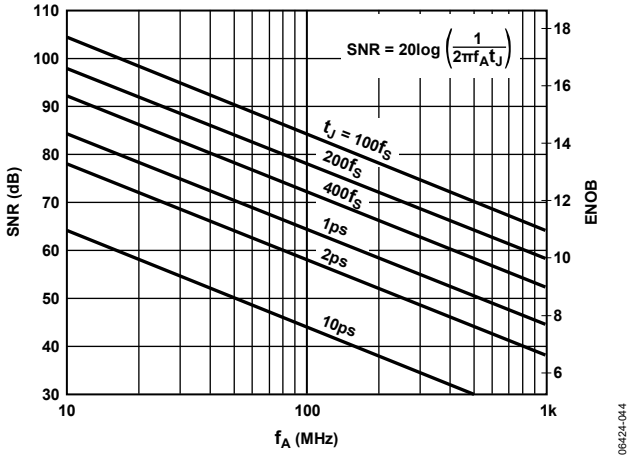

Figure 70. SNR and ENOB vs. Analog Input Frequency

See the AN-756 Application Note, *Sampled Systems and the Effects of Clock Phase Noise and Jitter*; and the AN-501 Application Note, *Aperture Uncertainty and ADC System Performance*, at www.analog.com.

Many high performance ADCs feature differential clock inputs to simplify the task of providing the required low jitter clock on a noisy PCB. (Distributing a single-ended clock on a noisy PCB may result in coupled noise on the sample clock. Differential distribution has inherent common-mode rejection that can provide superior clock performance in a noisy environment.) The AD9517 features both LVPECL and LVDS outputs that provide differential clock outputs, which enable clock solutions that maximize converter SNR performance. The input requirements of the ADC (differential or single-ended, logic level, termination) should be considered when selecting the best clocking/converter solution.

LVPECL CLOCK DISTRIBUTION

The LVPECL outputs of the AD9517 provide the lowest jitter clock signals that are available from the AD9517. The LVPECL outputs (because they are open emitter) require a dc termination to bias the output transistors. The simplified equivalent circuit in Figure 59 shows the LVPECL output stage.

In most applications, an LVPECL far-end Thevenin termination (see Figure 71) or Y-termination (see Figure 72) is recommended. In each case, the V_S of the receiving buffer should match the V_{S_LVPECL} voltage. If it does not, ac coupling is recommended (see Figure 73). In the case of Figure 73, pull-down resistors of <150 Ω are not recommended when V_{S_LVEPCL} = 3.3 V; if used, damage to the LVPECL drivers may result. The minimum recommended pull-down resistor size for V_{S_LVPECL} = 2.5 V is 100 Ω.

The resistor network is designed to match the transmission line impedance (50 Ω) and the switching threshold (V_S − 1.3 V).

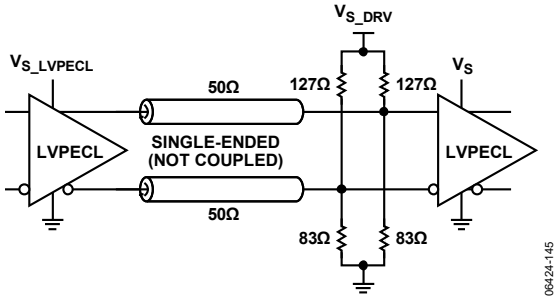

Figure 71. DC-Coupled 3.3 V LVPECL Far-End Thevenin Termination

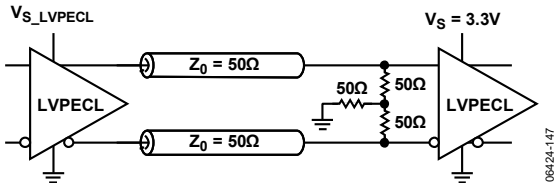

Figure 72. DC-Coupled 3.3 V LVPECL Y-Termination

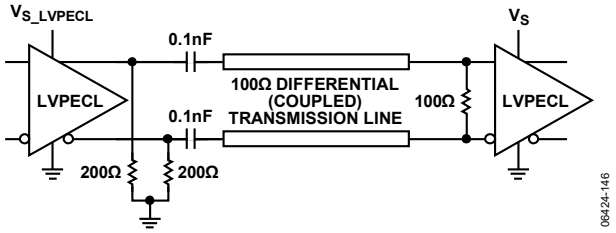

Figure 73. AC-Coupled LVPECL with Parallel Transmission Line

LVPECL Y-termination is an elegant termination scheme that uses the fewest components and offers both odd- and even-mode impedance matching. Even-mode impedance matching is an important consideration for closely coupled transmission lines at high frequencies. Its main drawback is that it offers limited flexibility for varying the drive strength of the emitter-follower LVPECL driver. This can be an important consideration when driving long trace lengths but is usually not an issue. In the case shown in Figure 72, where V_{S_LVPECL} = 2.5 V, the 50 Ω termination resistor that is connected to ground should be changed to 19 Ω.

Thevenin-equivalent termination uses a resistor network to provide 50 Ω termination to a dc voltage that is below V_{OL} of the LVPECL driver. In this case, V_{S_LVPECL} on the AD9517 should equal V_S of the receiving buffer. Although the resistor combination shown in Figure 72 results in a dc bias point of V_{S_LVPECL} − 2 V, the actual common-mode voltage is V_{S_LVPECL} − 1.3 V because additional current flows from the AD9517 LVPECL driver through the pull-down resistor.

The circuit is identical when V_{S_LVPECL} = 2.5 V, except that the pull-down resistor is 62.5 Ω and the pull-up resistor is 250 Ω.

LVDS CLOCK DISTRIBUTION

The AD9517 provides four clock outputs (OUT4 to OUT7) that are selectable as either CMOS or LVDS level outputs. LVDS is a differential output option that uses a current mode output stage. The nominal current is 3.5 mA, which yields 350 mV output swing across a 100 Ω resistor. An output current of 7 mA is also available in cases where a larger output swing is required. The LVDS output meets or exceeds all ANSI/TIA/EIA-644 specifications.

A recommended termination circuit for the LVDS outputs is shown in Figure 74.

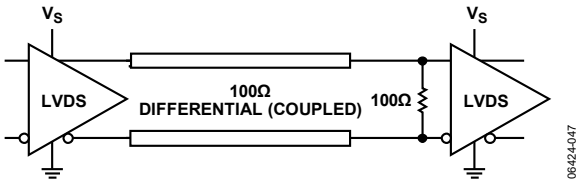

Figure 74. LVDS Output Termination

See the AN-586 Application Note, *LVDS Data Outputs for High-Speed Analog-to-Digital Converters* for more information on LVDS.

CMOS CLOCK DISTRIBUTION

The AD9517 provides four clock outputs (OUT4 to OUT7) that are selectable as either CMOS or LVDS level outputs. When selected as CMOS, each output becomes a pair of CMOS outputs, each of which can be individually turned on or off and set as noninverting or inverting. These outputs are 3.3 V CMOS compatible.

Whenever single-ended CMOS clocking is used, some of the following general guidelines should be used.

Point-to-point nets should be designed such that a driver has only one receiver on the net, if possible. This allows for simple termination schemes and minimizes ringing due to possible mismatched impedances on the net.

Series termination at the source is generally required to provide transmission line matching and/or to reduce current transients at the driver. The value of the resistor is dependent on the board design and timing requirements (typically 10 Ω to 100 Ω is used).

CMOS outputs are also limited in terms of the capacitive load or trace length that they can drive. Typically, trace lengths of less than 3 inches are recommended to preserve signal rise/fall times and preserve signal integrity.

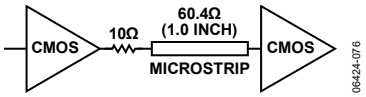

Figure 75. Series Termination of CMOS Output

Termination at the far end of the PCB trace is a second option. The CMOS outputs of the AD9517 do not supply enough current to provide a full voltage swing with a low impedance resistive, far-end termination, as shown in Figure 76. The far-end termination network should match the PCB trace impedance and provide the desired switching point. The reduced signal swing may still meet receiver input requirements in some applications. This can be useful when driving long trace lengths on less critical nets.

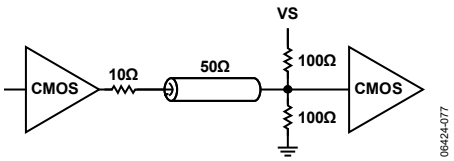

Figure 76. CMOS Output with Far-End Termination

Because of the limitations of single-ended CMOS clocking, consider using differential outputs when driving high speed signals over long traces. The AD9517 offers both LVPECL and LVDS outputs that are better suited for driving long traces where the inherent noise immunity of differential signaling provides superior performance for clocking converters.

OUTLINE DIMENSIONS

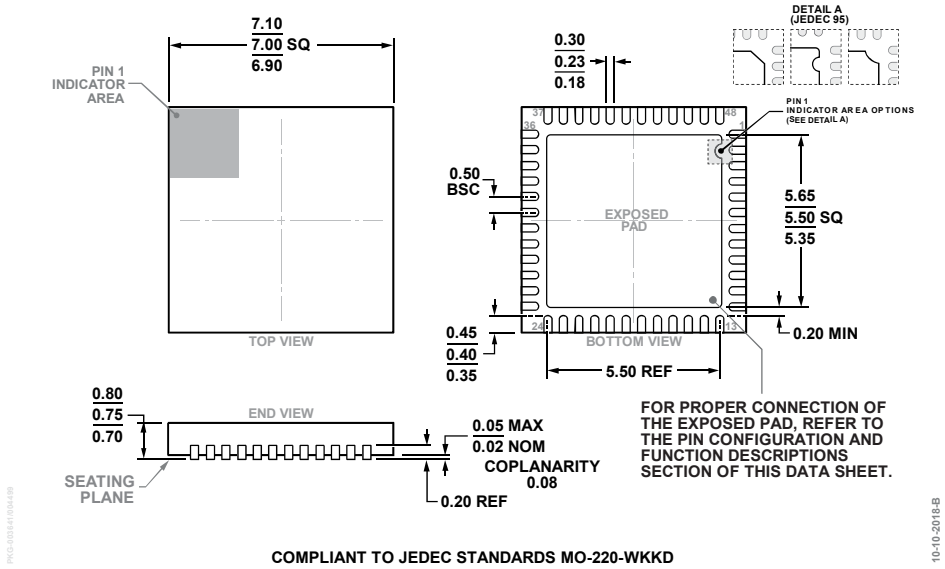

Figure 77. 48-Lead Lead Frame Chip Scale Package [LFCSP]
7 mm × 7 mm Body and 0.75 mm Package Height
(CP-48-9)
Dimensions shown in millimeters

ORDERING GUIDE

Model[1]	Temperature Range	Package Description	Package Option
AD9517-0ABCPZ	−40°C to +85°C	48-Lead Lead Frame Chip Scale Package (LFCSP)	CP-48-9
AD9517-0ABCPZ-RL7	−40°C to +85°C	48-Lead Lead Frame Chip Scale Package (LFCSP)	CP-48-9
AD9517-0A/PCBZ		Evaluation Board	

[1] Z = RoHS Compliant Part.

NOTES

©2007–2020 Analog Devices, Inc. All rights reserved. Trademarks and registered trademarks are the property of their respective owners.
D06424-9/20(F)