HDMI™ Display Interface

AD9398

FEATURES

HDMI interface
- Supports high bandwidth digital content protection
- RGB to YCbCr 2-way color conversion
- 1.8 V/3.3 V power supply
- 100-lead, Pb-free LQFP
- RGB and YCbCr output formats

Digital video interface
- HDMI 1.1, DVI 1.0
- 150 MHz HDMI receiver
- Supports high bandwidth digital content protection (HDCP 1.1)

Digital audio interface
- HDMI 1.1-compatible audio interface
- SPDIF (IEC90658-compatible) digital audio output
- Multichannel I²S audio output (up to 8 channels)

APPLICATIONS

Advanced TVs
HDTVs
Projectors
LCD monitors

FUNCTIONAL BLOCK DIAGRAM

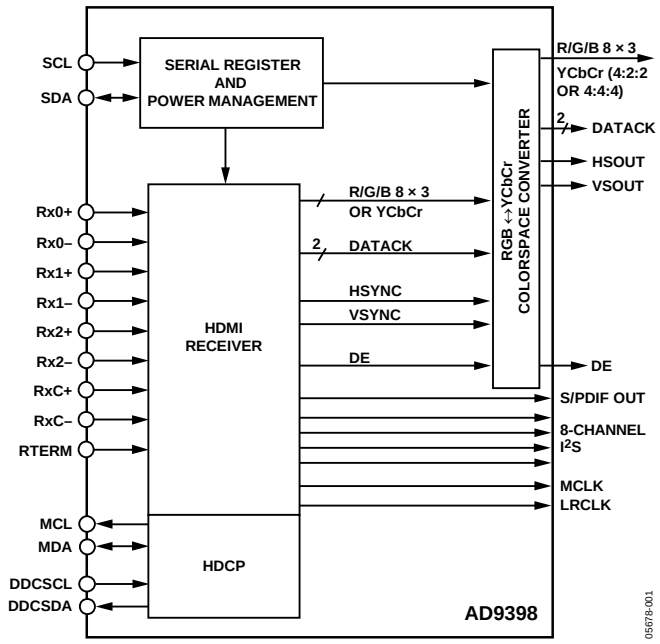

Figure 1.

GENERAL DESCRIPTION

The AD9398 offers a high definition multimedia interface (HDMI) receiver integrated on a single chip. Also included is support for high bandwidth digital content protection (HDCP).

The AD9398 contains a HDMI 1.0-compatible receiver and supports all HDTV formats (up to 1080p) and display resolutions up to SXGA (1280 × 1024 @ 75 Hz). The receiver features an intrapair skew tolerance of up to one full clock cycle. With the inclusion of HDCP, displays can now receive encrypted video content. The AD9398 allows for authentication of a video receiver, decryption of encoded data at the receiver, and renewability of that authentication during transmission as specified by the HDCP 1.1 protocol.

Fabricated in an advanced CMOS process, the AD9398 is provided in a space-saving 100-lead, surface-mount, Pb-free, plastic LQFP and is specified over the 0°C to 70°C temperature range.

Rev. 0
Information furnished by Analog Devices is believed to be accurate and reliable. However, no responsibility is assumed by Analog Devices for its use, nor for any infringements of patents or other rights of third parties that may result from its use. Specifications subject to change without notice. No license is granted by implication or otherwise under any patent or patent rights of Analog Devices. Trademarks and registered trademarks are the property of their respective owners.

One Technology Way, P.O. Box 9106, Norwood, MA 02062-9106, U.S.A.
Tel: 781.329.4700 **www.analog.com**
Fax: 781.461.3113 **© 2005 Analog Devices, Inc. All rights reserved.**

TABLE OF CONTENTS

Features 1
Applications 1
Functional Block Diagram 1
General Description 1
Specifications 3
  Electrical Characteristics 3
  Digital Interface Electrical Characteristics 3
Absolute Maximum Ratings 5
  Explanation of Test Levels 5
  ESD Caution 5
Pin Configuration and Function Descriptions 6
Design Guide 9
  General Description 9
  Digital Inputs 9
  Serial Control Port 9
  Output Signal Handling 9
  Power Management 9
  Timing 10
  VSYNC Filter and Odd/Even Fields 10
  HDMI Receiver 10
  DE Generator 10
  4:4:4 to 4:2:2 Filter 11
  Audio PLL Setup 12
  Audio Board Level Muting 13
  Output Data Formats 13
2-Wire Serial Register Map 14
2-Wire Serial Control Register Details 25
  Chip Identification 25
  BT656 Generation 27
  Macrovision 28
  Color Space Conversion 29
2-Wire Serial Control Port 36
  Data Transfer via Serial Interface 36
  Serial Interface Read/Write Examples 37
PCB Layout Recommendations 38
  Power Supply Bypassing 38
  Outputs (Both Data and Clocks) 38
  Digital Inputs 38
Color Space Converter (CSC) Common Settings 39
Outline Dimensions 41
  Ordering Guide 41

REVISION HISTORY

10/05—Revision 0: Initial Version

SPECIFICATIONS

ELECTRICAL CHARACTERISTICS

V_{DD}, V_D = 3.3 V, DV_{DD} = PV_{DD} = 1.8 V, ADC clock = maximum.

Table 1.

			AD9398KSTZ-100			AD9398KSTZ-150			
Parameter	**Temp**	**Test Level**	**Min**	**Typ**	**Max**	**Min**	**Typ**	**Max**	**Unit**
DIGITAL INPUTS (5 V TOLERANT)									
Input Voltage, High (V_{IH})	Full	VI	2.6			2.6			V
Input Voltage, Low (V_{IL})	Full	VI			0.8			0.8	V
Input Current, High (I_{IH})	Full	V		−82			−82		µA
Input Current, Low (I_{IL})	Full	V		82			82		µA
Input Capacitance	25°C	V		3			3		pF
DIGITAL OUTPUTS									
Output Voltage, High (V_{OH})	Full	VI	V_{DD} − 0.1			V_{DD} − 0.1			V
Output Voltage, Low (V_{OL})	Full	VI			0.4			0.4	V
Duty Cycle, DATACK	Full	V	45	50	55	45	50	55	%
Output Coding				Binary			Binary		
THERMAL CHARACTERISTICS									
θ_{JA} Junction-to-Ambient		V		35			35		°C/W

DIGITAL INTERFACE ELECTRICAL CHARACTERISTICS

V_{DD} = V_D =3.3 V, DV_{DD} = PV_{DD} = 1.8 V, ADC clock = maximum.

Table 2.

			AD9398KSTZ-100			AD9398KSTZ-150			
Parameter	**Test Level**	**Conditions**	**Min**	**Typ**	**Max**	**Min**	**Typ**	**Max**	**Unit**
RESOLUTION				8			8		Bit
DC DIGITAL I/O SPECIFICATIONS									
High-Level Input Voltage (V_{IH})	VI		2.5			2.5			V
Low-Level Input Voltage (V_{IL})	VI				0.8			0.8	V
High-Level Output Voltage (V_{OH})	VI		V_{DD} − 0.1						V
Low-Level Output Voltage (V_{OL})	VI		V_{DD} − 0.1		0.1			0.1	V
DC SPECIFICATIONS									
Output High Level	IV	Output drive = high		36			36		mA
(I_{OHD}) (V_{OUT} = V_{OH})	IV	Output drive = low		24			24		mA
Output Low Level	IV	Output drive = high		12			12		mA
I_{OLD}, (V_{OUT} = V_{OL})	IV	Output drive = low		8			8		mA
DATACK High Level	IV	Output drive = high		40			40		mA
V_{OHC}, (V_{OUT} = V_{OH})	IV	Output drive = low		20			20		mA
DATACK Low Level	IV	Output drive = high		30			30		mA
V_{OLC}, (V_{OUT} = V_{OL})	IV	Output drive = low		15			15		mA
Differential Input Voltage, Single-Ended Amplitude	IV		75		700	75		700	mV

Parameter	Test Level	Conditions	AD9398KSTZ-100 Min	AD9398KSTZ-100 Typ	AD9398KSTZ-100 Max	AD9398KSTZ-150 Min	AD9398KSTZ-150 Typ	AD9398KSTZ-150 Max	Unit
POWER SUPPLY									
V_D Supply Voltage	IV		3.15	3.3	3.47	3.15	3.3	3.47	V
V_{DD} Supply Voltage	IV		1.7	3.3	347	1.7	3.3	347	V
DV_{DD} Supply Voltage	IV		1.7	1.8	1.9	1.7	1.8	1.9	V
PV_{DD} Supply Voltage	IV		1.7	1.8	1.9	1.7	1.8	1.9	V
I_{VD} Supply Current (Typical Pattern)[1]	V			80	100		80	110	mA
I_{VDD} Supply Current (Typical Pattern)[2]	V			40	100[3]		55	175[1]	mA
I_{DVDD} Supply Current (Typical Pattern)[1, 4]	V			88	110		110	145	mA
I_{PVDD} Supply Current (Typical Pattern)	V			26	35		30	40	mA
Power-Down Supply Current (I_{PD})	VI			130			130		mA
AC SPECIFICATIONS									
Intrapair (+ to −) Differential Input Skew (T_{DPS})	IV							360	ps
Channel to Channel Differential Input Skew (T_{CCS})	IV							6	Clock period
Low-to-High Transition Time for Data and Controls (D_{LHT})	IV	Output drive = high; C_L = 10 pF						900	ps
	IV	Output drive = low; C_L = 5 pF						1300	ps
Low-to-High Transition Time for DATACK (D_{LHT})	IV	Output drive = high; C_L = 10 pF						650	ps
	IV	Output drive = low; C_L = 5 pF						1200	ps
High-to-Low Transition Time for Data and Controls (D_{HLT})	IV	Output drive = high; C_L = 10 pF						850	ps
	IV	Output drive = low; C_L = 5 pF						1250	ps
High-to-Low Transition Time for DATACK (D_{HLT})	IV	Output drive = high; C_L = 10 pF						800	ps
	IV	Output drive = low; C_L = 5 pF						1200	ps
Clock-to-Data Skew[5] (T_{SKEW})	IV		−0.5		2.0	−0.5		2.0	ns
Duty Cycle, DATACK	IV		45	50				55	%
DATACK Frequency (F_{CIP})	VI		20					150	MHz

[1] The typical pattern contains a gray scale area, output drive = high. Worst-case pattern is alternating black and white pixels.
[2] The typical pattern contains a gray scale area, output drive = high.
[3] Specified current and power values with a worst-case pattern (on/off).
[4] DATACK load = 10 pF, data load = 5 pF.
[5] Drive strength = high.

ABSOLUTE MAXIMUM RATINGS

Table 3.

Parameter	Rating
V_D	3.6 V
V_{DD}	3.6 V
DV_{DD}	1.98 V
PV_{DD}	1.98 V
Analog Inputs	V_D to 0.0 V
Digital Inputs	5 V to 0.0 V
Digital Output Current	20 mA
Operating Temperature Range	−25°C to +85°C
Storage Temperature Range	−65°C to +150°C
Maximum Junction Temperature	150°C
Maximum Case Temperature	150°C

Stresses above those listed under Absolute Maximum Ratings may cause permanent damage to the device. This is a stress rating only; functional operation of the device at these or any other conditions above those indicated in the operational section of this specification is not implied. Exposure to absolute maximum rating conditions for extended periods may affect device reliability.

EXPLANATION OF TEST LEVELS

Table 4.

Level	Test
I	100% production tested.
II	100% production tested at 25°C and sample tested at specified temperatures.
III	Sample tested only.
IV	Parameter is guaranteed by design and characterization testing.
V	Parameter is a typical value only.
VI	100% production tested at 25°C; guaranteed by design and characterization testing.

ESD CAUTION

ESD (electrostatic discharge) sensitive device. Electrostatic charges as high as 4000 V readily accumulate on the human body and test equipment and can discharge without detection. Although this product features proprietary ESD protection circuitry, permanent damage may occur on devices subjected to high energy electrostatic discharges. Therefore, proper ESD precautions are recommended to avoid performance degradation or loss of functionality.



PIN CONFIGURATION AND FUNCTION DESCRIPTIONS

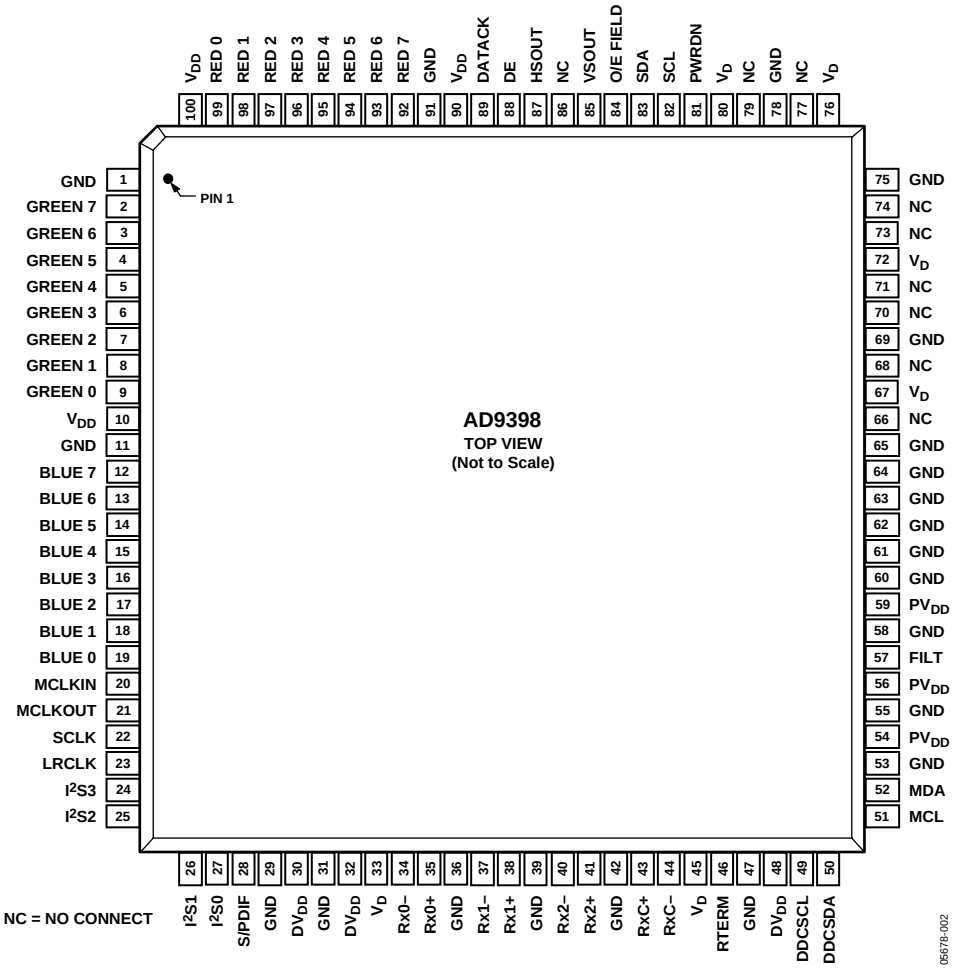

Figure 2. Pin Configuration

Table 5. Complete Pinout List

Pin Type	Pin No.	Mnemonic	Function	Value
INPUTS	81	PWRDN	Power-Down Control	3.3 V CMOS
DIGITAL VIDEO DATA INPUTS	35	Rx0+	Digital Input Channel 0 True	TMDS
	34	Rx0−	Digital Input Channel 0 Complement	TMDS
	38	Rx1+	Digital Input Channel 1 True	TMDS
	37	Rx1−	Digital Input Channel 1 Complement	TMDS
	41	Rx2+	Digital Input Channel 2 True	TMDS
	40	Rx2−	Digital Input Channel 2 Complement	TMDS
DIGITAL VIDEO CLOCK INPUTS	43	RxC+	Digital Data Clock True	TMDS
	44	RxC−	Digital Data Clock Complement	TMDS
OUTPUTS	92 to 99	RED [7:0]	Outputs of Red Converter, Bit 7 is MSB	V_{DD}
	2 to 9	GREEN [7:0]	Outputs of Green Converter, Bit 7 is MSB	V_{DD}
	12 to 19	BLUE [7:0]	Outputs of Blue Converter, Bit 7 is MSB	V_{DD}
	89	DATACK	Data Output Clock	V_{DD}
	87	HSOUT	HSYNC Output Clock (Phase-Aligned with DATACK)	V_{DD}
	85	VSOUT	VSYNC Output Clock (Phase-Aligned with DATACK)	V_{DD}
	84	FIELD	Odd/Even Field Output	V_{DD}
REFERENCES	57	FILT	Connection for External Filter Components For audio PLL	PV_{DD}

Pin Type	Pin No.	Mnemonic	Function	Value
POWER SUPPLY	80, 76, 72, 67, 45, 33	V_D	Analog Power Supply and DVI Terminators	3.3 V
	100, 90, 10	V_{DD}	Output Power Supply	1.8 V to 3.3 V
	59, 56, 54	PV_{DD}	PLL Power Supply	1.8 V
	48, 32, 30	DV_{DD}	Digital Logic Power Supply	1.8 V
		GND	Ground	0 V
CONTROL	83	SDA	Serial Port Data I/O	3.3 V CMOS
	82	SCL	Serial Port Data Clock	3.3 V CMOS
HDCP	49	DDCSCL	HDCP Slave Serial Port Data Clock	3.3 V CMOS
	50	DDCSDA	HDCP Slave Serial Port Data I/O	3.3 V CMOS
	51	MCL	HDCP Master Serial Port Data Clock	3.3 V CMOS
	52	MDA	HDCP Master Serial Port Data I/O	3.3 V CMOS
AUDIO DATA OUTPUTS	28	S/PDIF	S/PDIF Digital Audio Output	V_{DD}
	27	I^2S0	I^2S Audio (Channel 1, Channel 2)	V_{DD}
	26	I^2S1	I^2S Audio (Channel 3, Channel 4)	V_{DD}
	25	I^2S2	I^2S Audio (Channel 5, Channel 6)	V_{DD}
	24	I^2S3	I^2S Audio (Channel 7, Channel 8)	V_{DD}
	20	MCLKIN	External Reference Audio Clock In	V_{DD}
	21	MCLKOUT	Audio Master Clock Output	V_{DD}
	22	SCLK	Audio Serial Clock Output	V_{DD}
	23	LRCLK	Data Output Clock for Left and Right Audio Channels	V_{DD}
DATA ENABLE	88	DE	Data Enable	3.3 V CMOS
RTERM	46	RTERM	Sets Internal Termination Resistance	500 Ω

Table 6. Pin Function Descriptions

Mnemonic	Description
INPUTS	
Rx0+	Digital Input Channel 0 True.
Rx0−	Digital Input Channel 0 Complement.
Rx1+	Digital Input Channel 1 True.
Rx1−	Digital Input Channel 1 Complement.
Rx2+	Digital Input Channel 2 True.
Rx2−	Digital input Channel 2 Complement.
	These six pins receive three pairs of transition minimized differential signaling (TMDS) pixel data (at 10× the pixel rate) from a digital graphics transmitter.
RxC+	Digital Data Clock True.
RxC−	Digital Data Clock Complement.
	This clock pair receives a TMDS clock at 1× pixel data rate.
FILT	External Filter Connection.
	For proper operation, the audio-clock generator PLL requires an external filter. Connect the filter shown in Figure 8 to this pin. For optimal performance, minimize noise and parasitics on this node. For more information see the PCB Layout Recommendations section .
PWRDN	Power-Down Control/Three-State Control. The function of this pin is programmable via Register 0x26 [2:1].
OUTPUTS	
HSOUT	Horizontal Sync Output.
	A reconstructed and phase-aligned version of the HSYNC input. Both the polarity and duration of this output can be programmed via serial bus registers. By maintaining alignment with DATACK and DATA, data timing with respect to horizontal sync can always be determined.
VSOUT	Vertical Sync Output.
	The separated VSYNC from a composite signal or a direct pass through of the VSYNC signal. The polarity of this output can be controlled via the serial bus bit (Register 0x24 [6]).
O/E FIELD	Odd/Even Field Bit for Interlaced Video. This output identifies whether the current field (in an interlaced signal) is odd or even. The polarity of this signal is programmable via Register 0x24[4].
DE	Data Enable that defines valid video. Can be received in the signal or generated by the AD9398.

Mnemonic	Description
RTERM	RTERM is the termination resistor used to drive the AD9398 internally to a precise 50 Ω termination for TMDS lines. This should be a 500 Ω 1% tolerance resistor.
AUDIO DATA OUTPUT	
S/PDIF	Sony/Philips Digital Interface. Supports digital audio from 32 kbps to 192 kbps.
I^2S0 to I^2S3	Inter-IC Sound Channel 0 through Channel 3. Each line supports two channels of digital audio.
MCLKIN	Master Audio Clock External. Used if internal MCLK is not generated.
MCLKOUT	Master Audio Clock Output to Drive Audio DACs.
SCLK	Serial Clock Out to support Digital Audio.
LRCLK	Data Output Clock for Left and Right Audio Channels.
SERIAL PORT	
SDA	Serial Port Data I/O for Programming AD9398 Registers—I^2C Address is 0x98.
SCL	Serial Port Data Clock for Programming AD9398 Registers.
DDCSDA	Serial Port Data I/O for HDCP Communications to Transmitter—I^2C Address is 0x74 or 0x76.
DDCSCL	Serial Port Data Clock for HDCP Communications to Transmitter.
MDA	Serial Port Data I/O to EEPROM with HDCP Keys—I^2C Address is 0xA0.
MCL	Serial Port Data Clock to EEPROM with HDCP Keys.
DATA OUTPUTS	
RED [7:0]	Data Output, Red Channel.
GREEN [7:0]	Data Output, Green Channel.
BLUE [7:0]	Data Output, Blue Channel. The main data outputs. Bit 7 is the MSB. The delay from pixel sampling time to output is fixed, but is different if the color space converter is used. When the sampling time is changed by adjusting the phase register, the output timing is shifted as well. The DATACK and HSOUT outputs are also moved, so the timing relationship among the signals is maintained.
DATA CLOCK OUTPUT	
DATACK	Data Clock Output. This is the main clock output signal used to strobe the output data and HSOUT into external logic. Four possible output clocks can be selected with Register 0x25 [7:6]. These are related to the pixel clock (1/2× pixel clock, 1× pixel clock, 2× frequency pixel clock, and a 90° phase shifted pixel clock). They are produced either by the internal PLL clock generator or EXTCLK and are synchronous with the pixel sampling clock. The polarity of DATACK can also be inverted via Register 0x24 [0]. The sampling time of the internal pixel clock can be changed by adjusting the phase register. When this is changed, the pixel-related DATACK timing is shifted as well. The DATA, DATACK, and HSOUT outputs are all moved, so the timing relationship among the signals is maintained.
POWER SUPPLY[1]	
V_D (3.3 V)	Analog Power Supply. These pins supply power to the ADCs and terminators. They should be as quiet and filtered as possible.
V_{DD} (1.8 V to 3.3 V)	Digital Output Power Supply. A large number of output pins (up to 27) switching at high speed (up to 150 MHz) generates many power supply transients (noise). These supply pins are identified separately from the V_D pins, so output noise transferred into the sensitive analog circuitry can be minimized. If the AD9398 is interfacing with lower voltage logic, V_{DD} may be connected to a lower supply voltage (as low as 1.8 V) for compatibility.
PV_{DD} (1.8 V)	Clock Generator Power Supply. The most sensitive portion of the AD9398 is the clock generation circuitry. These pins provide power to the clock PLL and help the user design for optimal performance. The designer should provide quiet, noise-free power to these pins.
DV_{DD} (1.8 V)	Digital Input Power Supply. This supplies power to the digital logic.
GND	Ground. The ground return for all circuitry on chip. It is recommended that the AD9398 be assembled on a single solid ground plane, with careful attention to ground current paths.

[1] The supplies should be sequenced such that V_D and V_{DD} are never less than 300 mV below DV_{DD}. At no time should DV_{DD} be more than 300 mV greater than V_D or V_{DD}.

DESIGN GUIDE

GENERAL DESCRIPTION

The AD9398 is a fully integrated solution for receiving DVI/HDMI signals and is capable of decoding HDCP-encrypted signals through connections to an external EEPROM. The circuit is ideal for providing an interface for HDTV monitors or as the front end to high performance video scan converters.

Implemented in a high performance CMOS process, the interface can capture signals with pixel rates of up to 150 MHz.

The AD9398 includes all necessary circuitry for decoding TMDS signaling including those encrypted with HDCP. Included in the output formatting is a color space converter (CSC), which accommodates any input color space and can output any color space. All controls are programmable via a 2-wire serial interface. Full integration of these sensitive mixed signal functions makes system design straight-forward and less sensitive to the physical and electrical environments.

DIGITAL INPUTS

The digital control inputs (I^2C) on the AD9398 operate to 3.3 V CMOS levels. In addition, all digital inputs, except the TMDS (HDMI/DVI) inputs, are 5 V tolerant (applying 5 V to them does not cause damage.) The TMDS input pairs (Rx0+/Rx0−, Rx1+/Rx1−, Rx2+/Rx2−, and RxC+/RxC−) must maintain a 100 Ω differential impedance (through proper PCB layout) from the connector to the input where they are internally terminated (50 Ω to 3.3 V). If additional ESD protection is desired, use of a California Micro Devices (CMD) CM1213 (among others) series low capacitance ESD protection offers 8 kV of protection to the HDMI TMDS lines.

SERIAL CONTROL PORT

The serial control port is designed for 3.3 V logic. However, it is tolerant of 5 V logic signals.

OUTPUT SIGNAL HANDLING

The digital outputs operate from 1.8 V to 3.3 V (V_{DD}).

POWER MANAGEMENT

The AD9398 uses the activity detect circuits, the active interface bits in the serial bus, the active interface override bits, the power-down bit, and the power-down pin to determine the correct power state. There are four power states: full power, seek mode, auto power-down, and power-down. Table 7 summarizes how the AD9398 determines the power mode to use and which circuitry is powered on/off in each of these modes. The power-down command has priority and then the automatic circuitry. The power-down pin (Pin 81—polarity set by Register 0x26[3]) can drive the chip into four power-down options. Bit 2 and Bit 1 of Register 0x26 control these four options. Bit 0 controls whether the chip is powered down or the outputs are placed in high impedance mode (with the exception of SOG). Bit 7 to Bit 4 of Register 0x26 control whether the outputs, SOG, Sony Philips digital interface (SPDIF) or Inter-IC sound bus (I^2S or IIS) outputs are in high impedance mode. See the 2-Wire Serial Control Register Detail section for the details.

Table 7. Power-Down Mode Descriptions

	Inputs			
Mode	**Power-Down[1]**	**Sync Detect[2]**	**Auto PD Enable[3]**	**Power-On or Comments**
Full Power	1	1	X	Everything
Seek Mode	1	0	0	Everything
Seek Mode	1	0	1	Serial bus, sync activity detect, SOG, band gap reference
Power-Down	0	X		Serial bus, sync activity detect, SOG, band gap reference

[1] Power-down is controlled via Bit 0 in Serial Bus Register 0x26.
[2] Sync detect is determined by OR'ing Bit 7 to Bit 2 in Serial Bus Register 0x15.
[3] Auto power-down is controlled via Bit 7 in Serial Bus Register 0x27.

TIMING

The output data clock signal is created so that its rising edge always occurs between data transitions and can be used to latch the output data externally.

Figure 3 shows the timing operation of the AD9398.

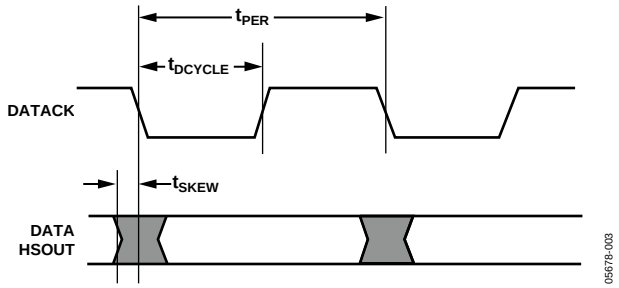

Figure 3. Output Timing

VSYNC FILTER AND ODD/EVEN FIELDS

The VSYNC filter is used to eliminate spurious VSYNCs, maintain a consistent timing relationship between the VSYNC and HSYNC output signals, and generate the odd/even field output.

The filter works by examining the placement of VSYNC with respect to HSYNC and, if necessary, slightly shifting it in time at the VSOUT output. The goal is to keep the VSYNC and HSYNC leading edges from switching at the same time, eliminating confusion as to when the first line of a frame occurs. Enabling the VSYNC filter is done with Register 0x21[5]. Use of the VSYNC filter is recommended for all cases, including interlaced video, and is required when using the HSYNC per VSYNC counter. Figure 4 and Figure 5 illustrate even/odd field determination in two situations.

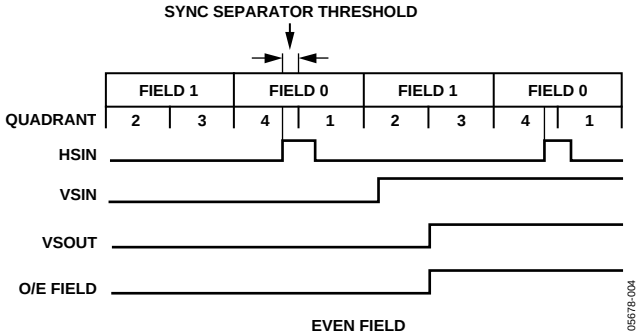

Figure 4. VSYNC Filter—Even

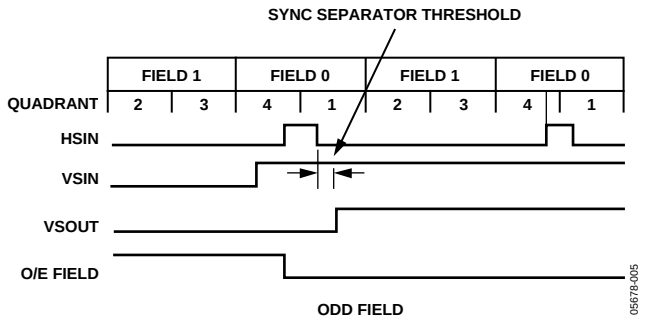

Figure 5. VSYNC Filter—Odd

HDMI RECEIVER

The HDMI receiver section of the AD9398 allows the reception of a digital video stream, which is backward compatible with DVI and able to accommodate not only video of various formats (RGB, YCrCb 4:4:4, 4:2:2), but also up to eight channels of audio. Infoframes are transmitted carrying information about the video format, audio clocks, and many other items necessary for a monitor to use fully the information stream available.

The earlier digital visual interface (DVI) format was restricted to an RGB 24-bit color space only. Embedded in this data stream were HSYNCs, VSYNCs, and display enable (DE) signals, but no audio information. The HDMI specification allows transmission of all the DVI capabilities, but adds several YCrCb formats that make the inclusion of a programmable color space converter (CSC) a very desirable feature. With this, the scaler following the AD9398 can specify that it always wishes to receive a particular format—for instance, 4:2:2 YCrCb—regardless of the transmitted mode. If RGB is sent, the CSC can easily convert that to 4:2:2 YCrCb while relieving the scaler of this task.

In addition, the HDMI specification supports the transmission of up to eight channels of S/PDIF or I^2S audio. The audio information is packetized and transmitted during the video blanking periods along with specific information about the clock frequency. Part of this audio information (audio infoframe) tells the user how many channels of audio are being transmitted, where they should be placed, information regarding the source (make, model), and other data.

DE GENERATOR

The AD9398 has an on-board generator for DE, for start of active video (SAV), and for end of active video (EAV), all of which are necessary for describing the complete data stream for a BT656-compatible output. In addition to this particular output, it is possible to generate the DE for cases in which a scaler is not used. This signal alerts the following circuitry as to which are displayable video pixels.

4:4:4 TO 4:2:2 FILTER

The AD9398 contains a filter that allows it to convert a signal from YCrCb 4:4:4 to YCrCb 4:2:2 while maintaining the maximum accuracy and fidelity of the original signal.

Input Color Space to Output Color Space

The AD9398 can accept a wide variety of input formats and either retain that format or convert to another. Input formats supported are:

- 4:4:4 YCrCb 8-bit
- 4:2:2 YCrCb 8-, 10-, and 12-bit
- RGB 8-bit

Output modes supported are:

- 4:4:4 YCrCb 8-bit
- 4:2:2 YCrCb 8-, 10-, and 12-bit
- Dual 4:2:2 YCrCb 8-bit

Color Space Conversion (CSC) Matrix

The CSC matrix in the AD9398 consists of three identical processing channels. In each channel, three input values are multiplied by three separate coefficients. Also included are an offset value for each row of the matrix and a scaling multiple for all values. Each value has a 13-bit, twos complement resolution to ensure the signal integrity is maintained. The CSC is designed to run at speeds up to 150 MHz, supporting resolutions up to 1080p at 60 Hz. With any-to-any color space support, formats such as RGB, YUV, YCbCr, and others are supported by the CSC.

The main inputs, R_{IN}, G_{IN}, and B_{IN} come from the 8- to 12-bit inputs from each channel. These inputs are based on the input format detailed in Table 10. The mapping of these inputs to the CSC inputs is shown in Table 8.

Table 8. CSC Port Mapping

Input Channel	CSC Input Channel
R/CR	R_{IN}
Gr/Y	G_{IN}
B/CB	B_{IN}

One of the three channels is represented in Figure 6. In each processing channel, the three inputs are multiplied by three separate coefficients marked a1, a2, and a3. These coefficients are divided by 4096 to obtain nominal values ranging from −0.9998 to +0.9998. The variable labeled a4 is used as an offset control. The CSC_Mode setting is the same for all three processing channels. This multiplies all coefficients and offsets by a factor of 2^{CSC_Mode}.

The functional diagram for a single channel of the CSC, as shown in Figure 6, is repeated for the remaining G and B channels. The coefficients for these channels are b1, b2, b3, b4, c1, c2, c3, and c4.

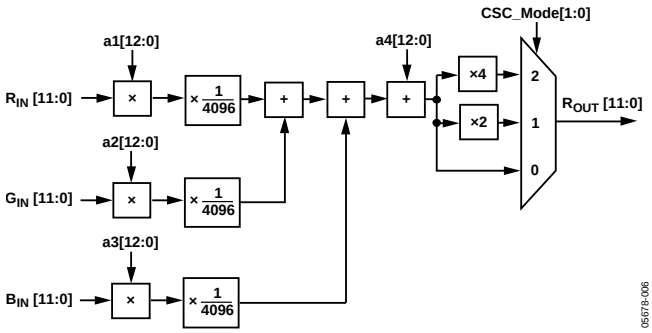

Figure 6. Single CSC Channel

A programming example and register settings for several common conversions are listed in the Color Space Converter (CSC) Common Settings section.

For a detailed functional description and more programming examples, refer to Application Note AN-795, *AD9880 Color Space Converter User's Guide*.

AUDIO PLL SETUP

Data contained in the audio infoframes, among other registers, define for the AD9398 HDMI receiver not only the type of audio, but the sampling frequency (f_S). The audio infoframe also contains information about the N and CTS values used to recreate the clock. With this information, it is possible to regenerate the audio sampling frequency. The audio clock is regenerated by dividing the 20-bit CTS value into the TMDS clock, then multiplying by the 20-bit N value. This yields a multiple of the sampling frequency of either 128 × f_S or 256 × f_S. It is possible for this to be specified up to 1024 × f_S.

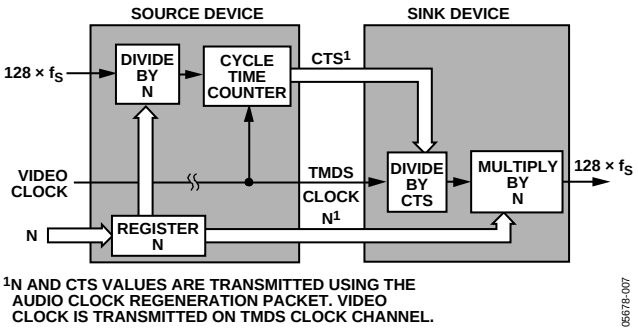

Figure 7. N and CTS for Audio Clock

In order to provide the most flexibility in configuring the audio sampling clock, an additional PLL is employed. The PLL characteristics are determined by the loop filter design, the PLL charge pump current, and the VCO range setting. The loop filter design is shown in Figure 8.

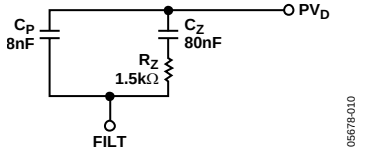

Figure 8. PLL Loop Filter Detail

To fully support all audio modes for all video resolutions up to 1080p, it is necessary to adjust certain audio-related registers from their power-on default values. Table 9 describes these registers and gives the recommended settings.

Table 9. AD9398 Audio Register Settings

Register	Bits	Recommended Setting	Function	Comments
0x01	7:0	0x00	PLL Divisor (MSBs)	The analog video PLL is also used for the audio clock circuit when in HDMI mode. This is done automatically.
0x02	7:4	0x40	PLL Divisor (LSBs)	
0x03	7:6	01	VCO Range	
	5:3	010	Charge Pump Current	
	2	1	PLL Enable	In HDMI mode, this bit enables a lower frequency to be used for audio MCLK generation.
0x34	4	0	Audio Frequency Mode Override	Allows the chip to determine the low frequency mode of the audio PLL.
0x58	7	1	PLL Enable	This enables the analog PLL to be used for audio MCLK generation.
	6:4	011	MCLK PLL Divisor	When the analog PLL is enabled for MCLK generation, another frequency divider is provided. These bits set the divisor to 4.
	3	0	N/CTS Disable	The N and CTS values should always be enabled.
	2:0	0**	MCLK Sampling Frequency	000 = 128 × f_S 001 = 256 × f_S 010 = 384 × f_S 011 = 512 × f_S

AUDIO BOARD LEVEL MUTING

The audio can be muted through the infoframes or locally via the serial bus registers. This can be controlled with Register R0x57, Bits [7:4].

AVI Infoframes

The HDMI TMDS transmission contains infoframes with specific information for the monitor such as:

- Audio information
  - 2 channels to 8 channels of audio identified
  - Audio coding
  - Audio sampling frequency
- Speaker placement
- N and CTS values (for reconstruction of the audio)
- Muting
- Source information
  - CD
  - SACD
  - DVD
- Video information
  - Video ID code (per CEA861B)
  - Color space
  - Aspect ratio
  - Horizontal and vertical bar information
  - MPEG frame information (I, B, or P frame)
- Vendor (transmitter source) name and product model

This information is the fundamental difference between DVI and HDMI transmissions and is located in read-only registers R0x5A to R0xEE. In addition to this information, registers are provided to indicate that new information has been received. Registers with addresses ending in 0xX7 or 0xXF beginning at R0x87 contain the new data flag (NDF) information. These registers contain the same information and all are reset once any of them are read. Although there is no external interrupt signal, it is very easy for the user to read any of these registers to see if there is new information to be processed.

OUTPUT DATA FORMATS

The AD9398 supports 4:4:4, 4:2:2, double data rate (DDR), and BT656 output formats. Register 0x25[3:0] controls the output mode. These modes and the pin mapping are listed in Table 10.

Table 10.

Port	Red								Green								Blue							
Bit	**7**	**6**	**5**	**4**	**3**	**2**	**1**	**0**	**7**	**6**	**5**	**4**	**3**	**2**	**1**	**0**	**7**	**6**	**5**	**4**	**3**	**2**	**1**	**0**
4:4:4	Red/Cr [7:0]								Green/Y [7:0]								Blue/Cb [7:0]							
4:2:2	CbCr [7:0]								Y [7:0]								DDR 4:2:2 ↑ CbCr ↓ Y, Y							
4:4:4 DDR	DDR ↑ [1] G [3:0]				DDR ↑ B [7:4]				DDR ↑ B [3:0]				DDR 4:2:2 ↑ CbCr [11:0]											
	DDR ↓ R [7:0]								DDR ↓ G [7:4]				DDR 4:2:2 ↓ Y,Y [11:0]											
4:2:2 to 12	CbCr [11:0]												Y [11:0]											

[1] Arrows in the table indicate clock edge. Rising edge of clock = ↑, falling edge = ↓.

2-WIRE SERIAL REGISTER MAP

The AD9398 is initialized and controlled by a set of registers that determines the operating modes. An external controller is employed to write and read the control registers through the 2-wire serial interface port.

Table 11. Control Register Map

Hex Address	Read/Write or Read Only	Bits	Default Value	Register Name	Description
0x00	Read	[7:0]	00000000	Chip Revision	Chip revision ID. Revision is read [7:4]. [3:0].
0x001	Read/Write	[7:0]	01101001	PLL Divider MSB	PLL feedback divider value MSB.
0x02	Read/Write	[7:4]	1101****	PLL Divider	PLL feedback divider value.
0x03	Read/Write	[7:6]	01******	VCO Range	VCO range.
		[5:3]	**001***	Charge Pump	Charge pump current control for PLL.
		[2]	*****0**	PLL Enable	This bit enables a lower frequency to be used for audio MCLK generation.
0x11	Read/Write	[7]	0*******	HSYNC Source	0 = HSYNC. 1 = SOG.
		[6]	*0******	HSYNC Source Override	0 = auto HSYNC source. 1 = manual HSYNC source.
		[5]	**0*****	VSYNC Source	0 = VSYNC. 1 = VSYNC from SOG.
		[4]	***0****	VSYNC Source Override	0 = auto HSYNC source. 1 = manual HSYNC source.
		[3]	****0***	Channel Select	0 = Channel 0. 1 = Channel 1.
		[2]	*****0**	Channel Select Override	0 = auto-channel select. 1 = manual channel select.
		[1]	******0*	Interface Select	0 = analog interface. 1 = digital interface.
		[0]	*******0	Interface Override	0 = auto-interface select. 1 = manual interface select.
0x12	Read/Write	[7]	1*******	Input HSYNC Polarity	0 = active low. 1 = active high.
		[6]	*0******	HSYNC Polarity Override	0 = auto HSYNC polarity. 1 = manual HSYNC polarity.
		[5]	**1*****	Input VSYNC Polarity	0 = active low. 1 = active high.
		[4]	***0****	VSYNC Polarity Override	0 = auto VSYNC polarity. 1 = manual VSYNC polarity.
0x17	Read	[3:0]	****0000	HSYNCs per VSYNC MSB	MSB of HSYNCs per VSYNC.
0x18	Read	[7:0]	00000000	HSYNCs per VSYNC	HSYNCs per VSYNC count.
0x22	Read/Write	[7:0]	4	VSYNC Duration	VSYNC duration.
0x23	Read/Write	[7:0]	32	HSYNC Duration	HSYNC duration. Sets the duration of the output HSYNC in pixel clocks.
0x24	Read/Write	[7]	1*******	HSYNC Output Polarity	Output HSYNC polarity. 0 = active low out. 1 = active high out.
		[6]	*1******	VSYNC Output Polarity	Output VSYNC polarity 0 = active low out. 1 = active high out.

Hex Address	Read/Write or Read Only	Bits	Default Value	Register Name	Description
		[5]	**1*****	DE Output Polarity	Output DE polarity. 0 = active low out. 1 = active high out.
		[4]	***1****	Field Output Polarity	Output field polarity. 0 = active low out. 1 = active high out.
		[0]	*******0	Output CLK Invert	0 = don't invert clock out. 1 = invert clock out.
0x25	Read/Write	[7:6]	01******	Output CLK Select	Select which clock to use on output pin. 1× CLK is divided down from TMDS clock input when pixel repetition is in use. 00 = ½× CLK. 01 = 1× CLK. 10 = 2× CLK. 11 = 90° phase 1× CLK.
		[5:4]	**11****	Output Drive Strength	Set the drive strength of the outputs. 00 = lowest, 11 = highest.
		[3:2]	****00**	Output Mode	Selects the data output mapping. 00 = 4:4:4 mode (normal). 01 = 4:2:2 + DDR 4:2:2 on blue. 10 = DDR 4:4:4 + DDR 4:2:2 on blue. 11 = 12-bit 4:2:2 (HDMI option only)
		[1]	******1*	Primary Output Enable	Enables primary output.
		[0]	*******0	Secondary Output Enable	Enables secondary output (DDR 4:2:2 in Output Mode 1 and Mode 2).
0x26	Read/Write	[7]	0*******	Output Three-State	Three-state the outputs.
		[5]	**0*****	SPDIF Three-State	Three-state the SPDIF output.
		[4]	***0****	I^2S Three-State	Three-state the I^2S output and the MCLK out.
		[3]	****1***	Power-Down Pin Polarity	Sets polarity of power-down pin. 0 = active low. 1 = active high.
		[2:1]	*****00*	Power-Down Pin Function	Selects the function of the power-down pin. 00 = power-down. 01 = power-down and three-state SOG. 10 = three-state outputs only. 11 = three-state outputs and SOG.
		[0]	*******0	Power-Down	0 = normal. 1 = power-down.
0x27	Read/Write	[7]	1*******	Auto Power-Down Enable	0 = disable auto low power state. 1 = enable auto low power state.
		[6]	*0******	HDCP A0	Sets the LSB of the address of the HDCP I^2C. Set to 1 only for a second receiver in a dual-link configuration. 0 = use internally generated MCLK. 1 = use external MCLK input.
		[5]	**0*****	MCLK External Enable	If an external MCLK is used, it must be locked to the video clock according to the CTS and N available in the I^2C. Any mismatch between the internal MCLK and the input MCLK results in dropped or repeated audio samples.

Hex Address	Read/Write or Read Only	Bits	Default Value	Register Name	Description
		[4]	***0****	BT656 EN	Enables EAV/SAV codes to be inserted into the video output data.
		[3]	****0***	Force DE Generation	Allows use of the internal DE generator in DVI mode.
		[2:0]	*****000	Interlace Offset	Sets the difference (in HSYNCs) in field length between Field 0 and Field 1.
0x28	Read/Write	[7:2]	011000**	VS Delay	Sets the delay (in lines) from the VSYNC leading edge to the start of active video.
		[1:0]	******01	HS Delay MSB	MSB, Register 0x29.
0x29	Read/Write	[7:0]	00000100	HS Delay	Sets the delay (in pixels) from the HSYNC leading edge to the start of active video.
0x2A	Read/Write	[3:0]	****0101	Line Width MSB	MSB, Register 0x2B.
0x2B	Read/Write	[7:0]	00000000	Line Width	Sets the width of the active video line in pixels.
0x2C	Read/Write	[3:0]	****0010	Screen Height MSB	MSB, Register 0x2D.
0x2D	Read/Write	[7:0]	11010000	Screen Height	Sets the height of the active screen in lines.
0x2E	Read/Write	[7]	0*******	Ctrl EN	Allows Ctrl [3:0] to be output on the I²S data pins.
		[6:5]	*00*****	I²S Out Mode	00 = I²S mode. 01 = right-justified. 10 = left-justified. 11 = raw IEC60958 mode.
		[4:0]	***11000	I²S Bit Width	Sets the desired bit width for right-justified mode.
0x2F	Read	[6]	*0******	TMDS Sync Detect	Detects a TMDS DE.
		[5]	**0*****	TMDS Active	Detects a TMDS clock.
		[4]	***0****	AV Mute	Gives the status of AV mute based on general control packets.
		[3]	****0***	HDCP Keys Read	Returns 1 when read of EEPROM keys is successful.
		[2:0]	*****000	HDMI Quality	Returns quality number based on DE edges.
0x30	Read	[6]	*0******	HDMI Content Encrypted	This bit is high when HDCP decryption is in use (content is protected). The signal goes low when HDCP is not being used. Use this bit to allow copying of the content. The bit should be sampled at regular intervals because it can change on a frame-by-frame basis.
		[5]	**0*****	DVI HSYNC Polarity	Returns DVI HSYNC polarity.
		[4]	***0****	DVI VSYNC Polarity	Returns DVI VSYNC polarity.
		[3:0]	****0000	HDMI Pixel Repetition	Returns current HDMI pixel repetition amount. 0 = 1×, 1 = 2×, ... The clock and data outputs automatically de-repeat by this value.
0x31	Read/Write	[7:4]	1001****	MV Pulse Max	Sets the maximum pseudo sync pulse width for Macrovision detection.
		[3:0]	****0110	MV Pulse Min	Sets the minimum pseudo sync pulse width for Macrovision detection.
0x32	Read/Write	[7]	0*******	MV Oversample En	Tells the Macrovision detection engine whether oversampling occurs.
		[6]	*0******	MV Pal En	Tells the Macrovision detection engine to enter PAL mode.
		[5:0]	**001101	MV Line Count Start	Sets the start line for Macrovision detection.
0x33	Read/Write	[7]	1*******	MV Detect Mode	0 = standard definition. 1 = progressive scan mode.
		[6]	*0******	MV Settings Override	0 = use hard-coded settings for line counts and pulse widths. 1 = use I²C values for these settings.
		[5:0]	**010101	MV Line Count End	Sets the end line for Macrovision detection.
0x34	Read/Write	[7:6]	10******	MV Pulse Limit Set	Sets the number of pulses required in the last 3 lines (SD mode only).

Hex Address	Read/Write or Read Only	Bits	Default Value	Register Name	Description
		[5]	**0*****	Low Freq Mode	Sets audio PLL to low frequency mode. Low frequency mode should only be set for pixel clocks <80 MHz.
		[4]	***0****	Low Freq Override	Allows the previous bit to be used to set low frequency mode rather than the internal auto-detect.
		[3]	****0***	Up Conversion Mode	0 = repeat Cr and Cb values. 1 = interpolate Cr and Cb values.
		[2]	*****0**	CrCb Filter Enable	Enables the FIR filter for 4:2:2 CrCb output.
		[1]	******0*	CSC_Enable	Enables the color space converter (CSC). The default settings for the CSC provide HDTV-to-RGB conversion.
					Sets the fixed point position of the CSC coefficients, including the A4, B4, C4 offsets.
0x35	Read/Write	[6:5]	*01* ****	CSC_Mode	00 = ±1.0, −4096 to +4095. 01 = ±2.0, −8192 to +8190. 1× = ±4.0, −16384 to +16380.
		[4:0]	***01100	CSC_Coeff_A1 MSB	MSB, Register 0x36.
0x36	Read/Write	[7:0]	01010010	CSC_Coeff_A1 LSB	Color space converter (CSC) coefficient for equation: $R_{OUT} = (\mathbf{A1} \times R_{IN}) + (A2 \times G_{IN}) + (A3 \times B_{IN}) + A4$ $G_{OUT} = (B1 \times R_{IN}) + (B2 \times G_{IN}) + (B3 \times B_{IN}) + B4$ $B_{OUT} = (C1 \times R_{IN}) + (C2 \times G_{IN}) + (C3 \times B_{IN}) + C4$
0x37	Read/Write	[4:0]	***01000	CSC_Coeff_A2 MSB	MSB, Register 0x38.
0x38	Read/Write	[7:0]	00000000	CSC_Coeff_A2 LSB	CSC coefficient for equation: $R_{OUT} = (A1 \times R_{IN}) + (\mathbf{A2} \times G_{IN}) + (A3 \times B_{IN}) + A4$ $G_{OUT} = (B1 \times R_{IN}) + (B2 \times G_{IN}) + (B3 \times B_{IN}) + B4$ $B_{OUT} = (C1 \times R_{IN}) + (C2 \times G_{IN}) + (C3 \times B_{IN}) + C4$
0x39	Read/Write	[4:0]	***00000	CSC_Coeff_A3 MSB	MSB, Register 0x3A.
0x3A	Read/Write	[7:0]	00000000	CSC_Coeff_A3 LSB	CSC coefficient for equation: $R_{OUT} = (A1 \times R_{IN}) + (A2 \times G_{IN}) + (\mathbf{A3} \times B_{IN}) + A4$ $G_{OUT} = (B1 \times R_{IN}) + (B2 \times G_{IN}) + (B3 \times B_{IN}) + B4$ $B_{OUT} = (C1 \times R_{IN}) + (C2 \times G_{IN}) + (C3 \times B_{IN}) + C4$
0x3B	Read/Write	[4:0]	***11001	CSC_Coeff_A4 MSB	MSB, Register 0x3C.
0x3C	Read/Write	[7:0]	11010111	CSC_Coeff_A4	CSC coefficient for equation: $R_{OUT} = (A1 \times R_{IN}) + (A2 \times G_{IN}) + (A3 \times B_{IN}) + \mathbf{A4}$ $G_{OUT} = (B1 \times R_{IN}) + (B2 \times G_{IN}) + (B3 \times B_{IN}) + B4$ $B_{OUT} = (C1 \times R_{IN}) + (C2 \times G_{IN}) + (C3 \times B_{IN}) + C4$
0x3D	Read/Write	[4:0]	***11100	CSC_Coeff_B1 MSB	MSB, Register 0x3E.
0x3E	Read/Write	[7:0]	01010100	CSC_Coeff_B1 LSB	CSC coefficient for equation: $R_{OUT} = (A1 \times R_{IN}) + (A2 \times G_{IN}) + (A3 \times B_{IN}) + A4$ $G_{OUT} = (\mathbf{B1} \times R_{IN}) + (B2 \times G_{IN}) + (B3 \times B_{IN}) + B4$ $B_{OUT} = (C1 \times R_{IN}) + (C2 \times G_{IN}) + (C3 \times B_{IN}) + C4$
0x3F	Read/Write	[4:0]	***01000	CSC_Coeff_B2 MSB	MSB, Register 0x40.
0x40	Read/Write	[7:0]	00000000	CSC_Coeff_B2 LSB	CSC coefficient for equation: $R_{OUT} = (A1 \times R_{IN}) + (A2 \times G_{IN}) + (A3 \times B_{IN}) + A4$ $G_{OUT} = (B1 \times R_{IN}) + (\mathbf{B2} \times G_{IN}) + (B3 \times B_{IN}) + B4$ $B_{OUT} = (C1 \times R_{IN}) + (C2 \times G_{IN}) + (C3 \times B_{IN}) + C4$
0x41	Read/Write	[4:0]	***11110	CSC_Coeff_B3 MSB	MSB, Register 0x42.
0x42	Read/Write	[7:0]	10001001	CSC_Coeff_B3 LSB	CSC coefficient for equation: $R_{OUT} = (A1 \times R_{IN}) + (A2 \times G_{IN}) + (A3 \times B_{IN}) + A4$ $G_{OUT} = (B1 \times R_{IN}) + (B2 \times G_{IN}) + (\mathbf{B3} \times B_{IN}) + B4$ $B_{OUT} = (C1 \times R_{IN}) + (C2 \times G_{IN}) + (C3 \times B_{IN}) + C4$
0x43	Read/Write	[4:0]	***00010	CSC_Coeff_B4 MSB	MSB, Register 0x44.

Hex Address	Read/Write or Read Only	Bits	Default Value	Register Name	Description
0x44	Read/Write	[7:0]	10010010	CSC_Coeff_B4 LSB	CSC coefficient for equation: $R_{OUT} = (A1 \times R_{IN}) + (A2 \times G_{IN}) + (A3 \times B_{IN}) + A4$ $G_{OUT} = (B1 \times R_{IN}) + (B2 \times G_{IN}) + (B3 \times B_{IN}) +$ **B4** $B_{OUT} = (C1 \times R_{IN}) + (C2 \times G_{IN}) + (C3 \times B_{IN}) + C4$
0x45	Read/Write	[4:0]	***00000	CSC_Coeff_C1 MSB	MSB, Register 0x46.
0x46	Read/Write	[7:0]	00000000	CSC_Coeff_C1 LSB	CSC coefficient for equation: $R_{OUT} = (A1 \times R_{IN}) + (A2 \times G_{IN}) + (A3 \times B_{IN}) + A4$ $G_{OUT} = (B1 \times R_{IN}) + (B2 \times G_{IN}) + (B3 \times B_{IN}) + B4$ $B_{OUT} = ($**C1** $\times R_{IN}) + (C2 \times G_{IN}) + (C3 \times B_{IN}) + C4$
0x47	Read/Write	[4:0]	***01000	CSC_Coeff_C2 MSB	MSB, Register 0x48.
0x48	Read/Write	[7:0]	00000000	CSC_Coeff_C2 LSB	CSC coefficient for equation: $R_{OUT} = (A1 \times R_{IN}) + (A2 \times G_{IN}) + (A3 \times B_{IN}) + A4$ $G_{OUT} = (B1 \times R_{IN}) + (B2 \times G_{IN}) + (B3 \times B_{IN}) + B4$ $B_{OUT} = (C1 \times R_{IN}) + ($**C2** $\times G_{IN}) + (C3 \times B_{IN}) + C4$
0x49	Read/Write	[4:0]	***01110	CSC_Coeff_C3 MSB	MSB, Register 0x4A.
0x4A	Read/Write	[7:0]	10000111	CSC_Coeff_C3 LSB	CSC coefficient for equation: $R_{OUT} = (A1 \times R_{IN}) + (A2 \times G_{IN}) + (A3 \times B_{IN}) + A4$ $G_{OUT} = (B1 \times R_{IN}) + (B2 \times G_{IN}) + (B3 \times B_{IN}) + B4$ $B_{OUT} = (C1 \times R_{IN}) + (C2 \times G_{IN}) + ($**C3** $\times B_{IN}) + C4$
0x4B	Read/Write	[4:0]	***11000	CSC_Coeff_C4 MSB	MSB, Register 0x4C.
0x4C	Read/Write	[7:0]	10111101	CSC_Coeff_C4 LSB	CSC coefficient for equation: $R_{OUT} = (A1 \times R_{IN}) + (A2 \times G_{IN}) + (A3 \times B_{IN}) + A4$ $G_{OUT} = (B1 \times R_{IN}) + (B2 \times G_{IN}) + (B3 \times B_{IN}) + B4$ $B_{OUT} = (C1 \times R_{IN}) + (C2 \times G_{IN}) + (C3 \times B_{IN}) +$ **C4**
0x50	Read/Write	[7:0]	00100000	Test	Must be written to 0x20 for proper operation.
0x56	Read/Write	[7:0]	00001111	Test	Must be written to default of 0x0F for proper operation.
0x57	Read/Write	[7]	0*******	A/V Mute Override	A1 overrides the AV mute value with Bit 6.
		[6]	*0******	AV Mute Value	Sets AV mute value if override is enabled.
		[3]	****0***	Disable Video Mute	Disables mute of video during AV mute.
		[2]	*****0**	Disable Audio Mute	Disables mute of audio during AV mute.
0x58	Read/Write	[7]		MCLK PLL Enable	MCLK PLL enable—uses analog PLL.
		[6:4]		MCLK PLL_N	MCLK PLL N [2:0]—this controls the division of the MCLK out of the PLL: 0 = /1, 1 = /2, 2 = /3, 3 = /4, and so on.
		[3]		N_CTS_Disable	Prevents the N/CTS packet on the link from writing to the N and CTS registers.
		[2:0]		MCLK FS_N	Controls the multiple of 128 f_S used for MCLK out. 0 = 128 f_S, 1 = 256 f_S, 2 = 384 f_S, 7 = 1024 f_S.
0x59	Read/Write	[6]		MDA/MCL PU	This disables the MDA/MCL pull-ups.
		[5]		CLK Term O/R	Clock termination power-down override: 0 = auto, 1 = manual.
		[4]		Manual CLK Term	Clock termination: 0 = normal, 1 = disconnected.
		[2]		FIFO Reset UF	This bit resets the audio FIFO if underflow is detected.
		[1]		FIFO Reset OF	This bit resets the audio FIFO if overflow is detected.
		[0]		MDA/MCL Three-State	This bit three-states the MDA/MCL lines.
0x5A	Read	[6:0]		Packet Detected	These 7 bits are updated if any specific packet has been received since last reset or loss of clock detect. Normal is 0x00. **Bit Data Packet Detected** 0 AVI infoframe. 1 Audio infoframe. 2 SPD infoframe. 3 MPEG source infoframe.

Hex Address	Read/Write or Read Only	Bits	Default Value	Register Name	Description
					4 ACP packets. 5 ISRC1 packets. 6 ISRC2 packets.
0x5B	Read	[3]		HDMI Mode	0 = DVI, 1 = HDMI.
0x5E	Read	[7:6] [5:3] 2 1 0		Channel Status	Mode = 00. All others are reserved. When Bit 1 = 0 (linear PCM): 000 = 2 audio channels without pre-emphasis. 001 = 2 audio channels with 50/15 µs pre-emphasis. 010 = reserved. 011 = reserved. 0 = software for which copyright is asserted. 1 = software for which no copyright is asserted. 0 = audio sample word represents linear PCM samples. 1 = audio sample word used for other purposes. 0 = consumer use of channel status block.
Audio Channel Status					
0x5F	Read	[7:0]		Channel Status Category Code	
0x60	Read	[7:4] [3:0]		Channel Number Source Number	
0x61	Read	[5:4] [3:0]		Clock Accuracy Sampling Frequency	Clock accuracy. 00 = Level II. 01 = Level III. 10 = Level I. 11 = reserved. 0011 = 32 kHz. 0000 = 44.1 kHz. 1000 = 88.2 kHz. 1100 = 176.4 kHz. 0010 = 48 kHz. 1010 = 96 kHz. 1110 = 192 kHz.
0x62	Read	[3:0]		Word Length	Word length. 0000 = not specified. 0100 = 16 bits. 0011 = 17 bits. 0010 = 18 bits. 0001 = 19 bits. 0101 = 20 bits. 1000 = not specified. 1100 = 20 bits. 1011 = 21 bits. 1010 = 22 bits. 1001 = 23 bits. 1101 = 24 bits.
0x7B	Read	[7:0]		CTS [19:12]	Cycle time stamp—this 20-bit value is used with the N value to regenerate an audio clock. For remaining bits, see Register 0x7C and Register 0x7D.
0x7C	Read	[7:0]		CTS [11:4]	
0x7D	Read Read	[7:4] [3:0]		CTS [3:0] N [19:16]	20-bit N used with CTS to regenerate the audio clock. For remaining bits, see Register 0x7E and Register 0x7F.
0x7E	Read	[7:0]		N [15:8]	

Hex Address	Read/Write or Read Only	Bits	Default Value	Register Name	Description
0x7F	Read	[7:0]		N [7:0]	
			AVI Infoframe		
0x80	Read	[7:0]		AVI Infoframe Version	
0x81	Read	[6:5]			Y [1:0] Indicates RGB, 4:2:2, or 4:4:4. 00 = RGB. 01 = YCbCr 4:2:2. 10 = YCbCr 4:4:4.
		4		Active Format Information Status	Active format information present. 0 = no data. 1 = active format information valid.
		[3:2]		Bar Information	B [1:0]. 00 = no bar information. 01 = horizontal bar information valid. 10 = vertical bar information valid. 11 = horizontal and vertical bar information valid.
		[1:0]		Scan Information	S [1:0]. 00 = no information. 01 = overscanned (television). 10 = underscanned (computer).
0x82	Read	[7:6]		Colorimetry	C [1:0]. 00 = no data. 01 = SMPTE 170M, ITU601. 10 = ITU709.
		[5:4]		Picture Aspect Ratio	M [1:0]. 00 = no data. 01 = 4:3. 10 = 16:9.
		[3:0]		Active Format Aspect Ratio	R [3:0]. 1000 = same as picture aspect ratio. 1001 = 4:3 (center). 1010 = 16:9 (center). 1011 = 14:9 (center).
0x83	Read	[1:0]		Nonuniform Picture Scaling	SC[1:0]. 00 = no known nonuniform scaling. 01 = picture has been scaled horizontally. 10 = picture has been scaled vertically. 11 = picture has been scaled horizontally and vertically.
0x84	Read	[6:0]		Video Identification Code	VIC [6:0] video identification code—refer to CEA EDID short video descriptors.
0x85	Read	[3:0]		Pixel Repeat	PR [3:0]—This specifies how many times a pixel has been repeated. 0000 = no repetition (pixel sent once). 0001 = pixel sent twice (repeated once). 0010 = pixel sent 3 times. 1001 = pixel sent 10 times. 0xA—0xF reserved.
0x86	Read	[7:0]		Active Line Start LSB	This represents the line number of the end of the top horizontal bar. If 0, there is no horizontal bar. Combines with Register 0x88 for a 16-bit value.

Hex Address	Read/Write or Read Only	Bits	Default Value	Register Name	Description
0x87	Read	[6:0]		New Data Flags	New data flags. These 8 bits are updated if any specific data changes. Normal (no NDFs) is 0x00. When any NDF register is read, all bits reset to 0x00. All NDF registers contain the same data. **Bit Data Packet Changed** 0 AVI infoframe. 1 audio infoframe. 2 SPD infoframe. 3 MPEG source infoframe. 4 ACP packets. 5 ISRC1 packets. 6 ISRC2 packets.
0x88	Read	[7:0]		Active Line Start MSB	Active line start MSB (see Register 0x86).
0x89	Read	[7:0]		Active Line End LSB	This represents the line number of the beginning of a lower horizontal bar. If greater than the number of active video lines, there is no lower horizontal bar. Combines with Register 0x8A for a 16-bit value.
0x8A	Read	[7:0]		Active Line End MSB	Active line end MSB. See Register 0x89.
0x8B	Read	[7:0]		Active Pixel Start LSB	This represents the last pixel in a vertical pillar bar at the left side of the picture. If 0, there is no left bar. Combines with Register 0x8C for a 16-bit value.
0x8C	Read	[7:0]		Active Pixel Start MSB	Active pixel start MSB. See Register 0x8B.
0x8D	Read	[7:0]		Active Pixel End LSB	This represents the first horizontal pixel in a vertical pillar-bar at the right side of the picture. If greater than the maximum number of horizontal pixels, there is no vertical bar. Combines with Register 0x8E for a16-bit value.
0x8E	Read	[7:0]		Active Pixel End MSB	Active pixel end MSB. See Register 0x8D.
0x8F	Read	[6:0]		New Data Flags	New data flags (see 0x87).
0x90	Read	[7:0]		Audio Infoframe Version	
0x91	Read	[7:4]		Audio Coding Type	CT [3:0]. Audio coding type. 0x00 = refer to stream header. 0x01 = IEC60958 PCM. 0x02 = AC3. 0x03 = MPEG1 (Layers 1 and 2). 0x04 = MP3 (MPEG1 Layer 3). 0x05 = MPEG2 (multichannel). 0x06 = AAC. 0x07 = DTS. 0x08 = ATRAC.
		[2:0]		Audio Coding Count	CC [2:0]. Audio channel count. 000 = refer to stream header. 001 = 2 channels. 010 = 3 channels. 111 = 8 channels
0x92	Read	[4:2]		Sampling Frequency	SF [2:0]. Sampling frequency. 000 = refer to stream header. 001 = 32 kHz. 010 = 44.1 kHz (CD). 011 = 48 kHz. 100 = 88.2 kHz. 101 = 96 kHz.

Hex Address	Read/Write or Read Only	Bits	Default Value	Register Name	Description
		[1:0]		Sample Size	110 = 176.4 kHz. 111 = 192 kHz. SS [1:0]. Sample size. 00 = refer to stream header. 01 = 16-bit. 10 = 20-bit. 11 = 24-bit.
0x93	Read	[7:0]		Max Bit Rate	Max bit rate (compressed audio only). The value of this field multiplied by 8 kHz represents the maximum bit rate.
0x94	Read	[7:0] 7		Speaker Mapping Down-Mix	CA [7:0]. Speaker mapping or placement for up to 8 channels. See Table 33. DM_INH—down-mix inhibit. 0 = permitted or no information. 1 = prohibited.
0x95	Read	[6:3]		Level Shift	LSV [3:0]—level shift values with attenuation information. 0000 = 0 dB attenuation. 0001 = 1 dB attenuation. . . . 1111 = 15 dB attenuation.
0x96	Read	[7:0]			Reserved.
0x97	Read	[6:0]		New Data Flags	New data flags (see 0x87).
Source Product Description (SPD) Infoframe					
0x98	Read	[7:0]		Source Product Description (SPD) Infoframe Version	
0x99	Read	[7:0]		Vender Name Character 1	Vender Name Character 1 (VN1) 7-bit ASCII code. The first of 8 characters naming the product company.
0x9A	Read	[7:0]		VN2	VN2.
0x9B	Read	[7:0]		VN3	VN3.
0x9C	Read	[7:0]		VN4	VN4.
0x9D	Read	[7:0]		VN5	VN5.
0x9E	Read	[7:0]		VN6	VN6.
0x9F	Read	[6:0]		New Data Flags	New data flags (see 0x87).
0xA0	Read	[7:0]		VN7	VN7.
0xA1	Read	[7:0]		VN8	VN8.
0xA2	Read	[7:0]		Product Description Character 1	Product Description Character 1 (PD1) 7-bit ASCII code. The first of 16 characters that contain the model number and a short description.
0xA3	Read	[7:0]		PD2	PD2.
0xA4	Read	[7:0]		PD3	PD3.
0xA5	Read	[7:0]		PD4	PD4.
0xA6	Read	[7:0]		PD5	PD5.
0xA7	Read	[7:0]		New Data Flags	New data flags (see 0x87).
0xA8	Read	[6:0]		PD6	PD6.
0xA9	Read	[7:0]		PD7	PD7.
0xAA	Read	[7:0]		PD8	PD8.
0xAB	Read	[7:0]		PD9	PD9.
0xAC	Read	[7:0]		PD10	PD10.
0xAD	Read	[7:0]		PD11	PD11.
0xAE	Read	[7:0]		PD12	PD12.

Hex Address	Read/Write or Read Only	Bits	Default Value	Register Name	Description
0xAF	Read	[6:0]		New Data Flags	New data flags (see 0x87).
0xB0	Read	[7:0]		PD13	PD13.
0xB1	Read	[7:0]		PD14	PD14.
0xB2	Read	[7:0]		PD15	PD15.
0xB3	Read	[7:0]		PD16	PD16.
0xB4	Read	[7:0]		Source Device Information Code	This code classifies the source device. 0x00 = unknown. 0x01 = digital STB. 0x02 = DVD. 0x03 = D-VHS. 0x04 = HDD video. 0x05 = DVC. 0x06 = DSC. 0x07 = video CD. 0x08 = game. 0x09 = PC general.
0xB7	Read	[6:0]		New Data Flags	New data flags (see 0x87).
MPEG Source Infoframe					
0xB8	Read	[7:0]		MPEG Source Infoframe Version	
0xB9	Read	[7:0]		MB(0)	MB[0] (lower byte of MPEG bit rate: Hz). This is the lower 8 bits of 32 bits (4 bytes) that specify the MPEG bit rate in Hz.
0xBA	Read	[7:0]		MB[1]	MB[1].
0xBB	Read	[7:0]		MB[2]	MB[2].
0xBC	Read	[7:0] 4		Field Repeat	MB[3] (upper byte). FR—new field or repeated field. 0 = new field or picture. 1 = repeated field.
0xBD	Read	[1:0]		MPEG Frame	MF[1:0] This identifies whether frame is an I, B, or P picture. 00 = unknown. 01 = I picture. 10 = B picture. 11 = P picture.
0xBE	Read	[7:0]			Reserved.
0xBF	Read	[6:0]		New Data Flags	New data flags (see 0x87).
0xC0	Read	[7:0]		Audio Content Protection Packet (ACP) Type	Audio content protection packet (ACP) type. 0x00 = generic audio. 0x01 = IEC 60958-identified audio. 0x02 = DVD-audio. 0x03 = reserved for super audio CD (SACD). 0x04 = 0xFF reserved.
0xC1	Read	[7:0]		ACP Packet Byte 0	ACP Packet Byte 0 (ACP_PB0).
0xC2	Read	[7:0]		ACP_PB1	ACP_PB1.
0xC3	Read	[7:0]		ACP_PB2	ACP_PB2.
0xC4	Read	[7:0]		ACP_PB3	ACP_PB3.
0xC5	Rea	[7:0]		ACP_PB4	ACP_PB4.
0xC6	Read	[7:0]		ACP_PB5	ACP_PB5.
0xC7	Read	[6:0]		NDF	New data flags (see 0x87).

Hex Address	Read/Write or Read Only	Bits	Default Value	Register Name	Description
0xC8		7		ISRC1 Continued	International standard recording code (ISRC1). continued. This indicates an ISRC2 packet is being transmitted.
	Read	6		ISRC1 Valid	0 = ISRC1 status bits and PBs not valid. 1 = ISRC1 status bits and PBs valid.
		[2:0]		ISRC1 Status	001 = starting position. 010 = intermediate position. 100 = final position.
0xC9	Read	[7:0]		ISRC1 Packet Byte 0	ISRC1 Packet Byte 0 (ISRC1_PB0).
0xCA	Read	[7:0]		ISRC1_PB1	ISRC1_PB1.
0xCB	Read	[7:0]		ISRC1_PB2	ISRC1_PB2.
0xCC	Read	[7:0]		ISRC1_PB3	ISRC1_PB3.
0xCD	Read	[7:0]		ISRC1_PB4	ISRC1_PB4.
0xCE	Read	[7:0]		ISRC1_PB5	ISRC1_PB5.
0xCF	Read	[6:0]		NDF	New data flags (see 0x87).
0xD0	Read	[7:0]		ISRC1_PB6	ISRC1_PB6.
0xD1	Read	[7:0]		ISRC1_PB7	ISRC1_PB7.
0xD2	Read	[7:0]		ISRC1_PB8	ISRC1_PB8.
0xD3	Read	[7:0]		ISRC1_PB9	ISRC1_PB9.
0xD4	Read	[7:0]		ISRC1_PB10	ISRC1_PB10.
0xD5	Read	[7:0]		ISRC1_PB11	ISRC1_PB11.
0xD6	Read	[7:0]		ISRC1_PB12	ISRC1_PB12.
0xD7	Read	[6:0]		NDF	New data flags (see 0x87).
0xD8	Read	[7:0]		ISRC1_PB13	ISRC1_PB13.
0xD9	Read	[7:0]		ISRC1_PB14	ISRC1_PB14.
0xDA	Read	[7:0]		ISRC1_PB15	ISRC1_PB15.
0xDB	Read	[7:0]		ISRC1_PB16	ISRC1_PB16.
0xDC	Read	[7:0]		ISRC2 Packet Byte 0	ISRC2 Packet Byte 0 (ISRC2_PB0). This is transmitted only when the ISRC_ continue bit (Register 0xC8, Bit 7) is set to 1.
0xDD	Read	[7:0]		ISRC2_PB1	ISRC2_PB1.
0xDE	Read	[7:0]		ISRC2_PB2	ISRC2_PB2.
0xDF	Read	[6:0]		New Data Flags	New data flags (see 0x87).
0xE0	Read	[7:0]		ISRC2_PB3	ISRC2_PB3.
0xE1	Read	[7:0]		ISRC2_PB4	ISRC2_PB4.
0xE2	Read	[7:0]		ISRC2_PB5	ISRC2_PB5.
0xE3	Read	[7:0]		ISRC2_PB6	ISRC2_PB6.
0xE4	Read	[7:0]		ISRC2_PB7	ISRC2_PB7.
0xE5	Read	[7:0]		ISRC2_PB8	ISRC2_PB8.
0xE6	Read	[7:0]		ISRC2_PB9	ISRC2_PB9.
0xE7	Read	[6:0]		New Data Flags	New data flags (see 0x87).
0xE8	Read	[7:0]		ISRC2_PB10	ISRC2_PB10.
0xE9	Read	[7:0]		ISRC2_PB11	ISRC2_PB11.
0xEA	Read	[7:0]		ISRC2_PB12	ISRC2_PB12.
0xEB	Read	[7:0]		ISRC2_PB13	ISRC2_PB13.
0xEC	Read	[7:0]		ISRC2_PB14	ISRC2_PB14.
0xED	Read	[7:0]		ISRC2_PB15	ISRC2_PB15.
0xEE	Read	[7:0]		ISRC2_PB16	ISRC2_PB16.

2-WIRE SERIAL CONTROL REGISTER DETAILS

CHIP IDENTIFICATION

0x00—Bits[7:0] Chip Revision

An 8-bit value that reflects the current chip revision.

0x11—Bit[7] HSYNC Source

0 = HSYNC, 1 = SOG. The power-up default is 0. These selections are ignored if Register 0x11, Bit 6 = 0.

0x11—Bit[6] HSYNC Source Override

0 = auto HSYNC source, 1 = manual HSYNC source. Manual HSYNC source is defined in Register 0x11, Bit 7. The power-up default is 0.

0x11—Bit[5] VSYNC Source

0 = VSYNC, 1 = VSYNC from SOG. The power-up default is 0. These selections are ignored if Register 0x11, Bit 4 = 0.

0x11—Bit[4] VSYNC Source Override

0 = auto VSYNC source, 1 = manual VSYNC source. Manual VSYNC source is defined in Register 0x11, Bit 5. The power-up default is 0.

0x11—Bit[3] Channel Select

0 = Channel 0, 1 = Channel 1. The power-up default is 0. These selections are ignored if Register 0x11, Bit 2 = 0.

0x11—Bit[2] Channel Select Override

0 = auto channel select, 1 = manual channel select. Manual channel select is defined in Register 0x11, Bit 3. The power-up default is 0.

0x11—Bit[1] Interface Select

0 = analog interface, 1 = digital interface. The power-up default is 0. These selections are ignored if Register 0x11, Bit 0 = 0.

0x11—Bit[0] Interface Select Override

0 = auto interface select, 1 = manual interface select. Manual interface select is defined in Register 0x11, Bit 1. The power-up default is 0.

0x12—Bit[7] Input HSYNC Polarity

0 = active low, 1 = active high. The power-up default is 1. These selections are ignored if Register 10x2, Bit 6 = 0.

0x12—Bit[6] HSYNC Polarity Override

0 = auto HSYNC polarity, 1 = manual HSYNC polarity. Manual HSYNC polarity is defined in Register 0x11, Bit 7. The power-up default is 0.

0x12—Bit[5] Input VSYNC Polarity

0 = active low, 1 = active high. The power-up default is 1. These selections are ignored if Register 0x11, Bit 4 = 0.

0x12—Bit[4] VSYNC Polarity Override

0 = auto VSYNC polarity, 1 = manual VSYNC polarity. Manual VSYNC polarity is defined in Register 0x11, Bit 5. The power-up default is 0.

0x17—Bits[3:0] HSYNCs per VSYNC MSBs

The 4 MSBs of the 12-bit counter that reports the number of HSYNCs/VSYNC on the active input. This is useful in determining the mode and aid in setting the PLL divide ratio.

0x18—Bit[7:0] HSYNCs per VSYNC LSBs

The 8 LSBs of the 12-bit counter that reports the number of HSYNCs/VSYNC on the active input.

0x21—Bit[5] VSYNC Filter Enable

The purpose of the VSYNC filter is to guarantee the position of the VSYNC edge with respect to the HSYNC edge and to generate a field signal. The filter works by examining the placement of VSYNC and regenerating a correctly placed VSYNC one line later. The VSYNC is first checked to see whether it occurs in the Field 0 position or the Field 1 position. This is done by checking the leading edge position against the sync separator threshold and the HSYNC position. The HSYNC width is divided into four quadrants with Quadrant 1 starting at the HSYNC leading edge plus a sync separator threshold. If the VSYNC leading edge occurs in Quadrant 1 or Quadrant 4, the field is set to 0 and the output VSYNC is placed coincident with the HSYNC leading edge. If the VSYNC leading edge occurs in Quadrant 2 or Quadrant 3, the field is set to 1 and the output VSYNC leading edge is placed in the center of the line. In this way, the VSYNC filter creates a predictable relative position between HSYNC and VSYNC edges at the output.

If the VSYNC occurs near the HSYNC edge, this guarantees that the VSYNC edge follows the HSYNC edge. This performs filtering also in that it requires a minimum of 64 lines between VSYNCs. The VSYNC filter cleans up extraneous pulses that might occur on the VSYNC. This should be enabled whenever the HSYNC/VSYNC count is used. Setting this bit to 0 disables the VSYNC filter. Setting this bit to 1 enables the VSYNC filter. Power-up default is 0.

0x21—Bit[4] VSYNC Duration Enable

This enables the VSYNC duration block which is designed to be used with the VSYNC filter. Setting the bit to 0 leaves the VSYNC output duration unchanged; setting the bit to 1 sets the VSYNC output duration based on Register 0x22. The power-up default is 0.

0x22—Bits[7:0] VSYNC Duration

This is used to set the output duration of the VSYNC, and is designed to be used with the VSYNC filter. This is valid only if Register 0x21, Bit 4 is set to 1. Power-up default is 4.

0x23—Bits[7:0] HSYNC Duration

An 8-bit register that sets the duration of the HSYNC output pulse. The leading edge of the HSYNC output is triggered by the internally generated, phase-adjusted PLL feedback clock. The AD9398 then counts a number of pixel clocks equal to the value in this register. This triggers the trailing edge of the HSYNC output, which is also phase-adjusted. The power-up default is 32.

0x24—Bit[7] HSYNC Output Polarity

This bit sets the polarity of the HSYNC output. Setting this bit to 0 sets the HSYNC output to active low. Setting this bit to 1 sets the HSYNC output to active high. The power-up default setting is 1.

0x24—Bit[6] VSYNC Output Polarity

This bit sets the polarity of the VSYNC output (both DVI and analog). Setting this bit to 0 sets the VSYNC output to active low. Setting this bit to 1 sets the VSYNC output to active high. Power-up default is 1.

0x24—Bit[5] Display Enable Output Polarity

This bit sets the polarity of the display enable (DE) for both DVI and analog. 0 = DE output polarity is negative. 1 = DE output polarity is positive. The power-up default is 1.

0x24—Bit[4] Field Output Polarity

This bit sets the polarity of the field output signal on Pin 21. 0 = active low = even field; active high = odd field. 1 = active low = odd field; active high = even field. The power-up default setting is 1.

0x24—Bit[0] Output Clock Invert

This bit allows inversion of the output clock as specified by Register 0x25, Bit 7 to Bit 6. 0 = noninverted clock. 1 = inverted clock. The power-up default setting is 0.

0x25—Bits[7:6] Output Clock Select

These bits select the clock output on the DATACLK pin. They include ½× clock, a 2× clock, a 90° phase shifted clock, or the normal pixel clock. The power-up default setting is 01.

Table 12. Output Clock Select

Select	Result
00	½× pixel clock
01	1× pixel clock
10	2× pixel clock
11	90° phase 1× pixel clock

0x25—Bits[5:4] Output Drive Strength

These two bits select the drive strength for all the high speed digital outputs (except VSOUT, A0, and O/E FIELD). Higher drive strength results in faster rise/fall times and in general makes it easier to capture data. Lower drive strength results in slower rise/fall times and helps to reduce EMI and digitally generated power supply noise. The power-up default setting is 11.

Table 13. Output Drive Strength

Output Drive	Result
00	Low output drive strength
01	Medium low output drive strength
10	Medium high output drive strength
11	High output drive strength

0x25—Bits[3:2] Output Mode

These bits choose between four options for the output mode, one of which is exclusive to an HDMI input. 4:4:4 mode is standard RGB; 4:2:2 mode is YCrCb, which reduces the number of active output pins from 24 to 16; 4:4:4 is double data rate (DDR) output mode; and the data is RGB mode that changes on every clock edge. The power-up default setting is 00.

Table 14. Output Mode

Output Mode	Result
00	4:4:4 RGB mode
01	4:2:2 YCrCb mode + DDR 4:2:2 on blue (secondary)
10	DDR 4:4:4: DDR mode + DDR 4:2:2 on blue (secondary)
11	12-bit 4:2:2 (HDMI option only)

0x25—Bit[1] Primary Output Enable

This bit places the primary output in active or high impedance mode. The primary output is designated when using either 4:2:2 or DDR 4:4:4. In these modes, the data on the red and green output channels is the primary output, while the output data on the blue channel (DDR YCrCb) is the secondary output. 0 = primary output is in high impedance mode. 1 = primary output is enabled. The power-up default setting is 1.

0x25—Bit[0] Secondary Output Enable

This bit places the secondary output in active or high impedance mode. The secondary output is designated when using either 4:2:2 or DDR 4:4:4. In these modes, the data on the blue output channel is the secondary output, while the output data on the red and green channels is the primary output. Secondary output is always a DDR YCrCb data mode. 0 = secondary output is in high impedance mode. 1 = secondary output is enabled. The power-up default setting is 0.

0x26—Bit[7] Output Three-State

When enabled, this bit puts all outputs (except SOGOUT) in a high impedance state. 0 = normal outputs. 1 = all outputs (except SOGOUT) in high impedance mode. The power-up default setting is 0.

0x26—Bit[5] S/PDIF Three-State

When enabled, this bit places the S/PDIF audio output pins in a high impedance state. 0 = normal S/PDIF output. 1 = S/PDIF pins in high impedance mode. The power-up default setting is 0.

0x26—Bit[4] I²S Three-State

When enabled, this bit places the I²S output pins in a high impedance state. 0 = normal I²S output. 1 = I²S pins in high impedance mode. The power-up default setting is 0.

0x26—Bit[3] Power-Down Polarity

This bit defines the polarity of the input power-down pin. 0 = power-down pin is active low. 1 = power-down pin is active high. The power-up default setting is 1.

0x26—Bits[2:1] Power-Down Pin Function

These bits define the different operational modes of the power-down pin. These bits are functional only when the power-down pin is active; when it is not active, the part is powered up and functioning. 0 = the chip is powered down and all outputs are in high impedance mode. 1 = the chip remains powered up, but all outputs are in high impedance mode. The power-up default setting is 00.

0x26—Bit[0] Power-Down

This bit is used to put the chip in power-down mode. In this mode, the power dissipation is reduced to a fraction of the typical power (see Table 1 for exact power dissipation). When in power-down, the HSOUT, VSOUT, DATACK, and all 30 of the data outputs are put into a high impedance state. Note that the SOGOUT output is not put into high impedance. Circuit blocks that continue to be active during power-down include the voltage references, sync processing, sync detection, and the serial register. These blocks facilitate a fast start-up from power-down. 0 = normal operation. 1 = power-down. The power-up default setting is 0.

0x27—Bit[7] Auto Power-Down Enable

This bit enables the chip to go into low power mode, or seek mode if no sync inputs are detected. 0 = auto power-down disabled. 1 = chip powers down if no sync inputs present. The power-up default setting is 1.

0x27—Bit[6] HDCP A0 Address

This bit sets the LSB of the address of the HDCP I²C. This should be set to 1 only for a second receiver in a dual-link configuration. The power-up default is 0.

0x27—Bit[5] MCLK External Enable

This bit enables the MCLK to be supplied externally. If an external MCLK is used, then it must be locked to the video clock according to the CTS and N available in the I²C. Any mismatch between the internal MCLK and the input MCLK results in dropped or repeated audio samples. 0 = use internally generated MCLK. 1 = use external MCLK input. The power-up default setting is 0.

BT656 GENERATION

0x27—Bit[4] BT656 Enable

This bit enables the output to be BT656 compatible with the defined start of active video (SAV) and the end of active video (EAV) controls to be inserted. These require specification of the number of active lines, active pixels per line, and delays to place these markers. 0 = disable BT656 video mode. 1 = enable BT656 video mode. The power-up default setting is 0.

0x27—Bit[3] Force DE Generation

This bit allows the use of the internal DE generator in DVI mode. 0 = internal DE generation disabled. 1 = force DE generation via programmed registers. The power-up default setting is 0.

0x27—Bits[2:0] Interlace Offset

These bits define the offset in HSYNCs from Field 0 to Field 1. The power-up default setting is 000.

0x28—Bits[7:2] VSYNC Delay

These bits set the delay (in lines) from the leading edge of VSYNC to active video. The power-up default setting is 24.

0x28—Bits[1:0] HSYNC Delay MSBs

Together with Register 0x29, these 10 bits set the delay (in pixels) from the HSYNC leading edge to the start of active video. The power-up default setting is 0x104.

0x29—Bits[7:0] HSYNC Delay LSBs

See the HSYNC Delay MSBs section.

0x2A—Bits[3:0] Line Width MSBs

Together with Register 0x2B, these 12 bits set the width of the active video line (in pixels). The power-up default setting is 0x500.

0x2B—Bits[7:0] Line Width LSBs

See the Line Width MSBs section.

0x2C—Bits[3:0] Screen Height MSBs

Along with the 8 bits following these 12 bits, set the height of the active screen (in lines). The power-up default setting is 0x2D0.

0x2D—Bits[7:0] Screen Height LSBs

See the Screen Heights MSBs section.

0x2E—Bit[7] Ctrl Enable

When set, this bit allows Ctrl [3:0] signals decoded from the DVI to be output on the I²S data pins. 0 = I²S signals on I²S lines. 1 = Ctrl[3:0] output on I²S lines. The power-up default setting is 0.

0x2E—Bits[6:5] I²S Output Mode

These bits select between four options for the I²S output: I²S, right-justified, left-justified, or raw IEC60958 mode. The power-up default setting is 00.

Table 15. I²S Output Select

I²S Output Mode	Result
00	I²S mode
01	Right-justified
10	Left-justified
11	Raw IEC60958 mode

0x2E—Bits[4:0] I²S Bit Width

These bits set the I²S bit width for right-justified mode. The power-up default setting is 24 bits.

0x2F—Bit[6] TMDS Sync Detect

This read-only bit indicates the presence of a TMDS DE. 0 = no TMDS DE present. 1 = TMDS DE detected.

0x2F—Bit[5] TMDS Active

This read-only bit indicates the presence of a TMDS clock. 0 = no TMDS clock present. 1 = TMDS clock detected.

0x2F—Bit[4] AV Mute

This read-only bit indicates the presence of AV mute based on general control packets. 0 = AV not muted. 1 = AV muted.

0x2F—Bit[3] HDCP Keys Read

This read-only bit reports if the HDCP keys were read successfully. 0 = failure to read HDCP keys. 1 = HDCP keys read.

0x2F—Bits[2:0] HDMI Quality

These read-only bits indicate a level of HDMI quality based on the DE (display enable) edges. A larger number indicates a higher quality.

0x30—Bit[6] HDMI Content Encrypted

This read-only bit is high when HDCP decryption is in use (content is protected). The signal goes low when HDCP is not being used. Customers can use this bit to determine whether to allow copying of the content. The bit should be sampled at regular intervals because it can change on a frame-by-frame basis. 0 = HDCP not in use. 1 = HDCP decryption in use.

0x30—Bit[5] DVI HSYNC Polarity

This read-only bit indicates the polarity of the DVI HSYNC. 0 = DVI HSYNC polarity is low active. 1 = DVI HSYNC polarity is high active.

0x30—Bit[4] DVI VSYNC Polarity

This read-only bit indicates the polarity of the DVI VSYNC. 0 = DVI VSYNC polarity is low active. 1 = DVI VSYNC polarity is high active.

0x30—Bits[3:0] HDMI Pixel Repetition

These read-only bits indicate the pixel repetition on DVI. 0 = 1×, 1 = 2×, 2 = 3×, up to a maximum repetition of 10× (0x9).

Table 16.

Select	Repetition Multiplier
0000	1×
0001	2×
0010	3×
0011	4×
0100	5×
0101	6×
0110	7×
0111	8×
1000	9×
1001	10×

MACROVISION

0x31—Bits[7:4] Macrovision Pulse Max

These bits set the pseudo sync pulse width maximum for Macrovision detection in pixel clocks. This is functional for 13.5 MHz SDTV or 27 MHz progressive scan. Power-up default is 9.

0x31—Bits[3:0] Macrovision Pulse Min

These bits set the pseudo sync pulse width maximum for Macrovision detection in pixel clocks. This is functional for 13.5 MHz SDTV or 27 MHz progressive scan. Power-up default is 6.

0x32—Bit[7] Macrovision Oversample Enable

Tells the Macrovision detection engine whether oversampling is used. This accommodates 27 MHz sampling for SDTV and 54 MHz sampling for progressive scan and is used as a correction factor for clock counts. Power-up default is 0.

0x32—Bit[6] Macrovision PAL Enable

Tells the Macrovision detection engine to enter PAL mode when set to 1. Default is 0 for NTSC mode.

0x32—Bit[5:0] Macrovision Line Count Start

Set the start line for Macrovision detection. Along with Register 0x33, Bits [5:0], they define the region where MV pulses are expected to occur. The power-up default is Line 13.

0x33—Bit[7] Macrovision Detect Mode

0 = standard definition. 1 = progressive scan mode.

0x33—Bit[6] Macrovision Settings Override

This defines whether preset values are used for the MV line counts and pulse widths or the values stored in I^2C registers. 0 = use hard-coded settings for line counts and pulse widths. 1 = use I^2C values for these settings.

0x33—Bits[5:0] Macrovision Line Count End

Set the end line for Macrovision detection. Along with Register 0x32, Bits[5:0], they define the region where MV pulses are expected to occur. The power-up default is Line 21.

0x34—Bits[7:6] Macrovision Pulse Limit Select

Set the number of pulses required in the last three lines (SD mode only). If there is not at least this number of MV pulses, the engine stops. These 2 bits define the following pulse counts:

00 = 6
01 = 4
10 = 5 (default)
11 = 7

0x34—Bit[5] Low Frequency Mode

Sets whether the audio PLL is in low frequency mode or not. Low frequency mode should only be set for pixel clocks < 80 MHz.

0x34—Bit[4] Low Frequency Override

Allows the previous bit to be used to set low frequency mode rather than the internal auto-detect.

0x34—Bit[3] Up Conversion Mode

0 = repeat Cb/Cr values. 1 = interpolate Cb/Cr values.

0x34—Bit[2] CbCr Filter Enable

Enables the FIR filter for 4:2:2 CbCr output.

COLOR SPACE CONVERSION

The default power-up values for the color space converter coefficients (R0x35 through R0x4C) are set for ATSC RGB-to-YCbCr conversion. They are completely programmable for other conversions.

0x34—Bit[1] Color Space Converter Enable

This bit enables the color space converter. 0 = disable color space converter. 1 = enable color space converter. The power-up default setting is 0.

0x35—Bits[6:5] Color Space Converter Mode

These two bits set the fixed-point position of the CSC coefficients, including the A4, B4, and C4 offsets.

Table 17. CSC Fixed Point Converter Mode

Select	Result
00	±1.0, −4096 to +4095
01	±2.0, −8192 to +8190
1×	±4.0, −16384 to +16380

0x35—Bits[4:0] Color Space Conversion Coefficient A1 MSBs

These 5 bits form the 5 MSBs of the Color Space Conversion Coefficient A1. This combined with the 8 LSBs of the following register form a 13-bit, twos complement coefficient that is user programmable. The equation takes the form of:

$$R_{OUT} = (A1 \times R_{IN}) + (A2 \times G_{IN}) + (A3 \times B_{IN}) + A4$$
$$G_{OUT} = (B1 \times R_{IN}) + (B2 \times G_{IN}) + (B3 \times B_{IN}) + B4$$
$$B_{OUT} = (C1 \times R_{IN}) + (C2 \times G_{IN}) + (C3 \times B_{IN}) + C4$$

The default value for the 13-bit A1 coefficient is 0x0C52.

0x36—Bits[7:0] Color Space Conversion Coefficient A1 LSBs

See the Register 0x35[4:0] section.

0x37—Bits[4:0] CSC A2 MSBs

These five bits form the 5 MSBs of the Color Space Conversion Coefficient A2. Combined with the 8 LSBs of the following register, they form a 13-bit, twos complement coefficient that is user programmable. The equation takes the form of:

$$R_{OUT} = (A1 \times R_{IN}) + (A2 \times G_{IN}) + (A3 \times B_{IN}) + A4$$
$$G_{OUT} = (B1 \times R_{IN}) + (B2 \times G_{IN}) + (B3 \times B_{IN}) + B4$$
$$B_{OUT} = (C1 \times R_{IN}) + (C2 \times G_{IN}) + (C3 \times B_{IN}) + C4$$

The default value for the 13-bit A2 coefficient is 0x0800.

0x38—Bits[7:0] CSC A2 LSBs

See the Register 0x37 section.

0x39—Bits[4:0] CSC A3 MSBs

The default value for the 13-bit A3 is 0x0000.

0x3A—Bits[7:0] CSC A3 LSBs
0x3B—Bits[4:0] CSC A4 MSBs

The default value for the 13-bit A4 is 0x19D7.

0x3C—Bits[7:0] CSC A4 LSBs
0x3D—Bits[4:0] CSC B1 MSBs

The default value for the 13-bit B1 is 0x1C54.

0x3E—Bits[7:0] CSC B1 LSBs
0x3F—Bits[4:0] CSC B2 MSB

The default value for the 13-bit B2 is 0x0800.

0x40—Bits[7:0] CSC B2 LSBs
0x41—Bits[4:0] CSC B3 MSBs

The default value for the 13-bit B3 is 0x1E89.

0x42—Bits[7:0] CSC B3 LSBs
0x43—Bits[4:0] CSC B4 MSBs

The default value for the 13-bit B4 is 0x0291.

0x44—Bits[7:0] CSC B4 LSBs
0x45—Bits[4:0] CSC C1 MSBs

The default value for the 13-bit C1 is 0x0000.

0x46—Bit[7:0] CSC C1 LSBs
0x47—Bit[4:0] CSC C2 MSBs

The default value for the 13 bit C2 is 0x0800.

0x48—Bits[7:0] CSC C2 LSBs
0x49—Bits[4:0] CSC C3 MSBs

The default value for the 13-bit C3 is 0x0E87.

0x4A—Bits[7:0] CSC C3 LSBs
0x4B—Bits[4:0] CSC C4 MSBs

The default value for the 13-bit C4 is 0x18BD.

0x4C—Bits[7:0] CSC C4 LSBs
0x57—Bit[7] AV Mute Override
0x57—Bit[6] AV Mute Value
0x57—Bit[3] Disable AV Mute
0x57—Bit[2] Disable Audio Mute
0x58—Bit[7] MCLK PLL Enable

This bit enables the use of the analog PLL.

0x58—Bits[6:4] MCLK PLL_N

These bits control the division of the MCLK out of the PLL.

Table 18.

PLL_N [2:0]	MCLK Divide Value
0	/1
1	/2
2	/3
3	/4
4	/5
5	/6
6	/7
7	/8

0x58—Bit[3] N_CTS_Disable

This bit makes it possible to prevent the N/CTS packet on the link from writing to the N and CTS registers.

0x58—Bits[2:0] MCLK f_S_N

These bits control the multiple of 128 f_S used for MCLK out.

Table 19.

MCLK f_S_N [2:0]	f_S Multiple
0	128
1	256
2	384
3	512
4	640
5	768
6	896
7	1024

0x59—Bit[6] MDA/MCL PU Disable

This bit disables the inter-MDA/MCL pull-ups.

0x59—Bit[5] CLK Term O/R

This bit allows for overriding during power down.
0 = auto, 1 = manual.

0x59—Bit[4] Manual CLK Term

This bit allows normal clock termination or disconnects this.
0 = normal, 1 = disconnected.

0x59—Bit[2] FIFO Reset UF

This bit resets the audio FIFO if underflow is detected.

0x59—Bit[1] FIFO Reset OF

This bit resets the audio FIFO if overflow is detected.

0x59—Bit[0] MDA/MCL Three-State

This bit three-states the MDA/MCL lines to allow in-circuit programming of the EEPROM.

0x5A—Bits[6:0] Packet Detect

This register indicates if a data packet in specific sections has been detected. These seven bits are updated if any specific packet has been received since last reset or loss of clock detect. Normal is 0x00.

Table 20.

Packet Detect Bit	Packet Detected
0	AVI infoframe
1	Audio infoframe
2	SPD infoframe
3	MPEG source infoframe
4	ACP packets
5	ISRC1 packets
6	ISRC2 packets

0x5B—Bit[3] HDMI Mode

0 = DVI, 1 = HDMI.

0x5E—Bits[7:6] Channel Status Mode
0x5E—Bits[5:3] PCM Audio Data
0x5E—Bit[2] Copyright Information
0x5E—Bit[1] Linear PCM Identification
0x5E—Bit[0] Use of Channel Status Block
0x5F—Bits[7:0] Channel Status Category Code
0x60—Bits[7:4] Channel Number
0x60—Bits[3:0] Source Number
0x61—Bits[5:4] Clock Accuracy
0x61—Bits[3:0] Sampling Frequency

Table 21.

Code	Frequency (kHz)
0x0	44.1
0x2	48
0x3	32
0x8	88.2
0xA	96
0xC	176.4
0xE	192

0x62—Bits[3:0] Word Length
0x7B—Bits[7:0] CTS (Cycle Time Stamp) (19:12)

These are the most significant 8 bits of a 20-bit word used in the 20-bit N term in the regeneration of the audio clock.

0x7C—Bits[7:0] CTS (11:4)
0x7D—Bits[7:4] CTS (3:0)
0x7D—Bits[3:0] N (19:16)

These are the most significant 4 bits of a 20-bit word used along with the 20-bit CTS term to regenerate the audio clock.

0x80—AVI Infoframe Version
0x81—Bits[6:5] Y[1:0]

This register indicates whether data is RGB, 4:4:4, or 4:2:2.

Table 22.

Y	Video Data
00	RGB
01	YCbCr 4:2:2
10	YCbCr 4:4:4

0x81—Bit[4] Active Format Information Present

0 = no data.1 = active format information valid.

0x81—Bits[3:2] Bar Information

Table 23.

B	Bar Type
00	No bar information
01	Horizontal bar information valid
10	Vertical bar information valid
11	Horizontal and vertical bar information valid

0x81—Bits[1:0] Scan Information

Table 24.

S [1:0]	Scan Type
00	No information
01	Overscanned (television)
10	Underscanned (computer)

0x82—Bits[7:6] Colorimetry

Table 25.

C [1:0]	Colorimetry
00	No data
01	SMPTE 170M, ITU601
10	ITU 709

0x82—Bits[5:4] Picture Aspect Ratio

Table 26.

M[1:0]	Aspect Ratio
00	No data
01	4:3
10	16:9

0x82—Bits[3:0] Active Format Aspect Ratio

Table 27.

R [3:0]	Active Format A/R
0x8	Same as picture aspect ratio (M [1:0])
0x9	4:3 (center)
0xA	16:9 (center)
0xB	14:9 (center)

0x83—Bits[1:0] Nonuniform Picture Scaling

Table 28.

SC [1:0]	Picture Scaling
00	No known nonuniform scaling
01	Has been scaled horizontally
10	Has been scaled vertically
11	Has been scaled both horizontally and vertically

0x84—Bits[6:0] Video ID Code

See CEA EDID short video descriptors.

0x85—Bits[3:0] Pixel Repeat

This value indicates how many times the pixel was repeated. 0x0 = no repeats, sent once, 0x8 = 8 repeats, sent 9 times, and so on.

0x86—Bits[7:0] Active Line Start LSB

Combined with the MSB in Register 0x88, these bits indicate the beginning line of active video. All lines before this comprise a top horizontal bar. This is used in letter box modes. If the 2-byte value is 0x00, there is no horizontal bar.

0x87—Bit[6:0] New Data Flags (NDF)

This register indicates whether data in specific sections has changed. In the address space from 0x80 to 0xFF, each register address ending in 0b111 (for example, 0x87, 0x8F, 0x97, 0xAF) is an NDF register. They all have the same data and all are reset upon reading any one of them.

Table 29.

NDF Bit Number	Changes Occurred
0	AVI infoframe
1	Audio infoframe
2	SPD infoframe
3	MPEG source infoframe
4	ACP packets
5	ISRC1 packets
6	ISRC2 packets

0x88—Bits[7:0] Active Line Start MSB

See Register 0x86.

0x89—Bits[7:0] Active Line End LSB

Combined with the MSB in Register 0x8A these bits indicate the last line of active video. All lines past this comprise a lower horizontal bar. This is used in letter-box modes. If the 2-byte value is greater than the number of lines in the display, there is no lower horizontal bar.

0x8A—Bits[7:0] Active Line End MSB

See Register 0x89.

0x8B—Bits[7:0] Active Pixel Start LSB

Combined with the MSB in Register 0x8C, these bits indicate the first pixel in the display which is active video. All pixels before this comprise a left vertical bar. If the 2-byte value is 0x00, there is no left bar.

0x8C—Bits[7:0] Active Pixel Start MSB

See Register 0x8B.

0x8D—Bits[7:0] Active Pixel End LSB

Combined with the MSB in Register 0x8E, these bits indicate the last active video pixel in the display. All pixels past this comprise a right vertical bar. If the 2-byte value is greater than the number of pixels in the display, there is no vertical bar.

0x8E—Bits[7:0] Active Pixel End MSB

See Register 0x8D.

0x8F—Bits[6:0] NDF

See Register 0x87.

0x90—Bits[7:0] Audio Infoframe Version

0x91—Bits[7:4] Audio Coding Type

These bits identify the audio coding so that the receiver may process audio properly.

Table 30.

CT [3:0]	Audio Coding
0x0	Refer to stream header
0x1	IEC60958 PCM
0x2	AC-3
0x3	MPEG1 (Layers 1 and 2)
0x4	MP3 (MPEG1 Layer 3)
0x5	MPEG2 (multichannel)
0x6	AAC
0x7	DTS
0x8	ATRAC

0x91—Bits[2:0] Audio Channel Count

These bits specify how many audio channels are being sent—2 channels to 8 channels.

Table 31.

CC [2:0]	Channel Count
000	Refer to stream header
001	2
010	3
011	4
100	5
101	6
110	7
111	8

0x92—Bits[4:2] Sampling Frequency

0x92—Bits[1:0] Ample Size

0x93—Bits[7:0] Max Bit Rate

For compressed audio only, when this value is multiplied by 8 kHz, it represents the maximum bit rate. A value of 0x08 in this field yields a maximum bit rate of (8 kHz × 8 kHz = 64 kHz).

0x94—Bits[7:0] Speaker Mapping

These bits define the suggested placement of speakers.

Table 32.

Abbreviation	Speaker Placement
FL	Front left
FC	Front center
FR	Front right
FCL	Front center left
FCR	Front center right
RL	Rear left
RC	Rear center
RR	Rear right
RCL	Rear center left
RCR	Rear center right
LFE	Low frequency effect

Table 33.

CA					Channel Number							
Bit 4	Bit 3	Bit 2	Bit 1	Bit 0	Bit 8	Bit 7	Bit 6	Bit 5	Bit 4	Bit 3	Bit 2	Bit 1
0	0	0	0	0					–	–	FR	FL
0	0	0	0	1					–	LFE	FR	FL
0	0	0	1	0					FC	–	FR	FL
0	0	0	1	1					FC	LFE	FR	FL
0	0	1	0	0				RC	–	–	FR	FL
0	0	1	0	1				RC	–	LFE	FR	FL
0	0	1	1	0				RC	FC	–	FR	FL
0	0	1	1	1				RC	FC	LFE	FR	FL
0	1	0	0	0			RR	RL	–	–	FR	FL
0	1	0	0	1			RR	RL	–	LFE	FR	FL
0	1	0	1	0			RR	RL	FC	–	FR	FL
0	1	0	1	1	–	–	RR	RL	FC	LFE	FR	FL
0	1	1	0	0	–	RC	RR	RL	–	–	FR	FL
0	1	1	0	1	–	RC	RR	RL	–	LFE	FR	FL
0	1	1	1	0	–	RC	RR	RL	FC	–	FR	FL
0	1	1	1	1	–	RC	RR	RL	FC	LFE	FR	FL
1	0	0	0	0	RRC	RLC	RR	RL	–	–	FR	FL
1	0	0	0	1	RRC	RLC	RR	RL	–	LFE	FR	FL
1	0	0	1	0	RRC	RLC	RR	RL	FC	–	FR	FL
1	0	0	1	1	RRC	RLC	RR	RL	FC	LFE	FR	FL
1	0	1	0	0	FRC	FLC	–	–	–	v	FR	FL
1	0	1	0	1	FRC	FLC	–	–	v	LFE	FR	FL
1	0	1	1	0	FRC	FLC	–	–	FC	–	FR	FL
1	0	1	1	1	FRC	FLC	–	–	FC	LFE	FR	FL
1	1	0	0	0	FRC	FLC	–	RC	–	–	FR	FL
1	1	0	0	1	FRC	FLC	–	RC	–	LFE	FR	FL
1	1	0	1	0	FRC	FLC	–	RC	FC	–	FR	FL
1	1	0	1	1	FRC	FLC	–	RC	FC	LFE	FR	FL
1	1	1	0	0	FRC	FLC	RR	RL	–	v	FR	FL
1	1	1	0	1	FRC	FLC	RR	RL	–	LFE	FR	FL
1	1	1	1	0	FRC	FLC	RR	RL	FC	–	FR	FL
1	1	1	1	1	FRC	FLC	RR	RL	FC	LFE	FR	FL

0x95—Bit[7] Down-Mix Inhibit

0x95—Bits[6:3] Level Shift Values

These bits define the amount of attenuation. The value directly corresponds to the amount of attenuation: for example, 0000 = 0 dB, 0001 = 1 dB to 1111 = 15 dB attenuation.

0x96—Bits[7:0] Reserved

0x97—Bits[6:0] New Data Flags

See Register 0x87 for a description.

0x98—Bits[7:0] Source Product Description (SPD) Infoframe Version

0x99—Bits[7:0] Vender Name Character 1 (VN1)

This is the first character in eight that is the name of the company that appears on the product. The data characters are 7-bit ASCII code.

0x9A—Bits[7:0] VN2

0x9B—Bits[7:0] VN3

0x9C—Bits[7:0] VN4

0x9D—Bits[7:0] VN5

0x9E—Bits[7:0] VN6

0x9F—Bits[6:0] New Data Flags

See Register 0x87 for a description.

0xA0—Bits[7:0] VN7

0xA1—Bits[7:0] VN8

0xA2—Bits[7:0] Product Description Character 1 (PD1)

This is the first character of 16 that contain the model number and a short description of the product. The data characters are 7-bit ASCII code.

0xA3—Bits[7:0] PD2

0xA4—Bits[7:0] PD3

0xA5—Bits[7:0] PD4

0xA6—Bits[7:0] PD5

0xA7—Bits[6:0] New Data Flags

See Register 0x87 for a description.

0xA8—Bits[7:0] PD6

0xA9—Bits[7:0] PD7

0xAA—Bits[7:0] PD8

0xAB—Bits[7:0] PD9

0xAC—Bits[7:0] PD10

0xAD—Bits[7:0] PD11

0xAE—Bits[7:0] PD12

0xAF—Bits[6:0] New Data Flags

See Register 0x87 for a description.

0xB0—Bits[7:0] PD13

0xB1—Bits[7:0] PD14

0xB2—Bits[7:0] PD15

0xB3—Bits[7:0] PD16

0xB4—Bits[7:0] Source Device Information Code

These bytes classify the source device.

Table 34.

SDI Code	Source
0x00	Unknown
0x01	Digital STB
0x02	DVD
0x03	D-VHS
0x04	HDD video
0x05	DVC
0x06	DSC
0x07	Video CD
0x08	Game
0x09	PC general

0xB7—Bits[6:0] New Data Flags

See Register 0x87 for a description.

0xB8—Bits[7:0] MPEG Source Infoframe Version

0xB9—Bits[7:0] MPEG Bit Rate Byte 0 (MB0)

This is the lower 8 bits of 32 bits that specify the MPEG bit rate in Hz.

0xBA—Bits[7:0] MB1

0xBB—Bits[7:0] MB2

0xBC—Bits[7:0] MB3—Upper Byte

0xBD—Bit[4] Field Repeat

This defines whether the field is new or repeated. 0 = new field or picture. 1 = repeated field.

0xBD—Bits[1:0] MPEG Frame

This identifies the frame as I, B, or P.

Table 35.

MF[1:0]	Frame Type
00	Unknown
01	I—picture
10	B—picture
11	P—picture

0xBE—Bits[7:0] Reserved

0xBF—Bits[6:0] New Data Flags

See Register 0x87 for a description.

0xC0—Bits[7:0] Audio Content Protection Packet (ACP Type)

These bits define which audio content protection is used.

Table 36.

Code	ACP Type
0x00	Generic audio
0x01	IEC 60958-identified audio
0x02	DVD-audio
0x03	Reserved for super audio CD (SACD)
0x04—0xFF	Reserved

0xC1—ACP Packet Byte 0 (ACP_PB0)

0xC2—Bits[7:0] ACP_PB1

0xC3—Bits[7:0] ACP_PB2

0xC4—Bits[7:0] ACP_PB3

0xC5—Bits[7:0] ACP_PB4

0xC7—Bits[6:0] New Data Flags

See Register 0x87 for a description.

0xC8—Bit[7] International Standard Recording Code (ISRC1) Continued

This bit indicates that a continuation of the 16 ISRC1 packet bytes (an ISRC2 packet) is being transmitted.

0xC8—Bit[6] ISRC1 Valid

This bit is an indication of the whether ISRC1 packet bytes are valid. 0 = ISRC1 status bits and PBs not valid. 1 = ISRC1 status bits and PBs valid.

0xC8] 2:0] ISRC Status

These bits define where in the ISRC track the samples are: at least two transmissions of 001 occur at the beginning of the track, while continuous transmission of 010 occurs in the middle of the track, followed by at least two transmissions of 100 near the end of the track.

0xC9—Bits[7:0] ISRC1 Packet Byte 0 (ISRC1_PB0)
0xCA—Bits[7:0] ISRC1_PB1
0xCB—Bits[7:0] ISRC1_PB2
0xCC—Bits[7:0] ISRC1_PB3
0xCD—Bits[7:0] ISRC1_PB4
0xCE—Bits[7:0] ISRC1_PB5
0xCF—Bits[6:0] New Data Flags

See Register 0x87 for a description.

0xD0—Bits[7:0] ISRC1_PB6
0xD1—Bits[7:0] ISRC1_PB7
0xD2—Bits[7:0] ISRC1_PB8
0xD3—Bits[7:0] ISRC1_PB9
0xD4—Bits[7:0] ISRC1_PB10
0xD5—Bits[7:0] ISRC1_PB11
0xD6—Bits[7:0] ISRC1_PB12
0xD7—Bits[6:0] New Data Flags

See Register 0x87 for a description.

0xD8—Bits[7:0] ISRC1_PB13
0xD9—Bits[7:0] ISRC1_PB14
0xDA—Bits[7:0] ISRC1_PB15
0xDB—Bits[7:0] ISRC1_PB16
0xDC—Bits[7:0] ISRC2 Packet Byte 0 (ISRC2_PB0)

This is transmitted only when the ISRC continue bit (Register 0xC8 Bit 7) is set to 1.

0xDD—Bits[7:0] ISRC2_PB1
0xDE—Bits[7:0] ISRC2_PB2
0xDF—Bits[6:0] New Data Flags

See Register 0x87 for a description.

0xE0—Bits[7:0] ISRC2_PB3
0xE1—Bits[7:0] ISRC2_PB4
0xE2—Bits[7:0] ISRC2_PB5
0xE3—Bits[7:0] ISRC2_PB6
0xE4—Bits[7:0] ISRC2_PB7
0xE5—Bits[7:0] ISRC2_PB8
0xE6—Bits[7:0] ISRC2_PB9
0xE7—Bits[6:0] New Data Flags

See Register 0x87 for a description.

0xE8—Bits[7:0] ISRC2_PB10
0xE9—Bits[7:0] ISRC2_PB11
0xEA—Bits[7:0] ISRC2_PB12
0xEB—Bits[7:0] ISRC2_PB13
0xEC—Bits[7:0] ISRC2_PB14
0xED—Bits[7:0] ISRC2_PB15
0xEE—Bits[7:0] ISRC2_PB16

2-WIRE SERIAL CONTROL PORT

A 2-wire serial interface control interface is provided in the AD9398. Up to two AD9398 devices can be connected to the 2-wire serial interface, with a unique address for each device.

The 2-wire serial interface comprises a clock (SCL) and a bidirectional data (SDA) pin. The analog flat panel interface acts as a slave for receiving and transmitting data over the serial interface. When the serial interface is not active, the logic levels on SCL and SDA are pulled high by external pull-up resistors.

Data received or transmitted on the SDA line must be stable for the duration of the positive-going SCL pulse. Data on SDA must change only when SCL is low. If SDA changes state while SCL is high, the serial interface interprets that action as a start or stop sequence.

There are six components to serial bus operation:

- Start signal
- Slave address byte
- Base register address byte
- Data byte to read or write
- Stop signal
- Acknowledge (Ack)

When the serial interface is inactive (SCL and SDA are high), communications are initiated by sending a start signal. The start signal is a high-to-low transition on SDA while SCL is high. This signal alerts all slave devices that a data transfer sequence is coming.

The first 8 bits of data transferred after a start signal comprise a 7-bit slave address (the first 7 bits) and a single R/$\overline{W}$ bit (the 8th bit). The R/$\overline{W}$ bit indicates the direction of data transfer, read from (1) or write to (0) the slave device. If the transmitted slave address matches the address of the device (set by the state of the SA0 input pin as shown in Table 37), the AD9398 acknowledges by bringing SDA low on the 9th SCL pulse. If the addresses do not match, the AD9398 does not acknowledge.

Table 37. Serial Port Addresses

Bit 7	Bit 6	Bit 5	Bit 4	Bit 3	Bit 2	Bit 1
A_6 (MSB)	A_5	A_4	A_3	A_2	A_1	A_0
1	0	0	1	1	0	0

DATA TRANSFER VIA SERIAL INTERFACE

For each byte of data read or written, the MSB is the first bit of the sequence.

If the AD9398 does not acknowledge the master device during a write sequence, the SDA remains high so the master can generate a stop signal. If the master device does not acknowledge the AD9398 during a read sequence, the AD9398 interprets this as the end of data. The SDA remains high, so the master can generate a stop signal.

To write data to specific control registers of the AD9398, the 8-bit address of the control register of interest must be written after the slave address has been established. This control register address is the base address for subsequent write operations. The base address auto-increments by 1 for each byte of data written after the data byte intended for the base address. If more bytes are transferred than there are available addresses, the address does not increment and remains at its maximum value. Any base address higher than the maximum value does not produce an acknowledge signal.

Data are read from the control registers of the AD9398 in a similar manner. Reading requires two data transfer operations:

- The base address must be written with the R/W bit of the slave address byte low to set up a sequential read operation.
- Reading (the R/$\overline{W}$ bit of the slave address byte high) begins at the previously established base address. The address of the read register auto-increments after each byte is transferred.

To terminate a read/write sequence to the AD9398, a stop signal must be sent. A stop signal comprises a low-to-high transition of SDA while SCL is high.

A repeated start signal occurs when the master device driving the serial interface generates a start signal without first generating a stop signal to terminate the current communication. This is used to change the mode of communication (read, write) between the slave and master without releasing the serial interface lines.

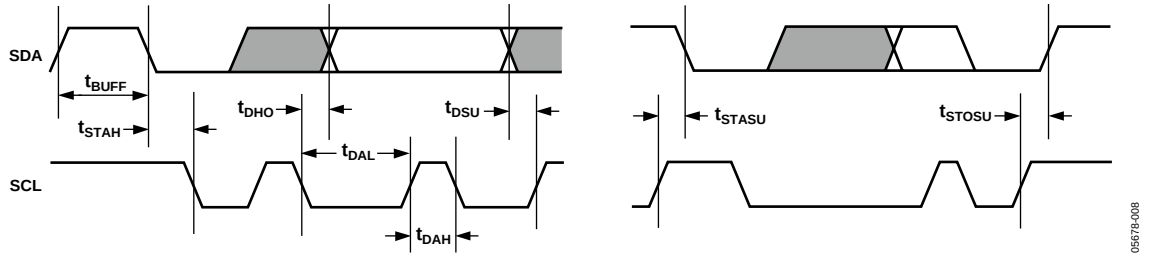

Figure 9. Serial Port Read/Write Timing

SERIAL INTERFACE READ/WRITE EXAMPLES

Write to one control register:

- Start signal
- Slave address byte (R/$\overline{W}$ bit = low)
- Base address byte
- Data byte to base address
- Stop signal

Write to four consecutive control registers:

- Start signal
- Slave address byte (R/$\overline{W}$ bit = LOW)
- Base address byte
- Data byte to base address
- Data byte to (base address + 1)
- Data byte to (base address + 2)
- Data byte to (base address + 3)
- Stop signal

Read from one control register:

- Start signal
- Slave address byte (R/$\overline{W}$ bit = low)
- Base address byte
- Start signal
- Slave address byte (R/$\overline{W}$ bit = high)
- Data byte from base address
- Stop signal

Read from four consecutive control registers:

- Start signal
- Slave address byte (R/$\overline{W}$ bit = low)
- Base address byte
- Start signal
- Slave address byte (R/$\overline{W}$ bit = high)
- Data byte from base address
- Data byte from (base address + 1)
- Data byte from (base address + 2)
- Data byte from (base address + 3)
- Stop signal

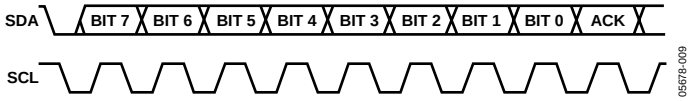

Figure 10. Serial Interface—Typical Byte Transfer

PCB LAYOUT RECOMMENDATIONS

The AD9398 is a high precision, high speed digital device. To achieve the maximum performance from the part, it is important to have a well designed board. The following is a guide for designing a board using the AD9398.

POWER SUPPLY BYPASSING

It is recommended to bypass each power supply pin with a 0.1 µF capacitor. The exception is in the case where two or more supply pins are adjacent to each other. For these groupings of powers/grounds, it is only necessary to have one bypass capacitor. The fundamental idea is to have a bypass capacitor within about 0.5 cm of each power pin. Also, avoid placing the capacitor on the opposite side of the PC board from the AD9398, since that interposes resistive vias in the path.

The bypass capacitors should be physically located between the power plane and the power pin. Current should flow from the power plane to the capacitor to the power pin. Do not make the power connection between the capacitor and the power pin. Placing a via underneath the capacitor pads down to the power plane is generally the best approach.

It is particularly important to maintain low noise and good stability of PV_{DD} (the clock generator supply). Abrupt changes in PV_{DD} can result in similarly abrupt changes in sampling clock phase and frequency. This can be avoided by careful attention to regulation, filtering, and bypassing. It is highly desirable to provide separate regulated supplies for each of the analog circuitry groups (V_D and PV_{DD}).

Some graphic controllers use substantially different levels of power when active (during active picture time) and when idle (during HSYNC and VSYNC periods). This can result in a measurable change in the voltage supplied to the analog supply regulator, which can in turn produce changes in the regulated analog supply voltage. This is mitigated by regulating the analog supply, or at least PV_{DD}, from a different, cleaner power source (for example, from a 12 V supply).

It is recommended to use a single ground plane for the entire board. Experience has repeatedly shown that noise performance is the same or better with a single ground plane. Using multiple ground planes is detrimental because each separate ground plane is smaller, resulting in long ground loops.

In some cases, using separate ground planes is unavoidable; therefore, it is recommended to place a single ground plane under the AD9398. The location of the split should be at the receiver of the digital outputs. In this case, it is even more important to place components wisely because the current loops are much longer (current takes the path of least resistance). An example of a current loop is: power plane to AD9398 to digital output trace to digital data receiver to digital ground plane to analog ground plane .

OUTPUTS (BOTH DATA AND CLOCKS)

Try to minimize the trace length that the digital outputs have to drive. Longer traces have higher capacitance requiring more current that causes more internal digital noise.

Shorter traces reduce the possibility of reflections.

Adding a 50 Ω to 200 Ω series resistor suppresses reflections, reduces EMI, and reduces the current spikes inside the AD9398. If series resistors are used, place them as close as possible to the AD9398 pins (although try not to add vias or extra length to the output trace to move the resistors closer).

If possible, limit the capacitance that each of the digital outputs drives to less than 10 pF. This is easily accomplished by keeping traces short and connecting the outputs to only one device. Loading the outputs with excessive capacitance increases the current transients inside the AD9398 and creates more digital noise on its power supplies.

DIGITAL INPUTS

The digital inputs on the AD9398 are designed to work with 3.3 V signals, but tolerate 5.0 V signals. Therefore, no extra components need to be added if using 5.0 V logic.

Any noise that enters the HSYNC input trace adds jitter to the system. Therefore, minimize the trace length and do not run any digital or other high frequency traces near it.

COLOR SPACE CONVERTER (CSC) COMMON SETTINGS

Table 38. HDTV YCrCb (0 to 255) to RGB (0 to 255) (Default Setting for AD9398)

Register	Red/Cr Coeff 1		Red/Cr Coeff 2		Red/Cr Coeff 3		Red/Cr Offset	
Address	0x35	0x36	0x37	0x38	0x39	0x3A	0x3B	0x3C
Value	0x0C	0x52	0x08	0x00	0x00	0x00	0x19	0xD7
Register	**Green/Y Coeff 1**		**Green/Y Coeff 2**		**Green/Y Coeff 3**		**Green/Y Offset**	
Address	0x3D	0x3E	0x3F	0x40	0x41	0x42	0x43	0x44
Value	0x1C	0x54	0x08	0x00	0x3E	0x89	0x02	0x91
Register	**Blue/Cb Coeff 1**		**Blue/Cb Coeff 2**		**Blue/Cb Coeff 3**		**Blue/Cb Offset**	
Address	0x45	0x46	0x47	0x48	0x49	0x4A	0x4B	0x4C
Value	0x00	0x00	0x08	0x00	0x0E	0x87	0x18	0xBD

Table 39. HDTV YCrCb (16 to 235) to RGB (0 to 255)

Register	Red/Cr Coeff 1		Red/Cr Coeff 2		Red/Cr Coeff 3		Red/Cr Offset	
Address	0x35	0x36	0x37	0x38	0x39	0x3A	0x3B	0x3C
Value	0x47	0x2C	0x04	0xA8	0x00	0x00	0x1C	0x1F
Register	**Green/Y Coeff 1**		**Green/Y Coeff 2**		**Green/Y Coeff 3**		**Green/Y Offset**	
Address	0x3D	0x3E	0x3F	0x40	0x41	0x42	0x43	0x44
Value	0x1D	0xDD	0x04	0xA8	0x1F	0x26	0x01	0x34
Register	**Blue/Cb Coeff 1**		**Blue/Cb Coeff 2**		**Blue/Cb Coeff 3**		**Blue/Cb Offset**	
Address	0x45	0x46	0x47	0x48	0x49	0x4A	0x4B	0x4C
Value	0x00	0x00	0x04	0xA8	0x08	0x 75	0x1B	0x7B

Table 40. SDTV YCrCb (0 to 255) to RGB (0 to 255)

Register	Red/Cr Coeff 1		Red/Cr Coeff 2		Red/Cr Coeff 3		Red/Cr Offset	
Address	0x35	0x36	0x37	0x38	0x39	0x3A	0x3B	0x3C
Value	0x2A	0xF8	0x08	0x00	0x00	0x00	0x1A	0x84
Register	**Green/Y Coeff 1**		**Green/Y Coeff 2**		**Green/Y Coeff 3**		**Green/Y Offset**	
Address	0x3D	0x3E	0x3F	0x40	0x41	0x42	0x43	0x44
Value	0x1A	0x6A	0x08	0x00	0x1D	0x50	0x04	0x23
Register	**Blue/Cb Coeff. 1**		**Blue/Cb Coeff 2**		**Blue/Cb Coeff 3**		**Blue/Cb Offset**	
Address	0x45	0x46	0x47	0x48	0x49	0x4A	0x4B	0x4C
Value	0x00	0x00	0x08	0x00	0x0D	0xDB	0x19	0x12

Table 41. SDTV YCrCb (16 to 235) to RGB (0 to 255)

Register	Red/Cr Coeff 1		Red/Cr Coeff 2		Red/Cr Coeff 3		Red/Cr Offset	
Address	0x35	0x36	0x37	0x38	0x39	0x3A	0x3B	0x3C
Value	0x46	0x63	0x04	0xA8	0x00	0x00	0x1C	0x84
Register	**Green/Y Coeff 1**		**Green/Y Coeff 2**		**Green/Y Coeff 3**		**Green/Y Offset**	
Address	0x3D	0x3E	0x3F	0x40	0x41	0x42	0x43	0x44
Value	0x1C	0xC0	0x04	0xA8	0x1E	0x6F	0x02	0x1E
Register	**Blue/Cb Coeff 1**		**Blue/Cb Coeff 2**		**Blue/Cb Coeff 3**		**Blue/Cb Offset**	
Address	0x45	0x46	0x47	0x48	0x49	0x4A	0x4B	0x4C
Value	0x00	0x00	0x04	0xA8	0x08	0x11	0x1B	0xAD

Table 42. RGB (0 to 255) to HDTV YCrCb (0 to 255)

Register	Red/Cr Coeff 1		Red/Cr Coeff 2		Red/Cr Coeff		Red/Cr Offset	
Address	0x35	0x36	0x37	0x38	0x39	0x3A	0x3B	0x3C
Value	0x08	0x2D	0x18	0x93	0x1F	0x3F	0x08	0x00
Register	**Green/Y Coeff 1**		**Green/Y Coeff 2**		**Green/Y Coeff 3**		**Green/Y Offset**	
Address	0x3D	0x3E	0x3F	0x40	0x41	0x42	0x43	0x44
Value	0x03	0x68	0x0B	0x71	0x01	0x27	0x00	0x00
Register	**Blue/Cb Coeff 1**		**Blue/Cb Coeff 2**		**Blue/Cb Coeff 3**		**Blue/Cb Offset**	
Address	0x45	0x46	0x47	0x48	0x49	0x4A	0x4B	0x4C
Value	0x1E	0x21	0x19	0xB2	0x08	0x2D	0x08	0x00

Table 43. RGB (0 to 255) to HDTV YCrCb (16 to 235)

Register	Red/Cr Coeff 1		Red/Cr Coeff 2		Red/Cr Coeff 3		Red/Cr Offset	
Address	0x35	0x36	0x37	0x38	0x39	0x3A	0x3B	0x3C
Value	0x07	0x06	0x19	0xA0	0x1F	0x5B	0x08	0x00
Register	**Green/Y Coeff 1**		**Green/Y Coeff 2**		**Green/Y Coeff 3**		**Green/Y Offset**	
Address	0x3D	0x3E	0x3F	0x40	0x41	0x42	0x43	0x44
Value	0x02	0xED	0x09	0xD3	0x00	0xFD	0x01	0x00
Register	**Blue/Cb Coeff 1**		**Blue/Cb Coeff 2**		**Blue/Cb Coeff 3**		**Blue/Cb Offset**	
Address	0x45	0x46	0x47	0x48	0x49	0x4A	0x4B	0x4C
Value	0x1E	0x64	0x1A	0x96	0x07	0x06	0x08	0x00

Table 44. RGB (0 to 255) to SDTV YCrCb (0 to 255)

Register	Red/Cr Coeff 1		Red/Cr Coeff 2		Red/Cr Coeff 3		Red/Cr Offset	
Address	0x35	0x36	0x37	0x38	0x39	0x3A	0x3B	0x3C
Value	0x08	0x2D	0x19	0x27	0x1E	0xAC	0x08	0x00
Register	**Green/Y Coeff 1**		**Green/Y Coeff 2**		**Green/Y Coeff 3**		**Green/Y Offset**	
Address	0x3D	0x3E	0x3F	0x40	0x41	0x42	0x43	0x44
Value	0x04	0xC9	0x09	0x64	0x01	0xD3	0x00	0x00
Register	**Blue/Cb Coeff 1**		**Blue/Cb Coeff 2**		**Blue/Cb Coeff 3**		**Blue/Cb Offset**	
Address	0x45	0x46	0x47	0x48	0x49	0x4A	0x4B	0x4C
Value	0x1D	0x3F	0x1A	0x93	0x08	0x2D	0x08	0x00

Table 45. RGB (0 to 255) to SDTV YCrCb (16 to 235)

Register	Red/Cr Coeff 1		Red/Cr Coeff 2		Red/Cr Coeff 3		Red/Cr Offset	
Address	0x35	0x36	0x37	0x38	0x39	0x3A	0x3B	0x3C
Value	0x07	0x06	0x1A	0x1E	0x1E	0xDC	0x08	0x00
Register	**Green/Y Coeff 1**		**Green/Y Coeff 2**		**Green/Y Coeff 3**		**Green/Y Offset**	
Address	0x3D	0x3E	0x3F	0x40	0x41	0x42	0x43	0x44
Value	0x04	0x1C	0x08	0x11	0x01	0x91	0x01	0x00
Register	**Blue/Cb Coeff 1**		**Blue/Cb Coeff 2**		**Blue/Cb Coeff 3**		**Blue/Cb Offset**	
Address	0x45	0x46	0x47	0x48	0x49	0x4A	0x4B	0x4C
Value	0x1D	0xA3	0x1B	0x57	0x07	0x06	0x08	0x00

OUTLINE DIMENSIONS

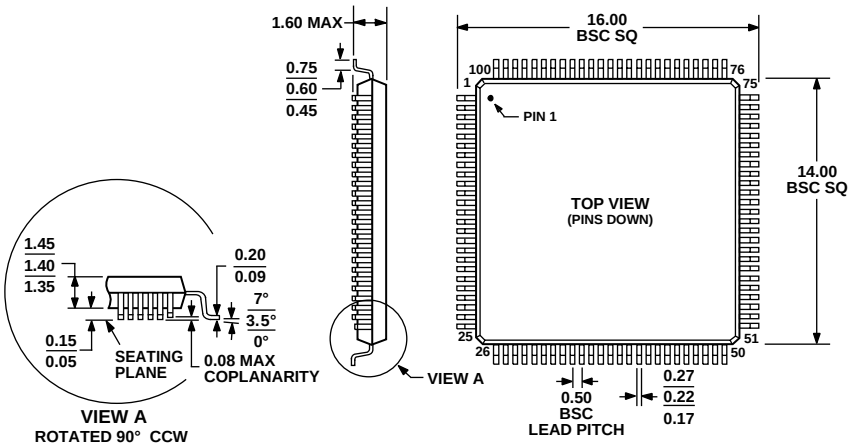

COMPLIANT TO JEDEC STANDARDS MS-026-BED

Figure 11. 100-Lead Low Profile Quad Flat Package [LQFP]
(ST-100)
Dimensions shown in millimeters

ORDERING GUIDE

Model	Max Speed (MHz)		Temperature Range	Package Description	Package Option
	Analog	Digital			
AD9398KSTZ-100[1]	100	100	0°C to 70°C	100-Lead Low Profile Quad Flat Package (LQFP)	ST-100
AD9398KSTZ-150	150	150	0°C to 70°C	100-Lead Low Profile Quad Flat Package (LQFP)	ST-100
AD9398/PCB				Evaluation Board	

[1] Z = Pb-free part.

NOTES

NOTES

NOTES

© 2005 Analog Devices, Inc. All rights reserved. Trademarks and registered trademarks are the property of their respective owners.
D05678-0-10/05(0)