Precision Integrated Analog Front End, Controller, and PWM for Battery Test and Formation Systems

Data Sheet **AD8452**

FEATURES

- CC and CV battery test and formation modes with transparent and automatic switchover, for systems of 20 Ah or less
- Precise measurement of voltage and current
- Independent feedback control blocks
- Highly accurate, factory trimmed instrumentation and differential amplifiers
  - In-amp for current sense gain: 66 V/V
  - Difference amplifier for voltage sense gain: 0.4 V/V
- Stable over temperature: offset voltage drift <0.6 µV/°C (maximum)
- Gain drift: <3 ppm/°C (maximum)
- Current sense CMRR: 120 dB minimum
- Popular SMPS control for charge/discharge
- High PWM linearity with internal ramp voltage
- 50 kHz to 300 kHz user controlled switching frequency
- Synchronization output or input with adjustable phase shift
- Programmable soft start

APPLICATIONS

- Battery formation and testing
- High efficiency battery test systems with recycle capability
- Battery conditioning (charging and discharging) systems

GENERAL DESCRIPTION

The AD8452 combines a precision analog front-end controller and switch mode power supply (SMPS), pulse-width modulator (PWM) driver into a single silicon platform for high volume battery testing and formation manufacturing. A precision instrumentation amplifier (in-amp) measures the battery charge/discharge current, while an equally accurate difference amplifier measures the battery voltage. Internal laser trimmed resistor networks establish the in-amp and difference amplifier gains (66 V/V and 0.4 V/V, respectively), and stabilize the AD8452 performance across the rated operating temperature range.

Desired battery cycling current and voltage levels are established by applying precise control voltages to the ISET and VSET inputs. Actual charge and discharge current levels are sensed (usually by a high power, highly accurate shunt resistor) whose value is carefully selected according to system parameters. Switching between constant current (CC) and constant voltage (CV) loop integration is instantaneous, automatic, and completely transparent to the observer. A logic high at the MODE input selects the charge or discharge mode (high for charge, low for discharge).

The AD8452 simplifies designs by providing excellent performance, functionality, and overall reliability in a space saving 48-lead, 7 mm × 7 mm × 1.4 mm LQFP package rated for operation at temperatures from −40°C to +85°C.

FUNCTIONAL BLOCK DIAGRAM

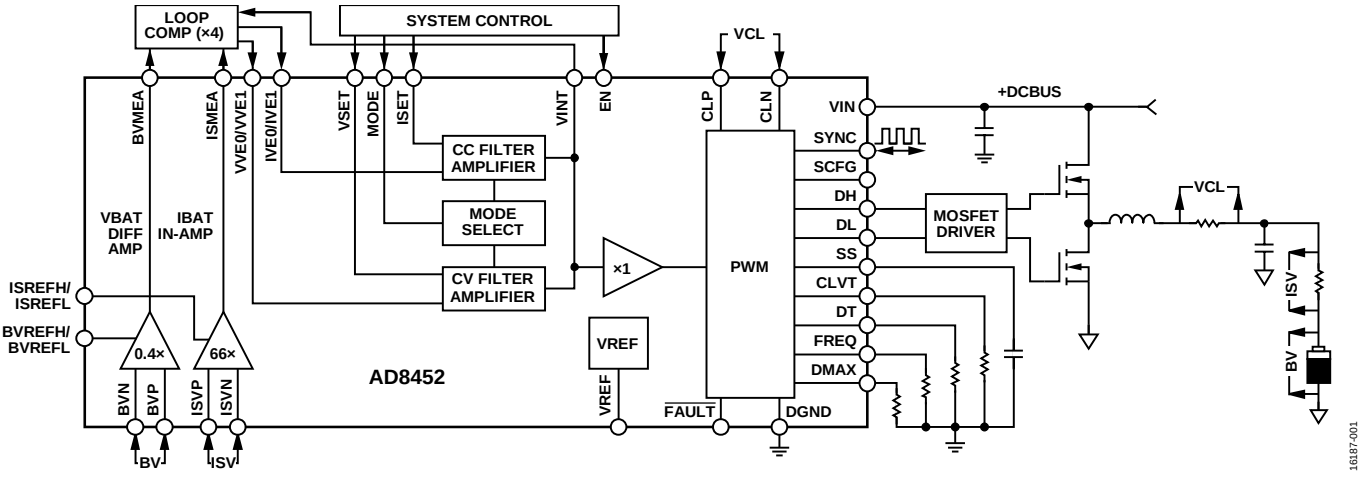

Figure 1.

Information furnished by Analog Devices is believed to be accurate and reliable. However, no responsibility is assumed by Analog Devices for its use, nor for any infringements of patents or other rights of third parties that may result from its use. Specifications subject to change without notice. No license is granted by implication or otherwise under any patent or patent rights of Analog Devices. Trademarks and registered trademarks are the property of their respective owners.

One Technology Way, P.O. Box 9106, Norwood, MA 02062-9106, U.S.A.
Tel: 781.329.4700 ©2017–2018 Analog Devices, Inc. All rights reserved.
Technical Support www.analog.com

TABLE OF CONTENTS

Features ... 1
Applications ... 1
General Description ... 1
Functional Block Diagram ... 1
Revision History ... 2
Specifications ... 3
Analog Front-End and Controller Specifications ... 3
Pulse-Width Modulator Specifications ... 5
Digital Interface Specifications ... 6
Power Supply ... 7
Temperature Range Specifications ... 7
Absolute Maximum Ratings ... 8
Thermal Resistance ... 8
ESD Caution ... 8
Pin Configuration and Function Descriptions ... 9
Typical Performance Characteristics ... 11
In-Amp Characteristics ... 11
Difference Amplifier Characteristics ... 12
CC and CV Loop Filter Amplifiers and VSET Buffer (except where Noted) ... 13
Reference Characteristics ... 15
Pulse-Width Modulator ... 16
Theory of Operation ... 18
Introduction ... 18
Instrumentation Amplifier (In-Amp) ... 19
Difference Amplifier ... 20
CC and CV Loop Filter Amplifiers ... 20
Charge and Discharge Control ... 23
Input and Output Supply Pins ... 23
Shutdown ... 24
Undervoltage Lockout (UVLO) ... 24
Soft Start ... 24
PWM Drive Signals ... 25
Peak Current Protection and Diode Emulation (Synchronous) ... 25
Frequency and Phase Control ... 26
Maximum Duty Cycle ... 26
Fault Input ... 27
Thermal Shutdown (TSD) ... 27
Applications Information ... 28
Analog Controller ... 28
Functional Description ... 28
Power Supply Connections ... 29
Current Sense In-Amp Connections ... 29
Voltage Sense Differential Amplifier Connections ... 29
Battery Current and Voltage Control Inputs (ISET and VSET) ... 29
Loop Filter Amplifiers ... 30
Selecting Charge or Discharge Options ... 30
Select RCL and R_{CLVT} for the Peak Current Limit ... 30
Setting the Operating Frequency and Programming the Synchonization Pin ... 31
Programming the Maximum Duty Cycle ... 32
Selecting C_{SS} ... 33
Additional Information ... 33
Outline Dimensions ... 34
Ordering Guide ... 34

REVISION HISTORY

10/2018—Rev. 0 to Rev. A

Changes to Figure 34 and Figure 35 ... 19
Changes to Figure 38 ... 21
Changes to Figure 47 ... 26
Changes to Figure 49 ... 28
Changes to Figure 50 ... 29
Updated Outline Dimensions ... 34

10/2017—Revision 0: Initial Version

SPECIFICATIONS

AVCC = 15 V, AVEE = −15 V, VIN = 24 V, and T_A = 25°C, unless otherwise noted.

ANALOG FRONT-END AND CONTROLLER SPECIFICATIONS

Table 1.

Parameter	Test Conditions/Comments	Min	Typ	Max	Unit
CURRENT SENSE INSTRUMENTATION AMPLIFIER					
Gain			66		V/V
Gain Error	V_{ISMEA} = ±10 V			±0.1	%
Gain Drift	$T_A = T_{MIN}$ to T_{MAX}			3	ppm/°C
Offset Voltage Referred to Input (RTI)	ISREFH pin and ISREFL pin grounded	−100		+100	µV
Offset Voltage Drift	$T_A = T_{MIN}$ to T_{MAX}	−0.6	−0.1	+0.6	µV/°C
Input Bias Current			15	30	nA
Input Common-Mode Voltage Range	$V_{ISVP} - V_{ISVN}$ = 0 V	AVEE + 2.3		AVCC − 2.4	V
Differential Input Impedance			150		GΩ
Common-Mode Input Impedance			150		GΩ
Output Voltage Swing	RL = 10 kΩ	AVEE + 1.5		AVCC − 1.2	V
Reference Input Voltage Range	ISREFH pin and ISREFL pin tied together	AVEE + 1.5		AVCC − 1.5	V
Reference Bias Current	$V_{ISVP} = V_{ISVN}$ = 0 V		5		µA
Output Voltage Level Shift	ISREFL pin grounded				
Maximum	ISREFH pin connected to VREF pin	11	12.5	14	mV
Scale Factor	V_{ISMEA}/V_{ISREFH}	4.4	5	5.6	mV/V
Short-Circuit Current			40		mA
Common-Mode Rejection Ratio (CMRR)	ΔV_{CM} = 20 V	120			dB
Temperature Coefficient	$T_A = T_{MIN}$ to T_{MAX}			0.01	µV/V/°C
Power Supply Rejection Ratio (PSRR)	ΔV_S = 10 V	122	140		dB
Small Signal −3 dB Bandwidth			675		kHz
Slew Rate	ΔV_{ISMEA} = 10 V		5		V/µs
VOLTAGE SENSE DIFFERENCE AMPLIFIER					
Gain			0.4		V/V
Gain Error	V_{IN} = ±10 V			±0.1	%
Gain Drift	$T_A = T_{MIN}$ to T_{MAX}			3	ppm/°C
Offset Voltage Referred to Output (RTO)	BVREFH pin and BVREFL pin grounded	−250		+250	µV
Offset Voltage Drift	$T_A = T_{MIN}$ to T_{MAX}	−2	−0.1	+2	µV/°C
Differential Input Voltage Range	V_{BVN} = 0 V, V_{BVREFL} = 0 V	−17		+17	V
Input Common-Mode Voltage Range	V_{BVMEA} = 0 V	−40		+40	
Differential Input Impedance			400		kΩ
Input Common-Mode Impedance			140		kΩ
Output Voltage Swing	RL = 10 kΩ	AVEE + 1.5		AVCC − 1.2	V
Reference Input Voltage Range	BVREFH pin and BVREFL pin connected	AVEE + 1.5		AVCC − 1.5	V
Output Voltage Level Shift	BVREFL pin grounded				
Maximum	BVREFH pin connected to VREF pin	11.0	12.5	14.0	mV
Scale Factor	V_{BVMEA}/V_{BVREFH}	4.4	5	5.6	mV/V
Short-Circuit Current			40		mA
CMRR	ΔV_{CM} = 10 V, RTO	90			dB
Temperature Coefficient	$T_A = T_{MIN}$ to T_{MAX}			0.05	µV/V/°C
PSRR	ΔV_S = 10 V, RTO	114	123		dB
Small Signal −3 dB Bandwidth			3.0		MHz
Slew Rate	ΔV_{BVMEA} = 10 V		0.9		V/µs

Parameter	Test Conditions/Comments	Min	Typ	Max	Unit
CC AND CV LOOP FILTER AMPLIFIERS					
Offset Voltage				150	µV
Offset Voltage Drift	$T_A = T_{MIN}$ to T_{MAX}	−1	+0.02	1	µV/°C
Input Bias Current		−5		+5	nA
Input Common-Mode Voltage Range		AVEE + 1.5		AVCC − 1.8	V
Output Voltage Swing	V_{VINT} voltage range	AVEE + 1.5		5	V
Source Short-Circuit Current			1		mA
Sink Short-Circuit Current			40		mA
PSRR	ΔV_S = 10 V	113	122		dB
Small Signal Gain Bandwidth Product			3		MHz
Slew Rate	ΔV_{VINT} = 10 V		1		V/µs
CC to CV Transition Time			1.8		µs
VSET VOLTAGE BUFFER					
Nominal Gain			1		V/V
Offset Voltage				150	µV
Offset Voltage Drift	$T_A = T_{MIN}$ to T_{MAX}	−1	+0.06	+1	µV/°C
Input Bias Current		−5		+5	nA
Input/Output Voltage Range		AVEE + 1.5		AVCC − 1.8	V
Short-Circuit Current			40		mA
PSRR	ΔV_S = 10 V	113	122		dB
Small Signal −3 dB Bandwidth			4		MHz
Slew Rate	ΔV_{VSETBF} = 10 V		1		V/µs
VOLTAGE REFERENCE					
Nominal Output Voltage	With respect to AGND		2.5		V
Output Voltage Error				±1	%
Temperature Drift	$T_A = T_{MIN}$ to T_{MAX}			16	ppm/°C
Line Regulation	ΔV_S = 10 V			10	ppm/V
Load Regulation	ΔI_{VREF} = 1 mA (source only)			300	ppm/mA
Source Short-Circuit Current			15		mA

PULSE-WIDTH MODULATOR SPECIFICATIONS

Table 2.

Parameter	Test Conditions/Comments	Min	Typ	Max	Unit
SOFT START (SS)					
SS Pin Current	V_{SS} = 0 V	4	5	6	µA
SS Threshold Rising	Switching enable threshold		0.52	0.65	V
SS Threshold Falling	Switching disable threshold	0.4	0.5		V
End of Soft Start	Asynchronous to synchronous threshold	4.4	4.5	4.6	V
PWM CONTROL					
Frequency					
Frequency Range	R_{FREQ} = 33.2 kΩ to 200 kΩ	50		300	kHz
Oscillator Frequency	R_{FREQ} = 100 kΩ	90	100	110	kHz
FREQ Pin Voltage	R_{FREQ} = 100 kΩ	1.1	1.255	1.4	V
SYNC Output (Internal Frequency Control)	V_{SCFG} ≥ 4.53 V or SCFG pin floating				
Internal SYNC Range	For SYNC output	50		300	kHz
SYNC Output Clock Duty Cycle	V_{SCFG} = V_{VREG}, R_{FREQ} = 100 kΩ	40	50	60	%
SYNC Sink Pull Down Resistance	V_{SCFG} = 5 V, I_{SYNC} = 10 mA		10	20	Ω
SYNC Input (External Frequency Control)	V_{SCFG} < 4.25 V				
External SYNC Range	For SYNC input clock	50		300	kHz
SYNC Internal Pull-Down Resistor		0.5	1	1.5	MΩ
Maximum SYNC Pin Voltage	For external sync operation		5		V
SYNC Threshold Rising			1.2	1.5	V
SYNC Threshold Falling		0.7	1.05		V
SCFG					
SCFG High Threshold					
Rising	SYNC set to input		4.53	4.7	V
Falling	SYNC set to output	4.25	4.47		V
SCFG Low Threshold					
Rising	Programmable phase shift above threshold		0.55	0.65	V
Falling	No phase shift	0.4	0.5		V
SCFG Pin Current	R_{FREQ} = 100 kΩ, V_{SCFG} = DGND	10	11	12	µA
DMAX					
Maximum Internal Duty Cycle	V_{DMAX}, V_{SS}, and V_{SCFG} = 5 V		97		%
DMAX Setting Current	V_{DMAX} = 0 V, R_{FREQ} = 100 kΩ	10	11	12	µA
DMAX and SCFG Current Matching[1]				10	%
DT					
DT Pin Current	R_{FREQ} = 100 kΩ, V_{DT} = DGND		20	24	µA
Maximum DT Programming Voltage	See Figure 28			3.5	V
CURRENT LIMIT (CL)					
CLVT					
CLVT Pin Current	Minimum CLVT pin voltage = 50 mV	16	21	27	µA
CLP, CLN					
Common-Mode Range	V_{CLP} = V_{CLN}	0		8	V
Input Resistance		24	30	36	kΩ
Current Limit Threshold Offset	V_{CLP} = V_{CLN}, R_{CLVT} = 2.49 kΩ		50		mV
CLFLG	Open-drain, active low output				
Max CLFLG Voltage	Open-drain output			5.5	V
CFLG Pull-Down Resistance			8		Ω
Current Limit	R_{FREQ} = 100 kΩ, 16 consecutive clock pulses				
Overload Time			160		µs
Cool Down Time			160		µs

Parameter	Test Conditions/Comments	Min	Typ	Max	Unit
ZERO CROSSING DETECTION (ZCD)					
ZCD Threshold Offset	(V_{CLP} + V_{CLN})/2, for common-mode voltage (CMV) = 0 V to 8 V		0		mV
VREG					
Low Dropout (LDO) Regulator Output Voltage	V_{IN} = 6 V to 60 V, no external load	4.9	5	5.1	V
Load Regulation	V_{IN} = 6 V, I_{OUT} = 0 mA to 5 mA	4.9	5	5.1	V
PWM DRIVE LOGIC SIGNALS (DH/DL)					
DL Drive Voltage	No load		VREG		V
DH Drive Voltage	No load		VREG		V
DL and DH Sink Resistance	I_{DL} = 10 mA		1.4	2.6	Ω
DL and DH Source Resistance	I_{DL} = 10 mA		1.4	2.6	Ω
DL and DH Pull-Down Resistor		0.5	1	1.5	MΩ
THERMAL SHUTDOWN (TSD)					
TSD Threshold					
Rising			150		°C
Falling			125		°C

[1] The DMAX and SCFG current matching specification is calculated by taking the absolute value of the difference between the measured I_{SCFG} and I_{DMAX} currents, dividing them by the 11 µA typical value, and multiplying this result by 100. DMAX and SCFG current matching (%) = (I_{SCFG} – I_{DMAX}/11 µA) × 100.

DIGITAL INTERFACE SPECIFICATIONS

Table 3.

Parameter	Test Conditions/Comments	Min	Typ	Max	Unit
DIGITAL INTERFACE, MODE INPUT	MODE pin				
MODE Threshold Rising			1.2	1.4	V
MODE Threshold Falling		0.7	1.0		V
MODE Switching Time			400		ns
PRECISION ENABLE LOGIC (EN)					
Maximum EN Pin Voltage				60	V
EN Threshold Rising			1.26	1.4	V
EN Threshold Falling		1.1	1.2		V
EN Pin Current	V_{EN} = 5 V, internal pull-down		0.25	2	µA
$\overline{FAULT}$	Active low input				
Maximum $\overline{FAULT}$ Pin Voltage				60	V
$\overline{FAULT}$ Threshold Rising			1.2	1.5	V
$\overline{FAULT}$ Threshold Falling		0.7	1.0		V
$\overline{FAULT}$ Pin Current	V$\overline{FAULT}$ = 5 V, internal 8.5 MΩ pull-down resistor		0.5	2	µA

POWER SUPPLY

Table 4.

Parameter	Test Conditions/Comments	Min	Typ	Max	Unit
ANALOG POWER SUPPLY					
Operating Voltage Range					
AVCC		10		36	V
AVEE		−26		0	V
Analog Supply Range	AVCC − AVEE	10		36	V
Quiescent Current					
AVCC			4.7	6.5	mA
AVEE			4.4	6.0	mA
PWM POWER SUPPLY (VIN)					
VIN Voltage Range		6		60	V
VIN Supply Current	R_{FREQ} = 100 kΩ, V_{SS} = 0 V, SYNC = open circuit (OC), $\overline{FAULT}$ = low, EN = high		2.2	3.0	mA
UVLO Threshold Rising	V_{IN} rising		5.75	6	V
UVLO Threshold Falling	V_{IN} falling	5.1	5.34		V

TEMPERATURE RANGE SPECIFICATIONS

Table 5.

Parameter	Min	Typ	Max	Unit
TEMPERATURE RANGE				
For Specified Performance	−40		+85	°C
Operational	−55		+125	°C

ABSOLUTE MAXIMUM RATINGS

Table 6.

Parameter	Rating
Analog Supply Voltage (AVCC – AVEE)	36 V
PWM Supply Voltage (VIN – DGND)	–0.3 V to +61 V
Internal Regulator Voltage (VREG – DGND)	5.5 V
Voltage	
Input Pins (ISVP, ISVN, BVP, and BVN)	AVEE + 40 V
Analog Controller and Front-End Pins (ISREFH, ISREFL, BVREFL, BVREFH, VREF, VSET, VVP0, BVMEA, VVE0, VVE1, VINT, IVE0, IVE1, ISMEA, ISET)	AVCC – 40 V
PWM Pins	
SYNC, MODE	–0.3 V to +5.5 V
DH, DL, SS, DMAX, SCFG, DT, FREQ, CLVT	–0.3 V to VREG + 0.3 V
Current Limit Sense Pins (CLP, CLN)	–0.3 V to +61 V
$\overline{\text{FAULT}}$ Pin and EN Pin	–0.3 V to +61 V
Maximum Digital Supply Voltage	
Positive Analog Supply (VREG – AVCC)	0.3 V
Negative Analog Supply (VREG – AVEE)	–0.3 V
Maximum Digital Ground	
Positive Analog Supply (DGND – AVCC)	0.3 V
Negative Analog Supply (DGND – AVEE)	–0.3 V
Maximum Analog Ground	
Positive Analog Supply (AGND – AVCC)	0.3 V
Negative Analog Supply (AGND – AVEE)	–0.3 V
Analog Ground with Respect to the Digital Ground (AGND – DGND)	
Maximum	0.3 V
Minimum	–0.3 V
Storage Temperature Range	–65°C to +150°C

Stresses at or above those listed under Absolute Maximum Ratings may cause permanent damage to the product. This is a stress rating only; functional operation of the product at these or any other conditions above those indicated in the operational section of this specification is not implied. Operation beyond the maximum operating conditions for extended periods may affect product reliability.

THERMAL RESISTANCE

Thermal performance is directly linked to printed circuit board (PCB) design and operating environment. Careful attention to PCB thermal design is required.

Table 7. Thermal Resistance

Package Type	θ_{JA}[2]	Unit
ST-48[1]	81	°C/W

[1] Dissipation ≤ 0.3, TA = 25°C.
[2] θ_{JA} is the natural convection junction to ambient thermal resistance measured in a one cubic foot sealed enclosure.

ESD CAUTION



ESD (electrostatic discharge) sensitive device. Charged devices and circuit boards can discharge without detection. Although this product features patented or proprietary protection circuitry, damage may occur on devices subjected to high energy ESD. Therefore, proper ESD precautions should be taken to avoid performance degradation or loss of functionality.

PIN CONFIGURATION AND FUNCTION DESCRIPTIONS

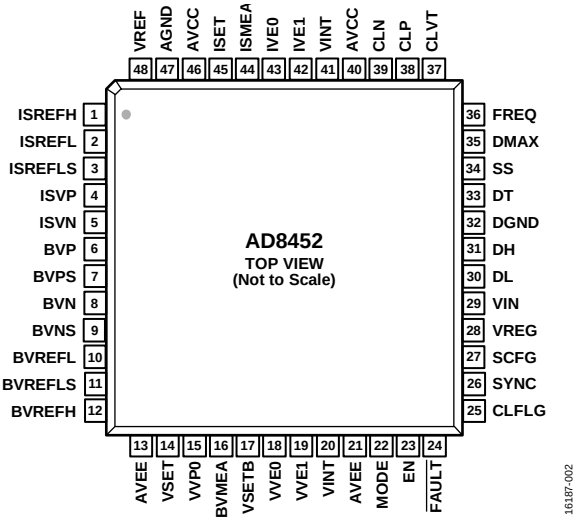

Figure 2. Pin Configuration

Table 8. Pin Function Descriptions

Pin No.	Mnemonic	Type[1]	Description
1	ISREFH	Input	Reference Input for the Current Sense Amplifier. Connect this pin to the VREF pin to shift the current-sense instrumentation amplifier output by 12.5 mV. Otherwise, connect this pin to the ISREFL pin.
2	ISREFL	Input	Reference Input for the Current Sense Amplifier. The default connection is to ground.
3	ISREFLS	Test	Kelvin Sense Pin for the ISREFL Pin.
4	ISVP	Input	Current Sense Instrumentation Amplifier Positive (Noninverting) Input. Connect this pin to the high side of the current sense shunt.
5	ISVN	Input	Current Sense Instrumentation Amplifier Negative (Inverting) Inputs. Connect this pin to the low side of the current sense shunt.
6	BVP	Input	Battery Voltage Difference Amplifier Positive (Noninverting) Input.
7	BVPS	Test	Kelvin Sense Pin for the Battery Voltage Difference Amplifier Input, BVP.
8	BVN	Input	Battery Voltage Difference Amplifier Negative (Inverting) Input.
9	BVNS	Test	Kelvin Sense Pin for the Battery Voltage Difference Amplifier Input, BVN.
10	BVREFL	Input	Reference Input for the Voltage Sense Difference Amplifier. The default connection for this pin is to ground.
11	BVREFLS	Test	Kelvin Sense Pin for the BVREFL Pin.
12	BVREFH	Input	Reference Input for the Difference Amplifier. Connect to the VREF pin to level shift V_{BVMEA} by approximately 12.5 mV. Otherwise, connect this pin to the BVREFL pin.
13, 21	AVEE	N/A	Analog Negative Supply Pins.
14	VSET	Input	Scaled CV Loop Control Input for Battery Charge or Discharge Cycle.
15	VVP0	Input	Noninverting CV Loop Filter Amplifier Input for Discharge Mode.
16	BVMEA	Output	Scaled Battery Voltage, Difference Amplifier Output.
17	VSETB	Output	Buffered VSET Voltage.
18	VVE0	Input	Inverting Input of the CV Loop Filter Amplifier When in Discharge Mode.
19	VVE1	Input	Inverting Input of the CV Loop Filter Amplifier When in Charge Mode.
20, 41	VINT	Output	Aggregated Result of the Battery Voltage and Current Sense Integration.
22	MODE	Logic input	Logic Level Input to Select between Charge and Discharge Modes. Bring this pin low for discharge mode, and bring this pin high for charge mode.
23	EN	Logic input	Logic Level Enable Input. Drive EN logic low to shut down the device. Drive EN logic high to turn on the device.
24	$\overline{\text{FAULT}}$	Logic input	External Fault Comparator Connection. When not connected, this pin is pulled up using a 10 kΩ resistor to the VREG pin. The DH and DL drivers are disabled when $\overline{\text{FAULT}}$ is low, and are enabled when $\overline{\text{FAULT}}$ is high.

Pin No.	Mnemonic	Type[1]	Description
25	CLFLG	Output	Current-Limit Flag. CLFLG goes low and stays low when the AD8452 is in current limit mode. Connect a 10 kΩ (minimum) resistor to the VREG pin.
26	SYNC	Input/ output	C lock Synchronization Pin. Synchronizes the clock (switching frequency) when multiple channels are phase interleaved. Connect a 10 kΩ (minimum) resistor to the VREG pin.
27	SCFG	Input/ output	Synchronization Configuration Pin. See Table 10.
28	VREG	Output	Internal LDO 5 V Regulator Output and Internal Bias Supply. Connect a bypass capacitor of 1 µF or greater from this pin to ground.
29	VIN	Input	Supply Voltage to the PWM Section. VIN is typically the same as the output switch supply voltage.
30	DL	Output	Logic Drive Output for the External Low-Side Metal-Oxide Semiconductor Field-Effect Transistor (MOSFET) Driver.
31	DH	Output	Logic Drive Output for the External High-Side MOSFET Driver.
32	DGND	N/A	Digital and PWM Ground.
33	DT	Output	Dead Time Programming Pin. Connect an external resistor between this pin and ground to set the dead time. Do not leave this pin floating.
34	SS	Output	Soft Start Control Pin. A capacitor connected from the SS pin to ground sets the soft start ramp time. See the Selecting CSS section.
35	DMAX	Input	Maximum Duty Cycle Input. Connect an external resistor to ground to set the maximum duty cycle. If the 97% internal maximum duty cycle is sufficient for the application, tie this pin to VREG. If DMAX is left floating, this pin is internally pulled up to VREG.
36	FREQ	N/A	Frequency Set Pin. Connect an external resistor between this pin and ground to set the frequency between 50 kHz and 300 kHz. When the AD8452 is synchronized to an external clock (slave mode), set the slave frequency to 90% of the master frequency by multiplying the master R_{FREQ} value by 1.11.
37	CLVT	Input	Current-Limit Voltage Threshold. With user selected resistor value, CLVT establishes a threshold voltage for the current limit comparator. See the Select RCL and RCLVT for the Peak Current Limit section.
38	CLP	Input	Current-Limit/Diode Emulation Amplifier Positive Sense Pin.
39	CLN	Input	Current-Limit/Diode Emulation Amplifier Negative Sense Pin.
40, 46	AVCC	N/A	Analog Positive Supply Pins.
42	IVE1	Input	Inverting Input of the CC Loop Filter Amplifier When in Charge Mode.
43	IVE0	Input	Inverting Input of the CC Loop Filter Amplifier When in Discharge Mode.
44	ISMEA	Output	Current Sense Instrumentation Amplifier Output.
45	ISET	Input	Scaled CC Voltage Loop Control Input for Battery Charge or Discharge Cycles. ISET is typically the same for charge and discharge cycle.
47	AGND	N/A	Analog Ground.
48	VREF	Output	2.5 V Reference. Bypass this pin with a high quality 10 nF NP0 ceramic capacitor in series with a 10 Ω (maximum) resistor.

[1] N/A means not applicable.

TYPICAL PERFORMANCE CHARACTERISTICS

AVCC = 15 V, AVEE = −15 V, VIN = 24 V, T_A = 25°C, and R_L = ∞, unless otherwise noted.

IN-AMP CHARACTERISTICS

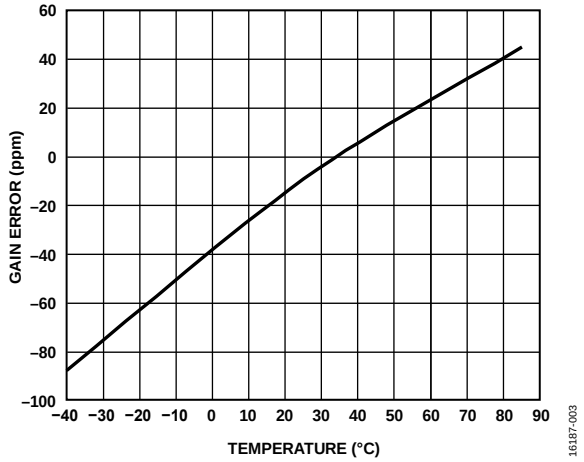

Figure 3. Gain Error vs. Temperature

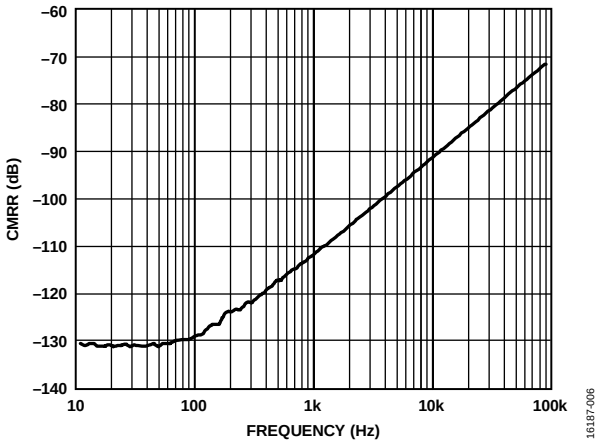

Figure 6. CMRR vs. Frequency

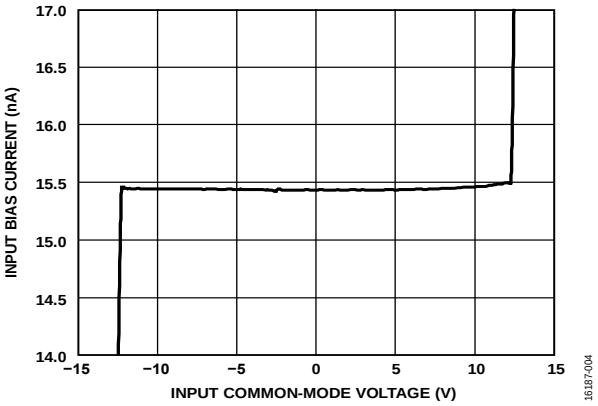

Figure 4. Input Bias Current vs. Input Common-Mode Voltage

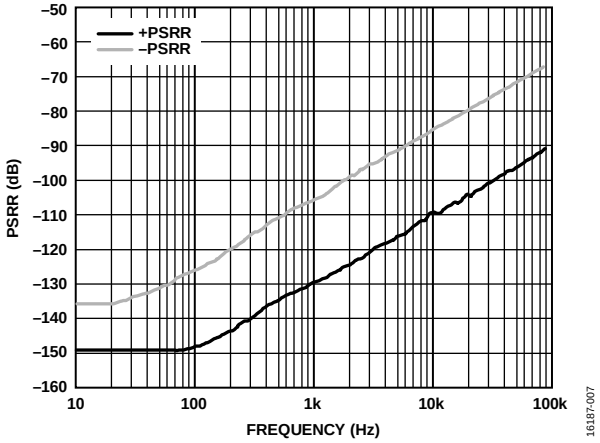

Figure 7. PSRR vs. Frequency

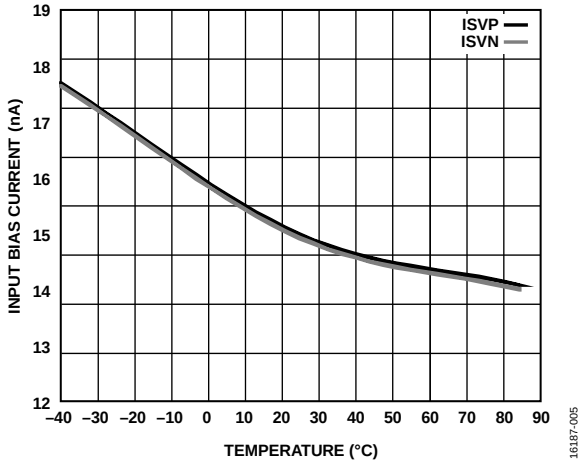

Figure 5. Input Bias Current vs. Temperature

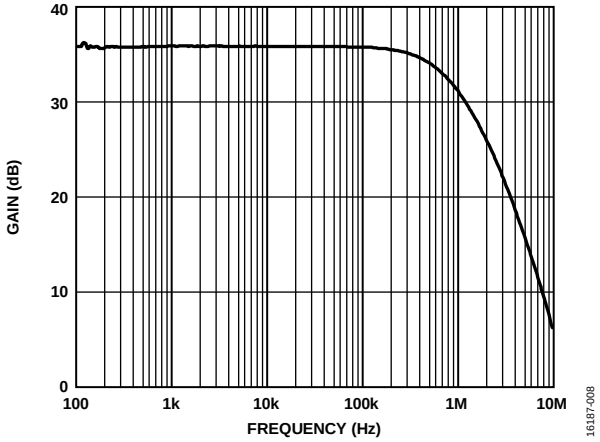

Figure 8. Gain vs. Frequency

DIFFERENCE AMPLIFIER CHARACTERISTICS

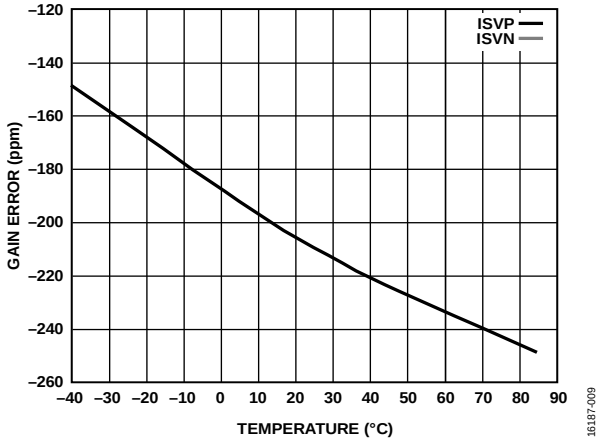

Figure 9. Gain Error vs. Temperature

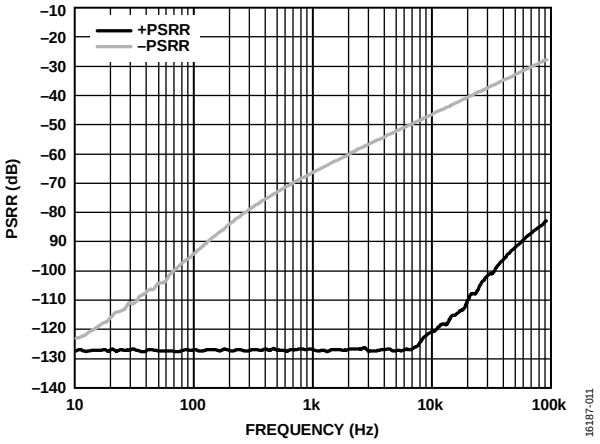

Figure 11. PSRR vs. Frequency

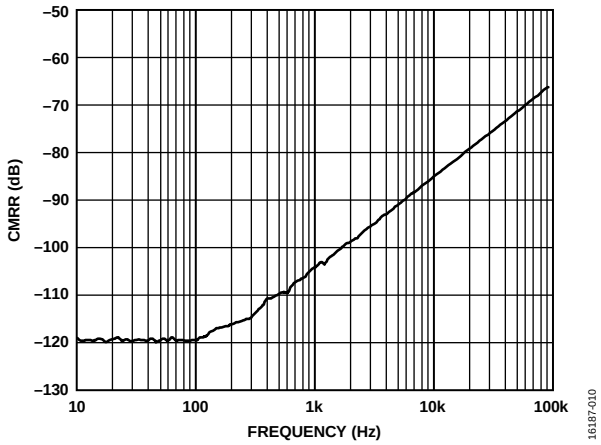

Figure 10. CMRR vs. Frequency

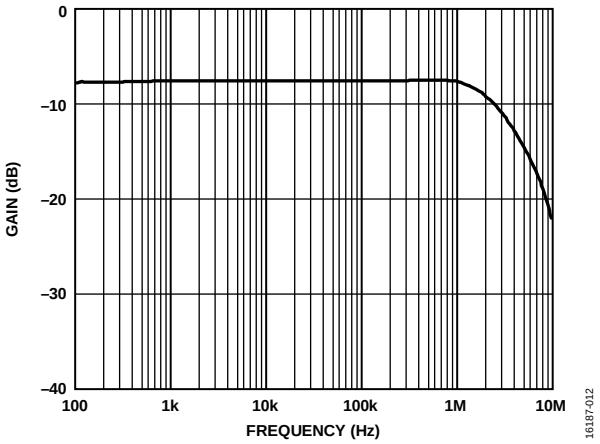

Figure 12. Gain vs. Frequency

CC AND CV LOOP FILTER AMPLIFIERS AND VSET BUFFER (EXCEPT WHERE NOTED)

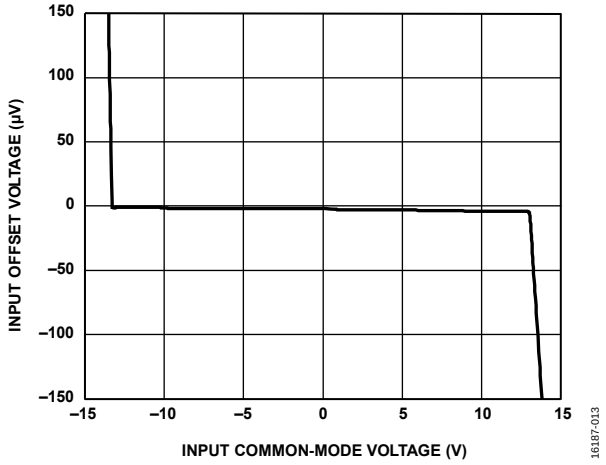

Figure 13. Input Offset Voltage vs. Input Common-Mode Voltage

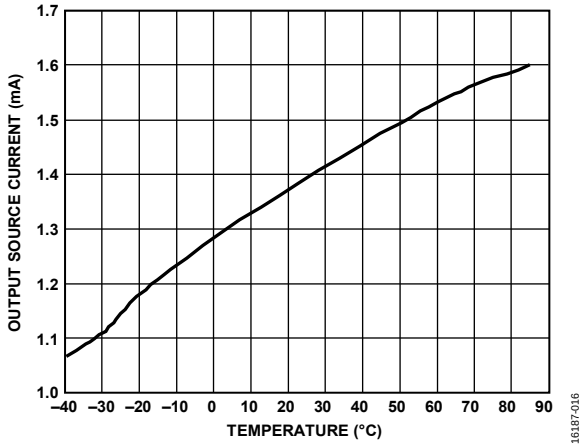

Figure 16. Output Source Current vs. Temperature

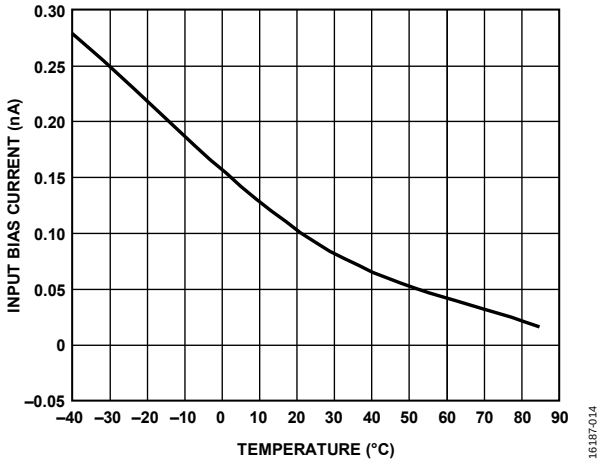

Figure 14. Input Bias Current vs. Temperature

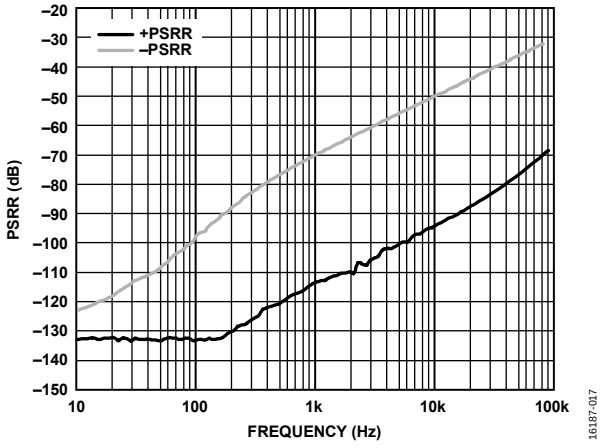

Figure 17. PSRR vs. Frequency

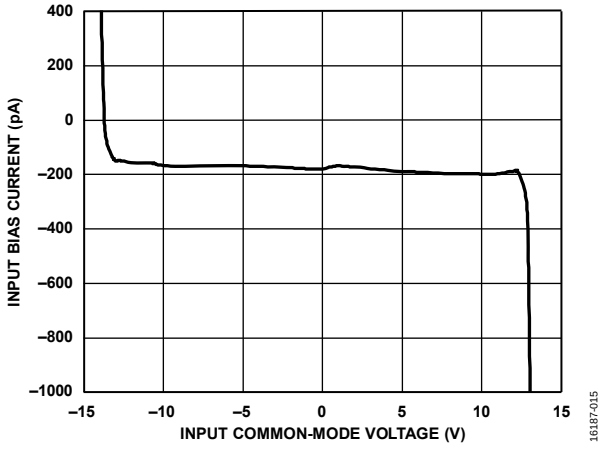

Figure 15. Input Bias Current vs. Input Common-Mode Voltage

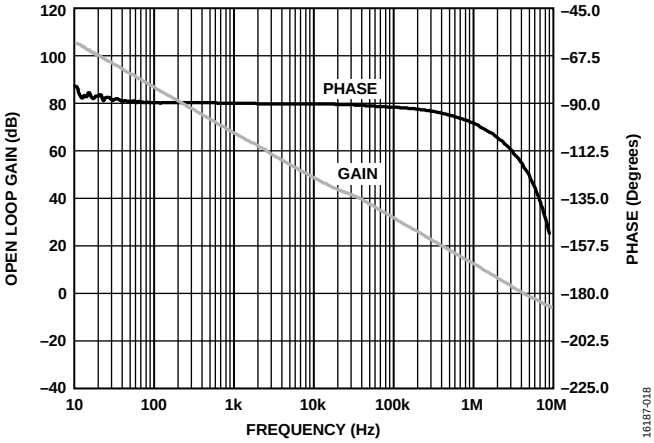

Figure 18. Open-Loop Gain and Phase vs. Frequency for CC and CV Loop Amplifiers

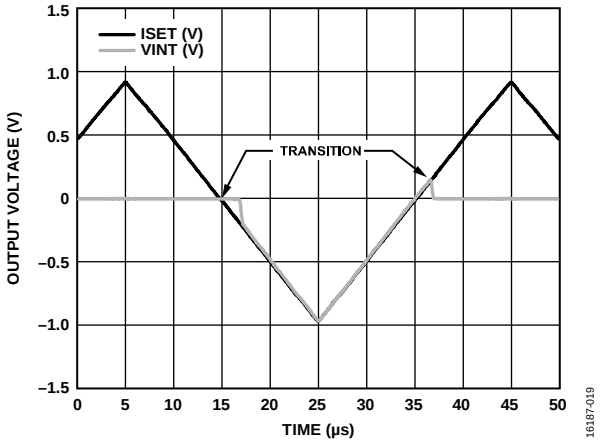

Figure 19. CC to CV Transition

REFERENCE CHARACTERISTICS

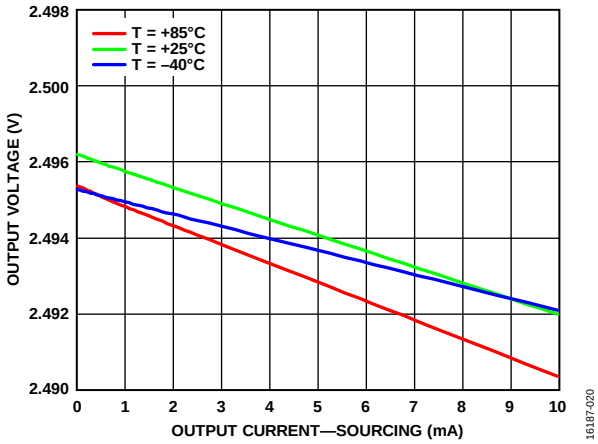

Figure 20. Sourcing Regulation for Three Values of Temperature

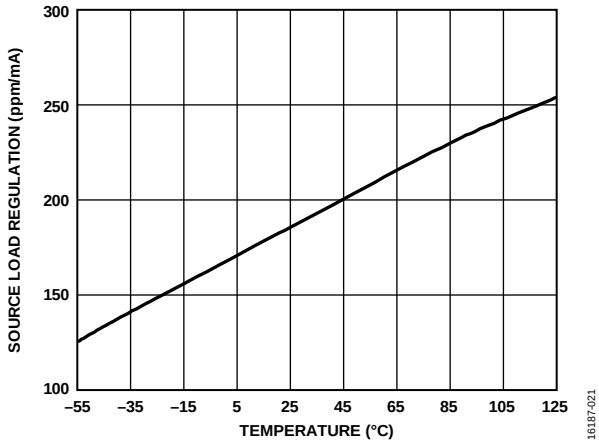

Figure 21. Source Load Regulation vs. Temperature

PULSE-WIDTH MODULATOR

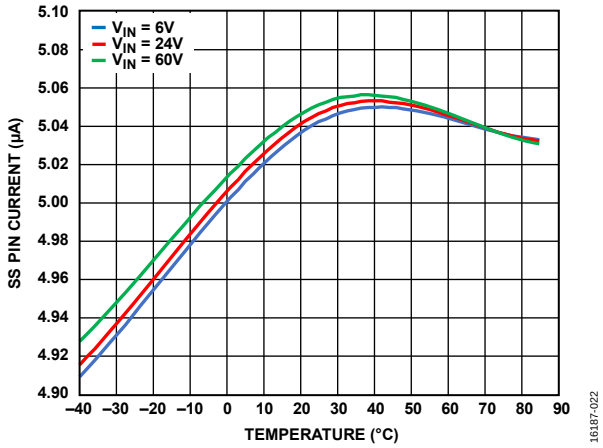

Figure 22. SS Pin Current vs. Temperature

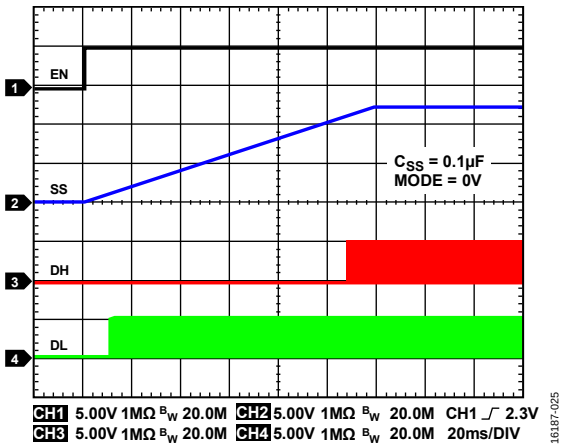

Figure 25. Shows Reversal of DH Pin and DL Pin Timing at Startup (0 V to 5 V at EN Pin) When AD8452 Is in Discharge Mode

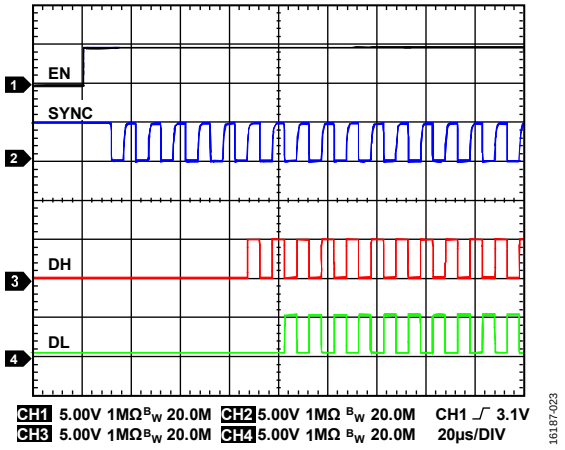

Figure 23. Timing, Referred to Startup (0 V to 5 V at EN Pin), As Observed at Three Logic Output Pins When AD8452 Is in Charge Mode

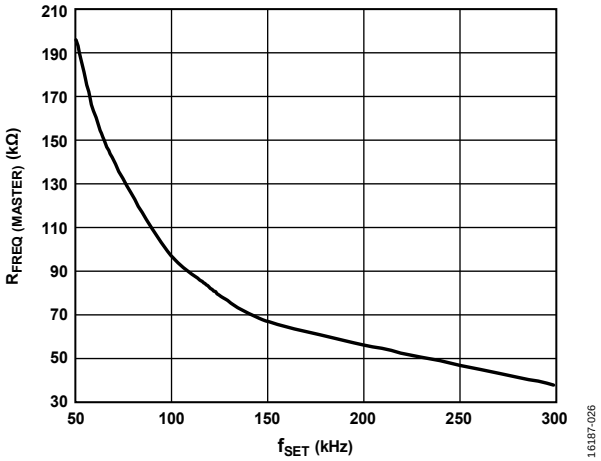

Figure 26. $R_{FREQ\ (MASTER)}$ vs. Switching Frequency (f_{SET})

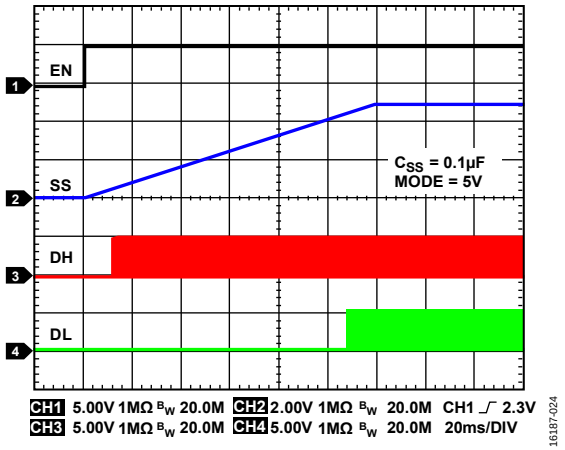

Figure 24. Soft Start Ramp Timing at SS Pin, Referred to Startup (0 V to 5 V at the EN Pin) As Observed at Logic Level Outputs, DH and DL, When AD8452 Is in Charge Mode

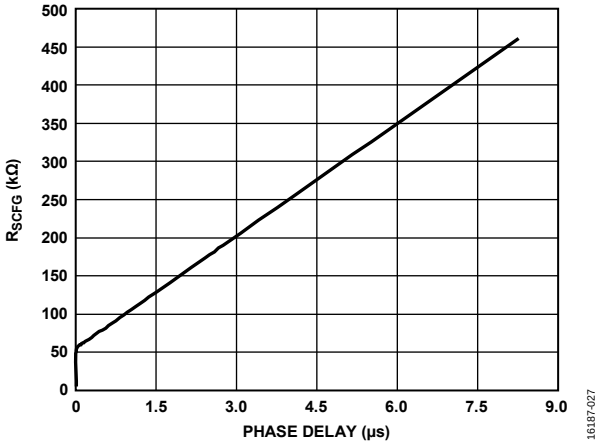

Figure 27. R_{SCFG} (Calculated) vs. Phase Time Delay (t_{DELAY})

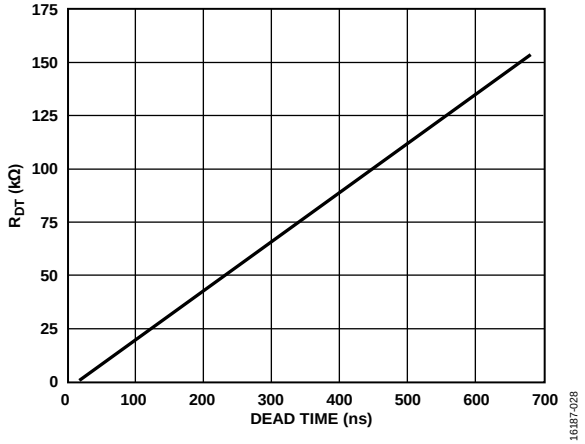

Figure 28. DT Pin Resistance (R_{DT}) vs. Dead Time (t_{DEAD})

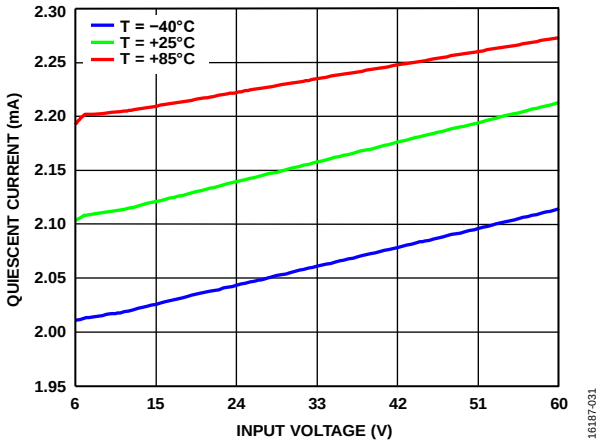

Figure 31. Quiescent Current vs. Input Voltage (V_{IN}) at Various Temperatures, EN Pin Low

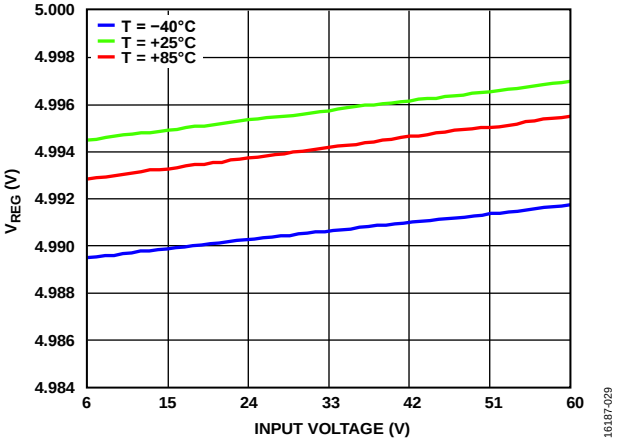

Figure 29. VREG vs. Input Voltage (V_{IN}) at Various Temperatures and No Load

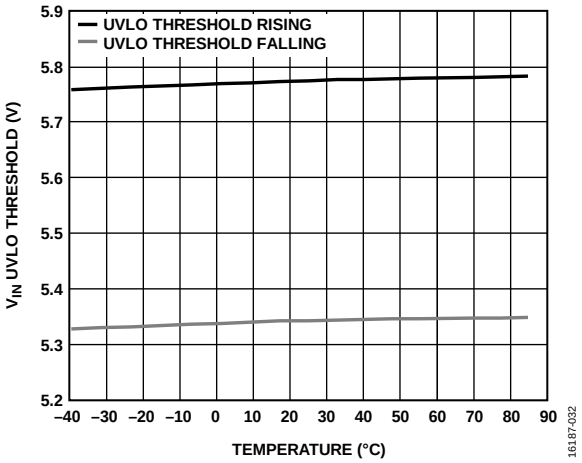

Figure 32. Input Voltage (V_{IN}) UVLO Threshold vs. Temperature

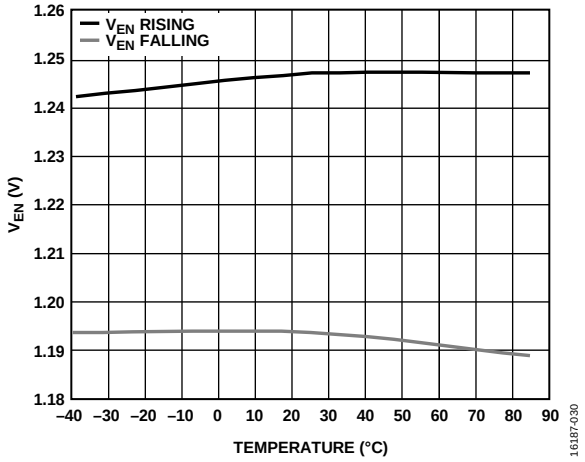

Figure 30. EN Pin Threshold Voltage (V_{EN}) vs. Temperature

THEORY OF OPERATION

INTRODUCTION

Lithium ion (Li-Ion) batteries require an elaborate and time consuming postproduction process known as forming. Battery formation consists of a series of charge/discharge cycles that require precise current and voltage control and monitoring. The AD8452 provides not only the stringent current and voltage accuracy requirements, but also a highly accurate PWM, with logic level DH and DL outputs ready for a half-H bridge configured switch mode power output converter—all in a highly compact 7 mm × 7 mm package.

The analog front end of the AD8452 includes a precision current sense in-amp with gain of 66× and a precision voltage sense difference amplifier with a gain of 0.4× for battery voltage.

As shown in Figure 38, the AD8452 provides constant CC/CV charging technologies, with transparent internal switching between the two. Typical systems induce predetermined levels of current into or out of the battery until the voltage reaches a target value. At this point, a set constant voltage is applied across the battery terminals, reducing the charge current until reaching zero.

The AD8452 features a complete PWM including on-board user adjustable features such as clock frequency, duty cycle, clock phasing, current limiting, soft start timing, and multichannel synchronization.

Figure 33 is the block diagram of the AD8452, illustrating the distinct sections of the AD8452, including the in-amp and difference amplifier measurement blocks, loop filter amplifiers, and PWM.

Figure 34 is a block diagram of the AD8452 integrated within a battery formation and test system. The AD8452 is usable over a wide range of current and voltage applications simply by judicious selection of a current sense shunt, selected according to system requirements.

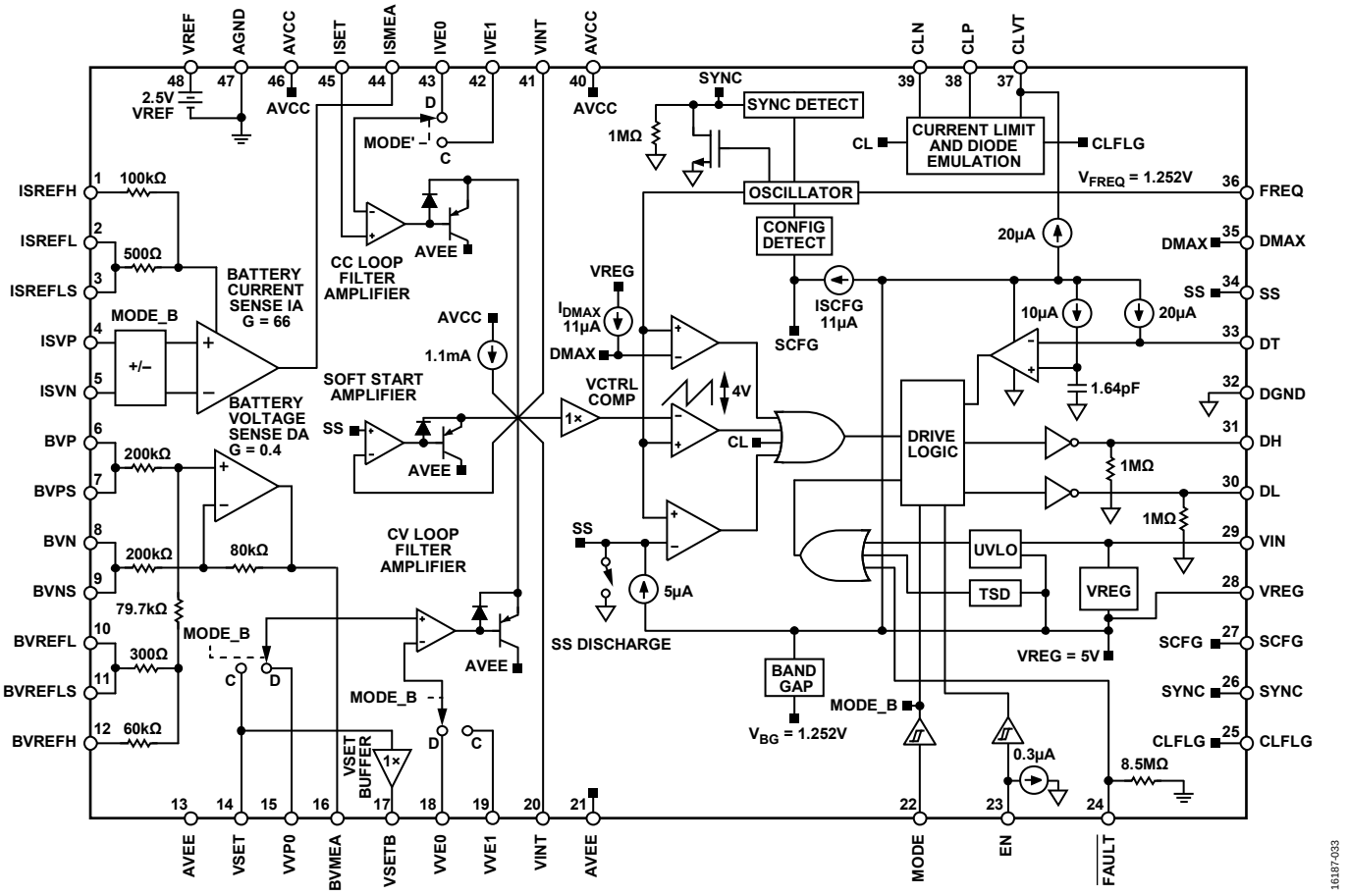

Figure 33. AD8452 Detailed Block Diagram

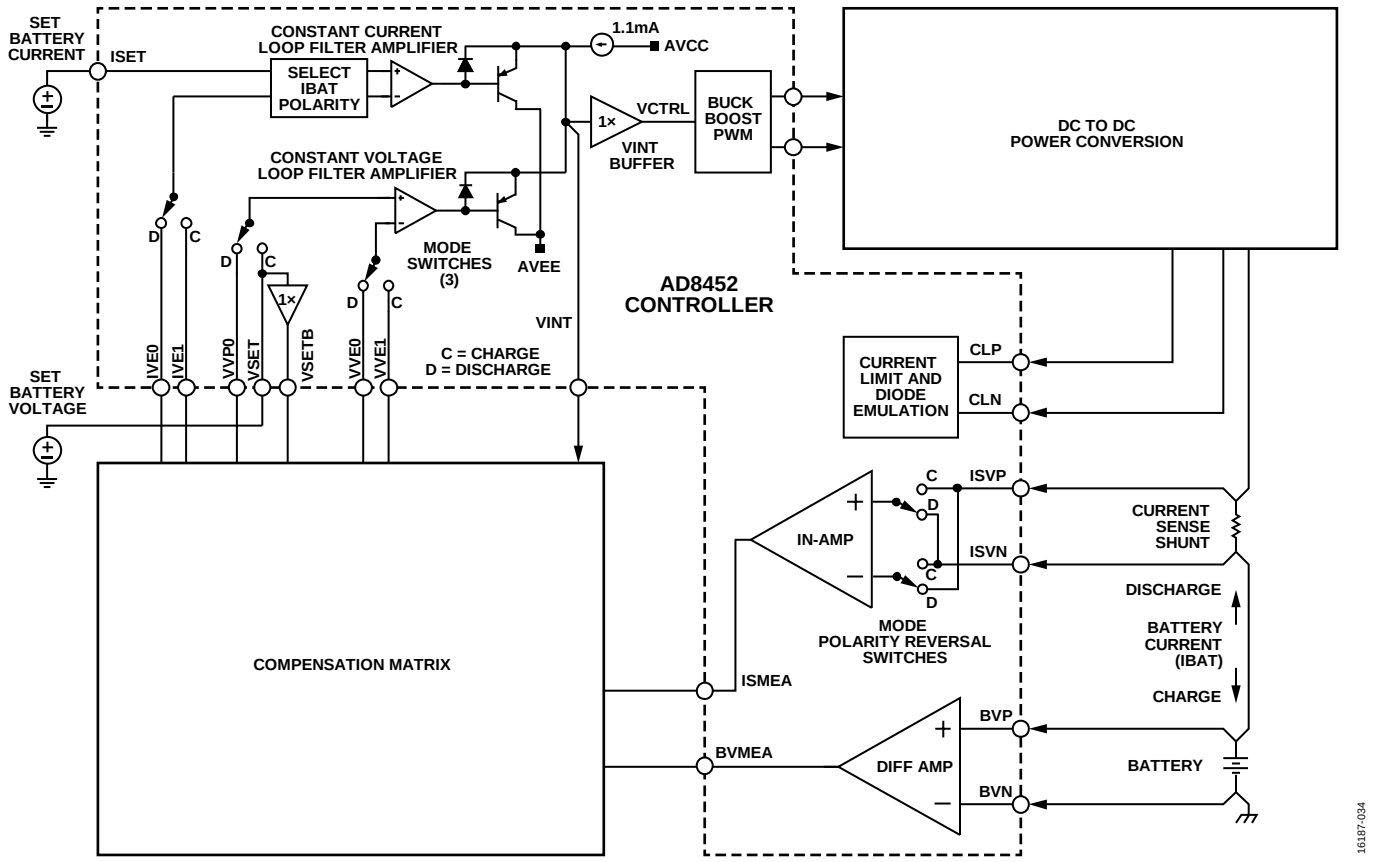

Figure 34. Signal Path of a Li-Ion Battery Formation and Test System Using the AD8452

INSTRUMENTATION AMPLIFIER (IN-AMP)

Figure 35 is a block diagram of the AD8452 in-amp used to monitor battery current when connected to a low ohmic value shunt. The architecture of the in-amp is the classic 3-op-amp topology, similar to the Analog Devices, Inc., industry-standard AD8221 or AD620, and is configured for a fixed gain of 66 V/V. This architecture, combined with ADI exclusive precision laser trimming, provides the highest achievable CMRR and optimizes error free (gain error better than 0.1%) high-side battery current sensing. For more information about instrumentation amplifiers, see *A Designer's Guide to Instrumentation Amplifiers*.

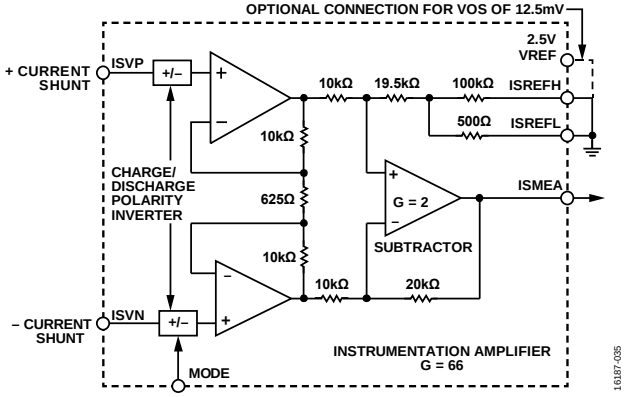

Figure 35. Simplified Block Diagram of the Precision 3-Op-Amp In-Amp

Reversing Polarity When Charging and Discharging

Figure 34 shows that during the charge cycle, the power converter drives current into the battery, generating a positive voltage across the current sense shunt. During the discharge cycle, however, the power converter drains current from the battery, generating a negative voltage across the shunt resistor. In other words, the battery current reverses polarity when the battery discharges.

When in the constant current discharge mode control loop, this reversal of the in-amp output voltage drives the integrator to the negative rail unless the polarity of the target current is reversed. To solve this problem, the AD8452 in-amp includes a double pole, double throw switch preceding its inputs that implements an input polarity inversion, thus correcting the sign of the output voltage (see Figure 33). This multiplexer is controlled via the MODE pin. When the MODE pin is logic high (charge mode), the in-amp gain is noninverting, and when the MODE pin is logic low (discharge mode), the in-amp gain is inverting. The polarity control of the current sense voltage to the input of the in-amp enables the integrator output voltage (VINT) to always swing positive, regardless of the polarity of the battery current.

In-Amp Offset Option

As shown in Figure 35, the in-amp reference node is connected to the ISREFL pin and ISREFH pin via an internal resistor divider. This resistor divider can be used to introduce a temperature insensitive offset to the output of the in-amp such that it always reads a voltage higher than zero for a zero differential input. Because the output voltage of the in-amp is always positive, a unipolar analog-to-digital converter (ADC) can digitize it.

When the ISREFH pin is tied to the VREF pin with the ISREFL pin grounded, the voltage at the ISMEA pin is increased by an offset voltage, V_{OS}, of 12.5 mV, guaranteeing that the output of the in-amp is always positive for zero differential inputs. Other voltage shifts can be realized by tying the ISREFH pin to an external voltage source. The gain from the ISREFH pin to the ISMEA pin is 5 mV/V. For zero offset, connect the ISREFL pin and ISREFH pin to ground.

Battery Reversal and Overvoltage Protection

The AD8452 in-amp can be configured for high-side or low-side current sensing. If the in-amp is configured for high-side current sensing (see Figure 34) and the battery is connected backward, the in-amp inputs may be held at a voltage that is below the negative power rail (AVEE), depending on the battery voltage.

To prevent damage to the in-amp under these conditions, the in-amp inputs include overvoltage protection circuitry that allows them to be held at voltages of up to 55 V from the opposite power rail. In other words, the safe voltage span for the in-amp inputs extends from AVCC − 55 V to AVEE + 55 V.

DIFFERENCE AMPLIFIER

Figure 36 is a block diagram of the difference amplifier used to monitor the battery voltage. The architecture of the difference amplifier is a subtractor amplifier with a fixed gain of 0.4 V/V. This gain value allows the difference amplifier to funnel the voltage of a 5 V battery to a level that can be read by a 5 V ADC with a 4.096 V reference.

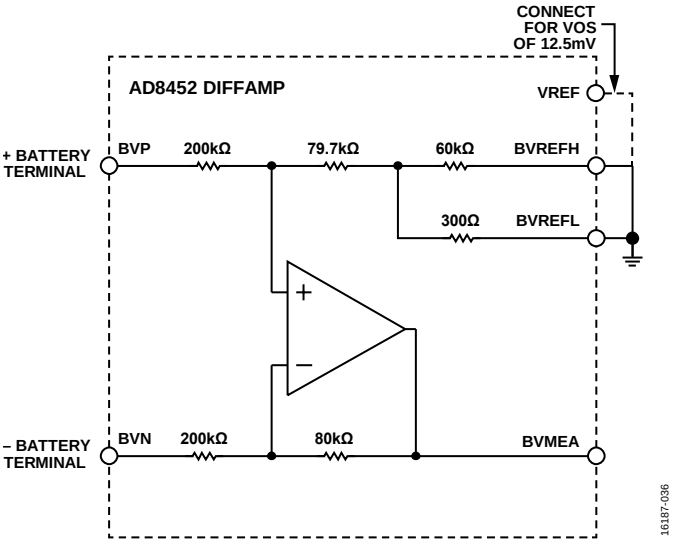

Figure 36. Difference Amplifier Simplified Block Diagram

The resistors that form the difference amplifier gain network are laser trimmed to a matching level better than ±0.1%. This level of matching minimizes the gain error and gain error drift of the difference amplifier while maximizing the CMRR of the difference amplifier. This matching also allows the controller to set a stable target voltage for the battery over temperature while rejecting the ground bounce in the battery negative terminal.

Like the in-amp, the difference amplifier can also level shift its output voltage via an internal resistor divider that is tied to the difference amplifier reference node. This resistor divider is connected to the BVREFH pin and BVREFL pin.

When the BVREFH pin is tied to the VREF pin with the BVREFL pin grounded, the voltage at the BVMEA pin is increased by 12.5 mV, guaranteeing that the output of the difference amplifier is always positive for zero differential inputs. Other voltage offsets are realized by tying the BVREFH pin to an external voltage source. The gain from the BVREFH pin to the BVMEA pin is 5 mV/V. For zero offset, tie the BVREFL pin and the BVREFH pin to ground.

CC AND CV LOOP FILTER AMPLIFIERS

The CC and CV loop filter amplifiers are high precision, low noise specialty amplifiers with very low offset voltage and very low input bias current. These amplifiers serve two purposes:

- Using external components, the amplifiers implement active loop filters that set the dynamics (transfer function) of the CC and CV loops.
- The amplifiers perform a seamless transition from CC to CV mode after the battery reaches its target voltage.

Figure 37 is a functional block diagram of the AD8452 CC and CV feedback loops for charge mode (the MODE pin is logic high). For illustrative purposes, the external networks connected to the loop amplifiers are simple RC networks configured to form single-pole inverting integrators. This type of configuration exhibits very high dc precision when the feedback loop is closed, due to the high loop gain when the feedback loop is in place. The outputs of the CC and CV loop filter amplifiers are internally connected to the VINT pins via an analog NOR circuit (minimum output selector circuit), such that they can only pull the VINT node down. In other words, the loop amplifier that requires the lowest voltage at the VINT pins is in control of the node. Thus, only one loop, CC or CV, can be in control of the system charging control loop at any given time. When the loop is inactive (open, such as when the EN pin is low), the voltage at the VINT pins must be railed at AVCC.

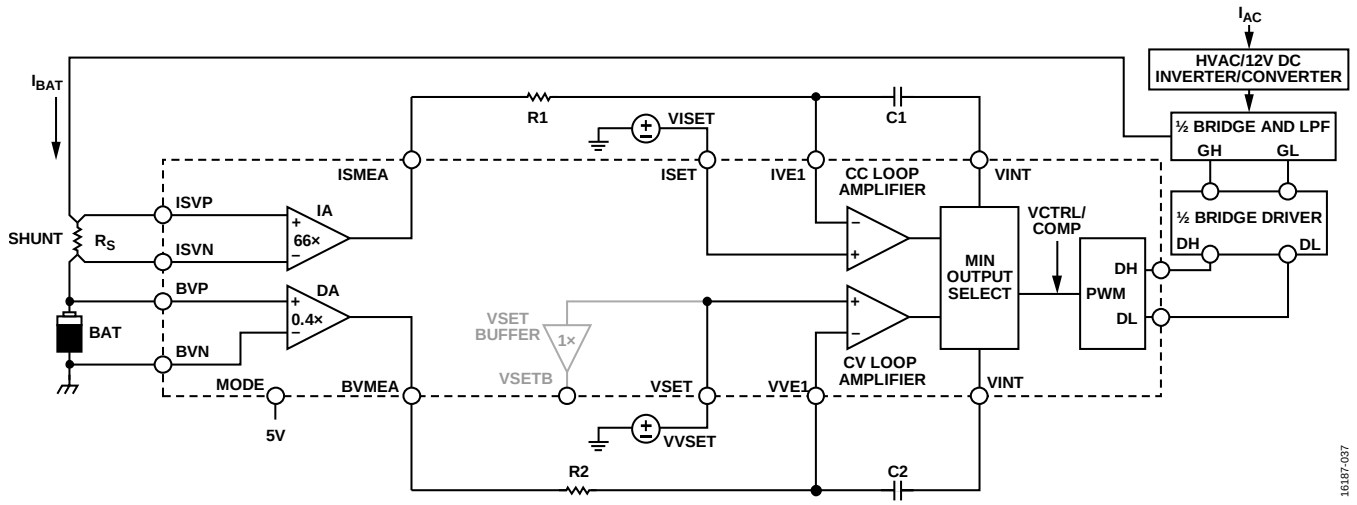

Figure 37. Functional Block Diagram of the CC and CV Loops in Charge Mode (MODE Pin High)

The VISET voltage source and VVSET voltage source set the target constant current and the target constant voltage, respectively. When the CC and CV feedback loops are in a steady state, the charging current is set at

$$I_{BAT} = \frac{V_{ISET}}{G_{IA} \times R_S}$$

where:
I_{BAT} is the steady state charging current.
G_{IA} is the in-amp gain.
R_S is the value of the shunt resistor.

The target voltage is set at

$$V_{BAT} = \frac{V_{VSET}}{G_{DA}}$$

where:
V_{BAT} is the steady state battery voltage.
G_{DA} is the difference amplifier gain.

Because the offset voltage of the loop amplifiers is in series with the target voltage sources, V_{ISET} and V_{VSET}, the high precision of these amplifiers minimizes this source of error.

Charging Lithium-Ion (Li-Ion) Cells

Charging Li-Ion cells is a demonstrably more difficult process than charging most other batteries employing recyclable technologies. The voltage margin of error between optimum storage capacity and damage caused by overcharge is around 1%. Thus, Li-Ion cells are more critical to over/undercharging than any other type battery style, rechargeable or not.

Li-Ion batteries also exhibit the highest energy density per unit of weight and volume than any other style. Such high levels of energy density make them the first choice for portable applications, large and small, from cell phones to high capacity energy storage banks. Realizing their greatest potential requires careful attention to their charge characterization signature.

Concepts of Constant Current (CC) and Constant Voltage (CV)

Batteries can be charged in constant current or constant voltage modes. Figure 38 shows a typical CC/CV multiphase charge profile for a Li-Ion battery. In the first stage of the charging process, the battery is charged with a CC of 1 A. When the battery voltage reaches a target voltage of 4.2 V, the charging process transitions such that the battery is charged with a CV of 4.2 V.

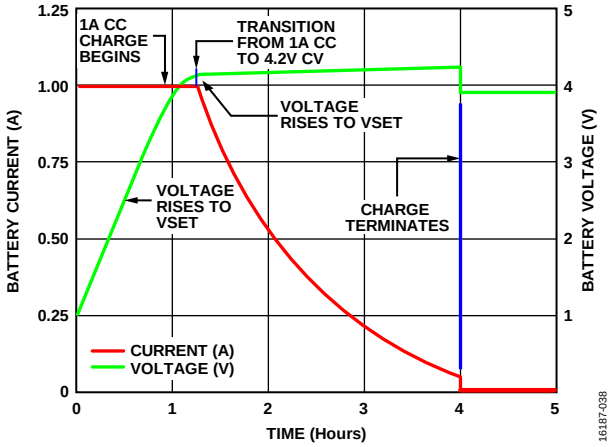

Figure 38. Representative Li-Ion Battery Charge Profile Showing Seamless CC to CV Transition

The following sequence of events describes how the AD8452 implements a typical CC/CV charging profile required for a Li-Ion battery. The scenario assumes a newly manufactured, unformed, never before charged battery, and the charge and discharge voltage and current levels along with appropriate time intervals have already been established empirically.

Energy levels (CC, CV, and time intervals are just a small percent of the battery final ratings). For this example, assume a 3.2 V 10 Ah battery is charging at IBAT = 2 A and VBAT = 4.2 V. The process begins with ISET = 66 mV and VSET = 1.68 V, configured for charge mode. Following the target VSET and ISET, the system is enabled by applying a logic high to the EN pin.

1. At turn on, the default start-up voltages at the ISMEA pin and BVMEA pin are both zero, and both integrators (loop amplifiers) begin to ramp, increasing the voltage at the VINT node. (The voltage at the VINT pin always rises following an enable regardless of mode setting).
2. As the voltage at the VINT node increases, the output current I_{BAT} from the power converter starts to rise.
3. When the I_{BAT} current reaches the target CC steady state value I_{BAT}, the battery voltage is considerably less than the target steady state value, V_{BAT}. Therefore, the CV loop amplifier forces its output voltage high enough to disconnect itself from VINT. The CC loop prevails, maintaining the target charge current until the target VBAT is achieved and the CC loop stops integrating.
4. Due to the analog OR circuit, the loop amplifiers can only pull the VINT node down. The CC loop takes control of the charging feedback loop, and the CV loop is disabled.
5. As the charging process continues, the battery voltage increases until it reaches the steady state value, V_{BAT}, and the voltage at the BVMEA pin reaches the target voltage, V_{VSET}.
6. The CV loop tries to pull the VINT node down to reduce the charging current (I_{BAT}) and prevent the battery voltage from rising any further. At the same time, the CC loop tries to keep the VINT node at its current voltage to keep the battery current at I_{BAT}.
7. Because the loop amplifiers can only pull the VINT node down due to the analog NOR circuit, the CV loop takes control of the charging feedback loop, and the CC loop is disabled.

The analog OR (minimum output selector) circuit that couples the outputs of the loop amplifiers is optimized to minimize the transition time from CC to CV control. Any delay in the transition causes the CC loop to remain in control of the charge feedback loop after the battery voltage reaches its target value. Therefore, the battery voltage continues to rise beyond V_{BAT} until the control loop transitions; that is, the battery voltage overshoots its target voltage. When the CV loop takes control of the charge feedback loop, it reduces the battery voltage to the target voltage. A large overshoot in the battery voltage due to transition delays can damage the battery; thus, it is crucial to minimize delays by implementing a fast CC to CV transition.

Figure 39 is the functional block diagram of the AD8452 CC and CV feedback loops for discharge mode (MODE logic pin is low). In discharge mode, the feedback loops operate in a similar manner as in charge mode. The only difference is in the CV loop amplifier, which operates as a noninverting integrator in discharge mode. For illustration purposes, the external networks connected to the loop amplifiers are simple RC networks configured to form single-pole integrators.

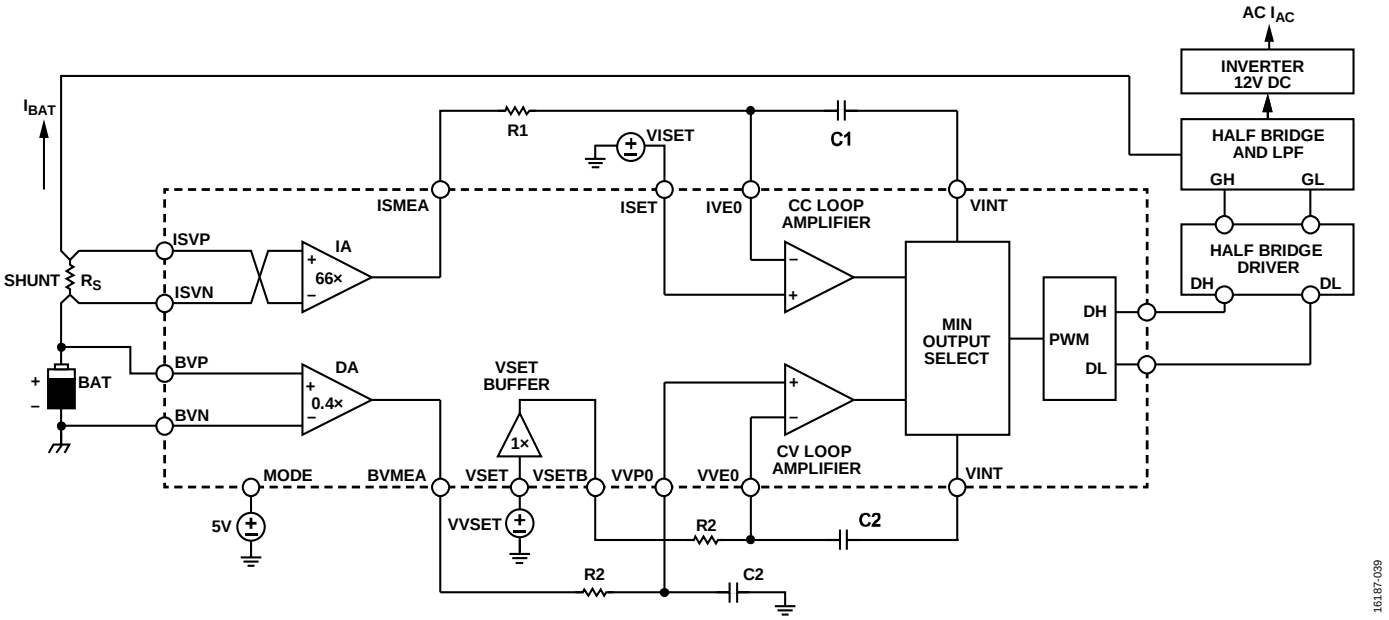

Figure 39. Functional Block Diagram of the CC and CV Loops in Discharge Mode (MODE Pin Low)

Compensation

In battery formation and test systems, the CC and CV feedback loops have significantly different open-loop gain and crossover frequencies; therefore, each loop requires its own frequency compensation. The active filter architecture of the AD8452 CC and CV loops allows the frequency response of each loop to be set independently via external components. Moreover, due to the internal switches in the CC and CV amplifiers, the frequency response of the loops in charge mode does not affect the frequency response of the loops in discharge mode.

Unlike simpler controllers that use passive networks to ground for frequency compensation, the AD8452 allows the use of feedback networks for its CC and CV loop filter amplifiers. These networks enable the implementation of both proportional differentiator (PD) Type II and proportional integrator differentiator (PID) Type III compensators. Note that in charge mode, both the CC and CV loops implement inverting compensators, whereas in discharge mode, the CC loop implements an inverting compensator, and the CV loop implements a noninverting compensator. As a result, the CV loop in discharge mode includes an additional amplifier, the VSET buffer, to buffer the VSET node from the feedback network VINT buffer.

CHARGE AND DISCHARGE CONTROL

Conditions to Charge and Discharge a Battery

Battery charging and discharging requires separate paradigms in terms of the analog requirements and the PWM configurations. These paradigms are based on manufacturer provided information, most importantly the C rating where C is simply the battery capacity expressed in ampere hours. For example, if the battery is C rated as 10 Ah, and the charge rate is specified as 0.2 C, the charge current is 2 A for a duration of 5 hours.

To charge, the applied voltage must be greater than the voltage of the battery under charge and the current must not exceed the manufacturer's specification, usually expressed as a fraction of the full C rating. When discharging, the opposite conditions apply; the discharge voltage must be less than the unloaded battery voltage, and the current flows out of the battery, reversing the polarity of the shunt voltage.

Multiple charge/discharge sequences can last for days at a time before the battery achieves its optimum storage capacity, and the charge/discharge currents and voltages must be accurately monitored.

MODE Pin

The MODE pin is a logic level input that selects charge with a logic high (V_{MODE} > 2 V) or discharge with a logic low (V_{MODE} < 0.8 V). All the analog and PWM circuitry for charging and discharging of the battery is configured and is latched in when the EN pin goes high.

The MODE pin controls the polarity of the internal analog loop and the DH/DL sequence. In charge mode, DH precedes DL; in discharge mode, DL precedes DH.

When the AD8452 operates in charge mode, the PWM operates in a buck configuration. In discharge mode, the configuration changes to boost. See Figure 40 and Figure 41 for the AD8452 DH and DL behavior in each mode. On the rising edge of EN, the state of the MODE pin is latched, preventing the mode of operation from being changed while the device is enabled. To change between charge and discharge modes of operation, shut down or disable the AD8452, adjust the MODE pin to change the operating mode, and reenable the system.

The operating mode can be changed when the EN pin is driven low, the $\overline{\text{FAULT}}$ pin is driven low, or the AD8452 is disabled via a TSD event or UVLO condition. On the rising edge of the $\overline{\text{FAULT}}$ control signal, the state of the MODE pin is latched, preventing the mode of operation from being changed while the device is enabled.

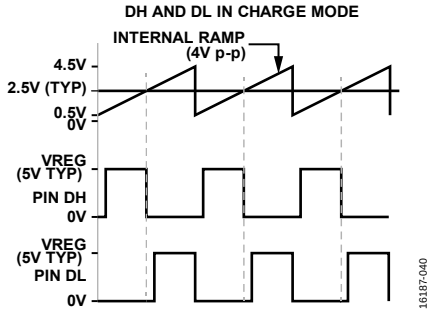

Figure 40. DH and DL Output Waveforms for Charge Mode

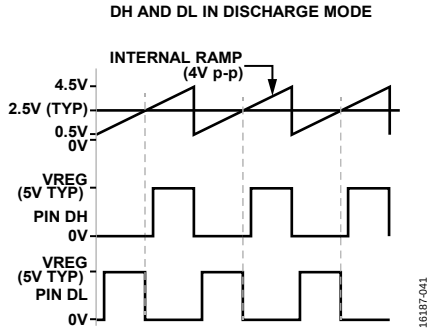

Figure 41. DH and DL Output Waveforms for Discharge Mode

INPUT AND OUTPUT SUPPLY PINS

The AD8452 has five power supply input pins, a pair each of the internally connected AVCC pin and AVEE pin for the analog section and Input VIN for the PWM section. The maximum supply voltage for the VIN pin is 60 V; if operating with an input voltage greater than 50 V, see Figure 42 for recommended additional input filtering.

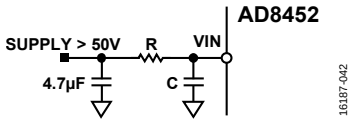

Figure 42. Recommended Filter Configuration for Input Voltages Greater Than 50 V

For optimum protection from switching and other ambient noise, all of these supply pins must be bypassed to ground with high quality ceramic capacitors (X7R or better), located as near as possible to the device.

VREG is an internal 5 V supply that powers the control circuitry including all the current sources for user selected PWM features. It is active as long as VIN is above the internal UVLO (5.75 V typical). VREG may be used as a pull-up voltage for the MODE, SYNC, DMAX, and $\overline{\text{FAULT}}$ pins and any other external pull-ups as long as the additional current does not exceed 5 mA. Bypass the VREG pin to ground with a 1 µF ceramic capacitor.

SHUTDOWN

The EN input turns the AD8452 PWM section on or off and can operate from voltages up to 60 V. When the EN voltage is less than 1.2 V (typical), the PWM shuts down, and DL and DH are driven low. When the PWM shuts down, the VIN supply current is 15 µA (typical). When the EN voltage is greater than 1.26 V (typical), the PWM is enabled.

In addition to the EN pin, the PWM is disabled via a fault condition flagged by a TSD, an undervoltage lockout (UVLO) condition on VIN, or an external fault condition via the $\overline{\text{FAULT}}$ pin.

When changing the operating mode, it is necessary to disable the AD8452 by setting the EN pin low.

UNDERVOLTAGE LOCKOUT (UVLO)

The UVLO function prevents the PWM from turning on until voltage $V_{IN} \geq 5.75$ V (typical). The UVLO enable state has ~410 mV of hysteresis to prevent the PWM from turning on and off repeatedly if the supply voltage to the VIN pin ramps slowly. The UVLO disables the PWM when V_{IN} drops below 5.34 V (typical).

SOFT START

The AD8452 has a programmable soft start that prevents output voltage overshoot during startup. When the EN pin goes high, an internal 5 µA current source connected to the SS pin begins charging the external capacitor, C_{SS}, that is connected to VREG (5 V), creating a linear voltage ramp (V_{SS}) that controls several time sensitive PWM control functions.

When $V_{SS} < 0.52$ V (typical), the DH and DL logic outputs are both low. When V_{SS} exceeds 0.52 V (typical), nonsynchronous switching is enabled, either the DH pin or the DL pin logic output become active, and the PWM duty cycle gradually increases. When $V_{SS} > 4.5$ V (typical), synchronous switching is enabled (see Figure 43 and Figure 44).

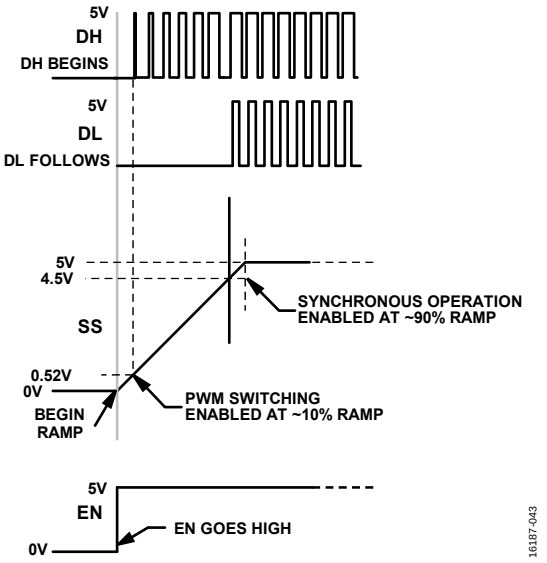

Figure 43. DH and DL Sequence in Charge Mode

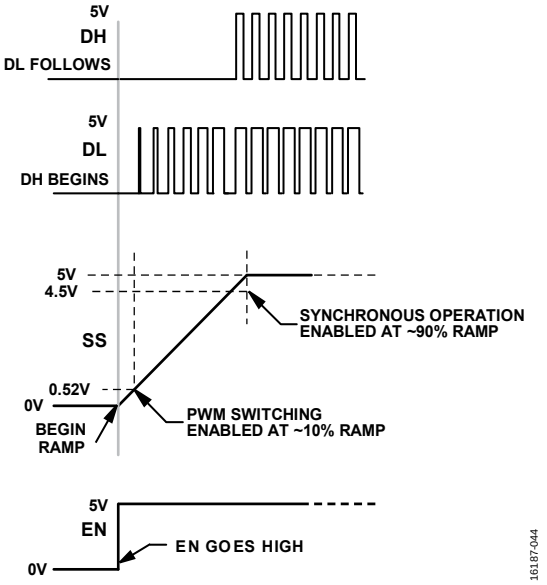

Figure 44. DH and DL Sequence in Discharge Mode

In conjunction with the MODE pin, the VSS ramp also establishes when the DH and DL, logic outputs and thus the output FET switches, become active. In charge mode (Mode high), the pulse sequence at the DH pin precedes that at the DL pin. Conversely, in discharge mode, the sequence is reversed and the DL pin precedes the DH pin.

The duty cycle of the DH and DL drive pins increase in proportion to the ramp level, reducing the output voltage overshoot during startup (see the Selecting CSS section).

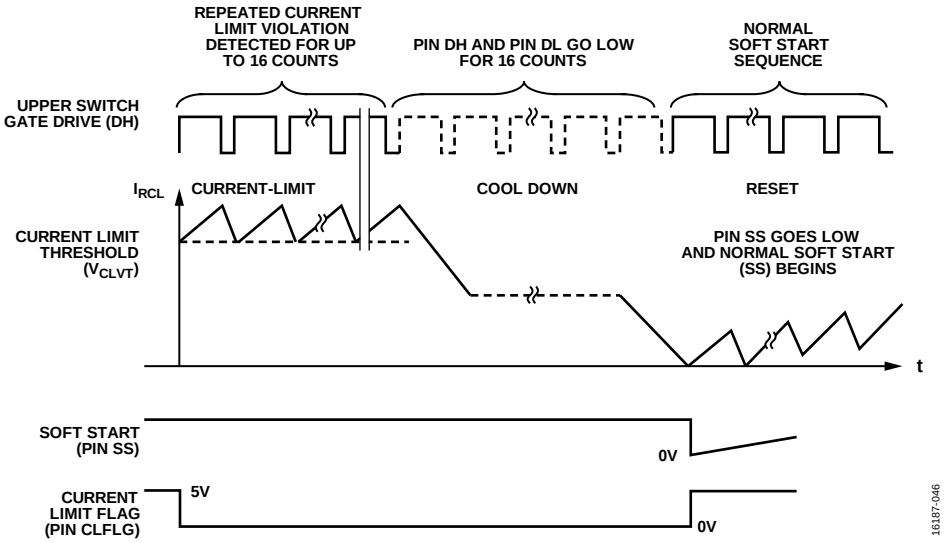

Figure 45. Recovery from a Peak Current-Limit Event

PWM DRIVE SIGNALS

The AD8452 has two 5 V logic level output drive signals, DH and DL, that are compatible with MOSFET drivers such as the ADuM3223 or ADuM7223. The DH and DL drive signals synchronously turn on and off the high-side and low-side switches driven from the external driver. The AD8452 provides a resistor programmable dead time to prevent the DH pin and DL pin from transitioning at the same time, as shown in Figure 46. Connect a resistor from the DT pin to ground to program the dead time.

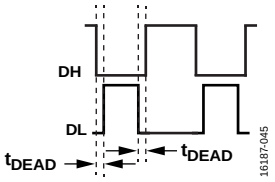

Figure 46. Dead Time (t_{DEAD}) Between DH and DL Transitions

When driving capacitive loads with the DH and DL pins, a 20 Ω resistor must be placed in series with the capacitive load to reduce ground noise and ensure signal integrity.

PEAK CURRENT PROTECTION AND DIODE EMULATION (SYNCHRONOUS)

Peak Current-Limit Detection

The AD8452 provides an adjustable peak current limit for fast response to overcurrent conditions. When the peak current limit is reached, the main switching FET is turned off, limiting the peak current for the switching cycle and the CLFLG pin is driven low. When the peak inductor current exceeds the programmed current limit for more than 16 consecutive clock cycles, a peak current overload condition occurs. If the current overload condition exists for less than 16 consecutive cycles, the counter is reset to zero and the peak current overload condition is avoided. During the peak current-limit condition, the SS capacitor is discharged to ground, and the drive signals (DL and DH) are disabled for the next 16 clock cycles to allow the FETs to cool down (current overload mode). When the 16 clock cycles expire, the AD8452 restarts with a new soft start cycle. Figure 45 shows the sequence for a peak current-limit event.

As shown in Figure 47, the inductor current, I_{RCL}, is sensed by a low value resistor, R_{CL} (for example, 5 mΩ), placed between the output inductor and capacitor. The I_{RCL} current is bidirectional, depending on whether the AD8452 is in charge or discharge mode. The MODE pin automatically controls the polarity of the voltage sampled across R_{CL} to set the peak current-limit detection. Because the average output voltage at the junction of the low-pass filter inductor and capacitor is equal to the battery potential, the common-mode voltage is rejected, leaving only the desired differential result.

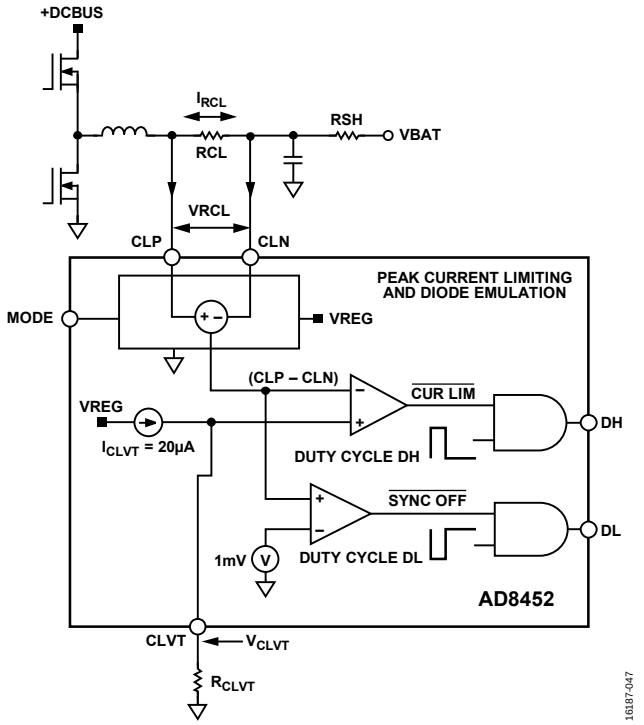

Figure 47. Peak Current Limiting and Diode Emulation Block Diagram

The threshold voltage for the peak current comparator is user adjustable by connecting a resistor from the current-limit voltage threshold (CLVT pin) to ground. The AD8452 generates this voltage from a 20 µA current source (see the Select RCL and R_{CLVT} for the Peak Current Limit section).

Diode Emulation/Synchronous Mode Operation

The RCL current sense resistor is also used to detect and control current reversal. When the voltage across RCL drops to −5 mV ≤ VRCL ≤ +5 mV (for charge and discharge modes) during the synchronous FET switching cycle, the synchronous FET is turned off to stop the flow of reverse current.

Information on how to set the current limit and the current sense resistor RCL is available in the Applications Information section.

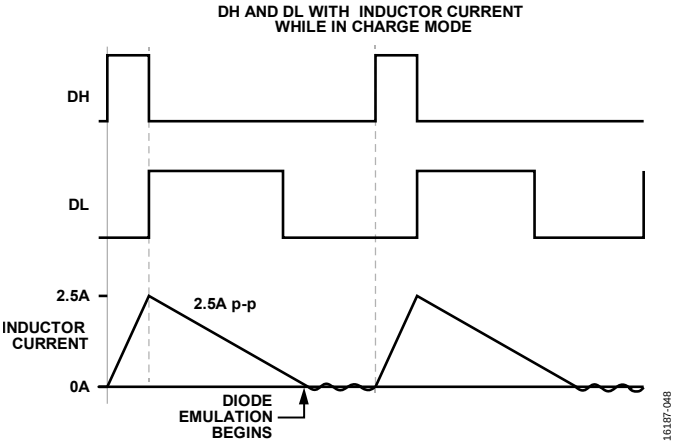

Figure 48. Diode Emulation in Charge Mode, Low Charge Current Required

FREQUENCY AND PHASE CONTROL

The FREQ, SYNC, and SCFG pins determine the source, frequency, and synchronization of the clock signal that operates the PWM control of the AD8452.

Internal Frequency Control

The AD8452 frequency can be programmed with an external resistor connected between FREQ and ground. The frequency range can be set from a minimum of 50 kHz to a maximum of 300 kHz. If the SCFG pin is tied to VREG, forcing $V_{SCFG} \geq 4.53$ V (typical), or if the SCFG pin is left floating, the SYNC pin is configured as an output, and the AD8452 operates at the frequency set by R_{FREQ}, which outputs from the SYNC pin through the open-drain device. The output clock of the SYNC pin operates with a 50% (typical) duty cycle. In this configuration, the SYNC pin can synchronize other switching regulators in the system to the AD8452. When the SYNC pin is configured as an output, an external pull-up resistor is needed from the SYNC pin to an external supply. The VREG pin of the AD8452 can be used as the external supply rail for the pull-up resistor.

External Frequency Control

When $V_{SCFG} \leq 0.5$ V (typical), the SYNC pin is configured as an input, the AD8452 synchronizes to the external clock applied to the SYNC pin, and the AD8452 operates as a slave device. This synchronization allows the AD8452 to operate at the same switching frequency with the same phase as other switching regulators or devices in the system. When operating the AD8452 with an external clock, select R_{FREQ} to provide a frequency that approximates but is not equal to the external clock frequency, which is further explained in the Applications Information section.

Operating Frequency Phase Shift

When the voltage applied to the SCFG pin is $0.65 \text{ V} < V_{SCFG} < 4.25$ V, the SYNC pin is configured as an input, and the AD8452 synchronizes to a phase shifted version of the external clock applied to the SYNC pin. To adjust the phase shift, place a resistor (R_{SCFG}) from SCFG to ground. The phase shift can be used to reduce the input supply ripple for systems containing multiple switching power supplies.

MAXIMUM DUTY CYCLE

Referring to Figure 52, the maximum duty cycle of the AD8452 can be externally programmed for any value between 0% and 97% by installing a resistor from the DMAX pin to ground. The maximum duty cycle defaults to 97% if the DMAX pin is left floating or connected to 5 V (the VREG pin).

FAULT INPUT

The AD8452 $\overline{\text{FAULT}}$ pin is a logic level input intended to be driven by an external fault detector. The external fault signal stops PWM operation of the system to avoid damage to the application and components. When a voltage of less than 1.0 V (typical) is applied to the $\overline{\text{FAULT}}$ pin, the AD8452 is disabled, driving the DL and DH PWM drive signals low. The soft start capacitor (C_{SS}) is discharged through a switch until a voltage ≥1.2 V is applied to the $\overline{\text{FAULT}}$ pin, and the AD8452 resumes switching. The $\overline{\text{FAULT}}$ pin sustains voltages as high as 60 V.

THERMAL SHUTDOWN (TSD)

The AD8452 has a TSD protection circuit. The TSD triggers and disables switching when the junction temperature reaches 150°C (typical). While in TSD, the DL and DH signals are driven low, the C_{SS} capacitor discharges to ground, and VREG remains high. Normal operation resumes when the junction temperature decreases to 135°C (typical).

APPLICATIONS INFORMATION

ANALOG CONTROLLER

This section describes how to use the AD8452 in the context of a battery formation and test system and includes design examples.

FUNCTIONAL DESCRIPTION

The AD8452 is a precision analog front end and controller for battery formation and test systems. Such systems are differentiated from typical battery charger or battery management systems by the high level of voltage and current measurement precision required to optimize Li-Ion batteries for capacity and energy density. Figure 49 shows the analog signal path of a simplified switching battery formation and test system using the AD8452 controller.

The AD8452 is suitable for systems that test and form Li-Ion and the legacy NiCad and NiMH electrolyte batteries. The output is a digital format (PWM), designed to drive a switching power output stage.

The AD8452 includes the following blocks (see Figure 33 and the Theory of Operation section for more information):

- A fixed gain in-amp that senses low-side or high-side battery current.
- A fixed gain difference amplifier that measures the terminal voltage of the battery.
- Two loop filter error amplifiers that receive the battery target current and voltage and establish the dynamics of the CC and CV feedback loops.
- A minimum output selector circuit that combines the outputs of the loop filter error amplifiers to perform automatic CC to CV switching.
- A PWM with high- and low-side half bridge logic level outputs suitable for driving a MOSFET gate driver.
- A 2.5 V reference whose output node is the VREF pin.
- A logic input pin (MODE) that switches the controller configuration between charge mode (high) and discharge mode (low).

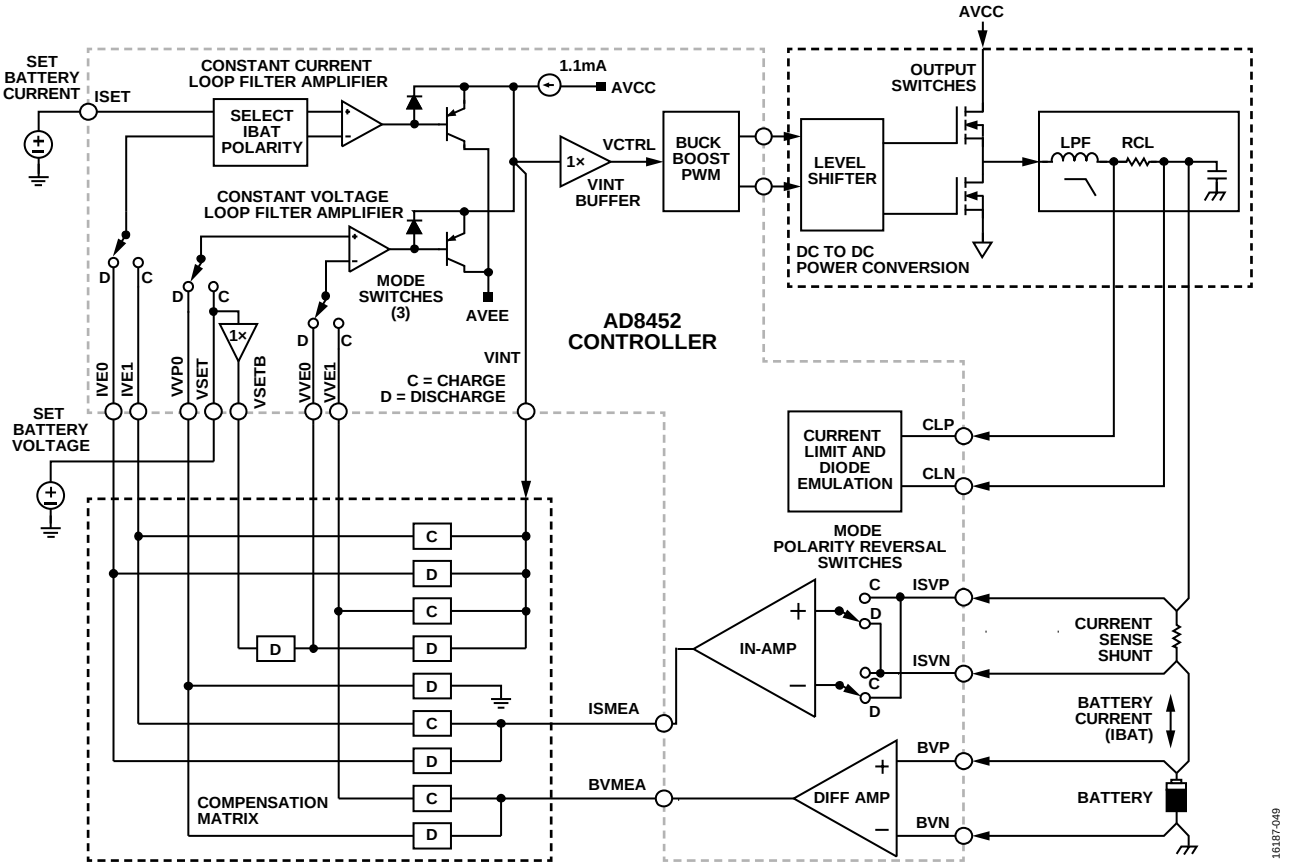

Figure 49. Complete Signal Path of a Battery Test or Formation System Suitable for Li-Ion Batteries

POWER SUPPLY CONNECTIONS

The AD8452 requires three analog power supplies (AVCC, VIN, and AVEE). Two separate ground pins, AGND and DGND, provide options for isolating analog and digital ground paths in high noise environments. In most applications, however, these two pins can be connected to a common ground.

AVCC and AVEE power all the analog blocks, including the in-amp, difference amplifier, and op amps. VIN powers an internal 5 V LDO regulated supply (VREG) that powers the mode logic and PWM.

The rated absolute maximum value for AVCC − AVEE is 36 V, and the minimum operating AVCC and AVEE voltages are +10 V and −26 V, respectively. Due to the high PSRR of the AD8452 analog circuitry, the AVCC pin can be connected directly to the high current power bus (the input voltage of the power converter) without risking injection of supply noise to the controller outputs.

A commonly used power supply combination is +12 V for AVCC and −5 V for AVEE. The 12 V rail for AVCC provides enough headroom to the in-amp such that it can be connected in a high-side current sensing configuration. The −5 V AVEE rail allows the difference amplifier output to become negative if the battery under test (BUT) is accidentally connected in reverse. The condition can be detected by monitoring BVMEA for reverse voltage.

It is good practice to connect decoupling capacitors to all the supply pins. A 1 µF ceramic capacitor in parallel with a 0.1 µF capacitor is recommended.

CURRENT SENSE IN-AMP CONNECTIONS

For a description of the instrumentation amplifier, see the Theory of Operation section, Figure 33, and Figure 35. The in-amp fixed gain is 66 V/V.

Current Sensors

Two common options for current sensors are isolated current sensing transducers and shunt resistors. Isolated current sensing transducers are galvanically isolated from the power converter and are affected less by the high frequency noise generated by switch mode power supplies. Shunt resistors are far less expensive, easier to deploy and generally more popular.

If a shunt resistor sensor is used, a 4-terminal, low resistance shunt resistor is recommended. Two of the four terminals conduct the battery current, whereas the other two terminals conduct virtually no current. The terminals that conduct no current are sense terminals that are used to measure the voltage drop across the resistor (and, therefore, the current flowing through it) using an amplifier such as the in-amp of the AD8452. To interface the in-amp with the current sensor, connect the sense terminals of the sensor to the ISVP pin and ISVN pin of the AD8452 (see Figure 50).

Optional Low-Pass Filter

Due to the extremely high impedance of the instrumentation amplifier used for a current shunt amplifier, power stage switching noise can become an issue if the input circuitry is in close proximity to the power stage components. This issue is mitigated by shielding the input leads with ground potential shielding designed into the PCB artwork and keeping the input leads close together between the current sense shunt and the input pins.

Connecting an external differential low-pass filter between the current sensor and the in-amp inputs is also an effective method to reduce the injection of switching noise into the in-amp (see Figure 50).

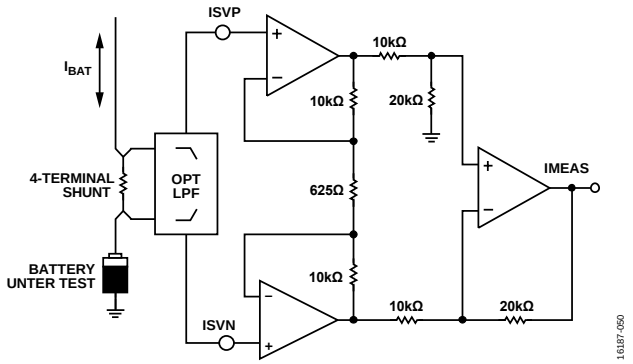

Figure 50. 4-Terminal Shunt Resistor Connected to the Current Sense In-Amp

VOLTAGE SENSE DIFFERENTIAL AMPLIFIER CONNECTIONS

For a description of the difference amplifier, see the Theory of Operation section, Figure 33, and Figure 36. The gain of the difference amplifier is fixed at 0.4×. For AD8452 applications in large installations, the best practice is to connect each battery with a dedicated pair of conductors to avoid accuracy issues. This recommendation applies whether using wiring harnesses or a distributed PCB approach (mother/ daughter boards) to the system design.

BATTERY CURRENT AND VOLTAGE CONTROL INPUTS (ISET AND VSET)

The voltages at the ISET pin and the VSET pin set the target battery current and voltage (CC mode and CV mode) and require highly accurate and stable voltages to drive them. For a locally controlled system, a low noise LDO regulator such as the ADP7102ARDZ-5.0 is appropriate. For large scale computer controlled systems, a digital-to-analog converter (DAC) such as the dual channel, 16-bit AD5689RBRUZ is suitable for these purposes. In either event, the source output voltage and the in-amp and difference amplifier reference pins (ISREFH/ISREFL and BVREFH/BVREFL, respectively) must use the same ground reference. For example, if the in-amp reference pins are connected to AGND, the voltage source connected to ISET must also be referenced to AGND. In the same way, if the difference amplifier reference pins are connected to AGND, the voltage source connected to VSET must also be referenced to AGND.

In constant current mode, when the CC feedback loop is in a steady state, the ISET input sets the battery current as follows:

$$I_{BAT} = \frac{V_{ISET}}{G_{IA} \times R_S} = \frac{V_{ISET}}{66 \times R_S}$$

where:
G_{IA} is the in-amp gain.
R_S is the value of the current sense resistor.

Note that the system accuracy is highly dependent on the physical properties of the shunt as well as the in-amp G_{IA} and V_{ISET} values. When selecting a shunt, be sure to consider temperature performance as well as basic precision.

In constant voltage mode, when the CV feedback loop is in a steady state, the VSET input sets the battery voltage according to the equation:

$$V_{BAT} = \frac{V_{VSET}}{G_{DA}} = \frac{V_{VSET}}{0.4}$$

where G_{DA} is the difference amplifier gain.

Therefore, the accuracy and temperature stability of the formation and test system are not only dependent on the accuracy and stability of the AD8452 but also on the accuracy external components.

LOOP FILTER AMPLIFIERS

The AD8452 has two loop filter amplifiers, also known as error amplifiers (see Figure 49). One amplifier is for constant current control (CC loop filter amplifier), and the other amplifier is for constant voltage control (CV loop filter amplifier). The outputs of these amplifiers are combined using a minimum output selector circuit to perform automatic CC to CV switching.

Table 9 lists the inputs of the loop filter amplifiers for charge mode and discharge mode.

Table 9. Integrator Input Connections

Feedback Loop Function	Reference Input	Feedback Terminal
Control the Current While Discharging a Battery	ISET	IVE0
Control the Current While Charging a Battery	ISET	IVE1
Control the Voltage While Discharging a Battery	VSET	VVE0
Control the Voltage While Charging a Battery	VSET	VVE1

The CC and CV amplifiers in charge mode and the CC amplifier in discharge mode are inverting integrators, whereas the CV amplifier in discharge mode is a noninverting integrator. Therefore, the CV amplifier in discharge mode uses an extra amplifier, the VSET buffer, to buffer the VSET input pin (see Figure 33). In addition, the CV amplifier in discharge mode uses the VVP0 pin to couple the signal from the BVMEA pin to the integrator.

SELECTING CHARGE OR DISCHARGE OPTIONS

To operate the AD8452 in discharge mode (including energy recycling) mode, apply a voltage less than 1.05 V (typical) to the MODE pin. To operate the AD8452 in charge mode, drive the MODE pin high, greater than 1.20 V (typical). The state of the MODE pin can change when the AD8452 is shut down via the $\overline{\text{EN}}$ pin or via an external fault condition signaled on the $\overline{\text{FAULT}}$ pin, a TSD event, or an UVLO condition.

SELECT RCL AND R_{CLVT} FOR THE PEAK CURRENT LIMIT

Figure 47 is the block diagram for peak current limit and diode emulation. Note that the current-limit sense resistor is floating between the output filter inductor and capacitor.

The current generated by a fault condition defines the peak current. In turn, the peak current equals the sum of the average current (rated battery charging or discharging current) and the peak incremental inductor current:

$$I_{PK} = I_{AVG} + I_{MAX}$$

where:
I_{AVG} is the battery charge/discharge current.
I_{LMAX} is the inductor saturation current.

Typically, the peak current level is set to the sum of the average current and the value of the inductor saturation current.

Use the following equation to calculate the minimum current-limit sense resistor value:

$$R_{CL\,MIN}\,(\Omega) = \frac{50\text{ mV}}{I_{PK}\,(A)} \quad (2)$$

where:
I_{PK} is the desired peak current limit in A.
$R_{CL\,MIN}$ is the minimum current limit sense resistor value in Ω.
50 mV is the minimum IR drop across RCL for sufficient noise immunity during operation.

Select the next higher standard resistor value for RCL.

Next, the value for R_{CLVT} is calculated using the following equation:

$$R_{CLVT}\,(\Omega) = \left(\frac{I_{PK} \times R_{CL}}{I_{CLVT}}\right) \quad (3)$$

where:
R_{CLVT} is the current-limit threshold voltage resistor value in Ω.
I_{PK} is the desired peak current limit in A.
R_{CL} is the current-limit sense resistor value in Ω.
I_{CLVT} is the CLVT pin current (21 µA typical)

The AD8452 is designed so that the peak current limit is the same in both the buck mode and the boost mode of operation. A 1% or better tolerance for the R_{CL} and R_S resistors is recommended.

SETTING THE OPERATING FREQUENCY AND PROGRAMMING THE SYNCHONIZATION PIN

Operating modes of the AD8452 clock rely on the state of the FREQ pin and one of three possible voltage options applied to the SCFG pin. See Table 10 for a summary of synchronization options.

When the voltage at the SCFG pin exceeds 4.53 V (or the pin is floating and internally connected to VREG), the AD8452 operates at the frequency set by R_{FREQ}. The SYNC pin is configured as an output, displaying a clock signal at the programmed frequency. In this state, the clock voltage at the SYNC pin can be used as a master clock for synchronized applications.

If V_{SCFG} is ≤0.5 V, the SYNC pin is configured as an input, and the AD8452 operates as a slave device. As a slave device, the AD8452 synchronizes to the external clock applied to the SYNC pin. If the voltage applied to the SCFG pin is 0.65 V < V_{SCFG} < 4.25 V, and a resistor is connected between SCFG and ground, the SYNC pin is configured as an input, and the AD8452 synchronizes to a phase shifted version of the external clock applied to the SYNC pin.

Whether operating the AD8452 as a master or as a slave device, carefully select R_{FREQ} using the equations in the following sections.

Select R_{FREQ} for Standalone or Master Clock

Whether master or slave, the clock frequency can be selected graphically or by applying Equation 4.

Figure 26 shows the relationship between the $R_{FREQ\ (MASTER)}$ value and the programmed switching frequency. Simply identify the desired clock frequency on Axis f_{SET}, and read the corresponding resistor value on Axis $R_{FREQ\ (MASTER)}$.

To calculate the $R_{FREQ\ (MASTER)}$ value for a desired master clock synchronization frequency, use the following equation:

$$R_{FREQ\ (MASTER)}(\text{k}\Omega) = \frac{10^4}{f_{SET}(\text{kHz})} \quad (4)$$

where $R_{FREQ\ (MASTER)}$ is the resistor in kΩ to set the frequency for the master device, and f_{SET} is the switching frequency in kHz.

Selecting R_{FREQ} for a Slave Device

To configure the AD8452 as a slave device, drive V_{SCFG} < 4.53 V, and the device operates at the frequency of an external clock applied to the SYNC pin. To ensure proper synchronization, select R_{FREQ} to set the frequency to a value slightly slower than that of the master clock by using the following equation:

$$R_{FREQ\ (SLAVE)} = 1.11 \times R_{FREQ\ (MASTER)} \quad (5)$$

where $R_{FREQ\ (SLAVE)}$ is the resistor value that appropriately scales the frequency for the slave device, 1.11 is the R_{FREQ} slave to master ratio for synchronization and $R_{FREQ\ (MASTER)}$ is the resistor value of the master clock applied to the SYNC pin.

The frequency of the slave device is set to a frequency slightly lower than that of the master device to allow the digital synchronization loop of the AD8452 to synchronize to the master clock period. The slave device can synchronize to a master clock frequency running from 2% to 20% higher than the slave clock frequency. Setting $R_{FREQ\ (SLAVE)}$ to 1.11× larger than $R_{FREQ\ (MASTER)}$ runs the synchronization loop in approximately the center of the adjustment range.

Programming the External Clock Phase Shift

If a phase shift is not required for slave devices, connect the SCFG pin of each slave device to ground. For devices that require a phase shifted version of the synchronization clock that is applied to the SYNC pin of the slave devices, connect a resistor (R_{SCFG}) from SCFG to ground to program the desired phase shift. To determine the R_{SCFG} value for a desired phase shift (φ_{SHIFT}), start by calculating the frequency of the slave clock (f_{SLAVE}).

$$f_{SLAVE}(\text{kHz}) = \frac{10^4}{R_{FREQ\ (SLAVE)}} \quad (6)$$

Next, calculate the period of the slave clock.

$$t_{SLAVE}\ (\mu\text{s}) = \frac{1}{f_{SLAVE}\ (\text{kHz})} \times 10^3 \quad (7)$$

where:
t_{SLAVE} is the period of the slave clock in µs.
f_{SLAVE} is the frequency of the slave clock in kHz.

Next, determine the phase time delay (t_{DELAY}) for the desired phase shift (φ_{SHIFT}) using the following equation:

$$t_{SLAVE}\ (\mu\text{s}) = \frac{\varphi_{SHIFT} \times t_{SLAVE}\ (\mu\text{s})}{360} \quad (8)$$

where:
t_{DELAY} is the phase time delay in µs.
φ_{SHIFT} is the desired phase shift.

Lastly, use the following equation to calculate t_{DELAY}:

$$R_{SCFG}\ (\text{k}\Omega) = 0.45 \times R_{FREQ\ (SLAVE)}\ (\text{k}\Omega) + 50 \times t_{DELAY}\ (\mu\text{s}) \quad (9)$$

where:
R_{SCFG} is the corresponding resistor for the desired phase shift in kHz. See Figure 27 for the R_{SCFG} vs. t_{DELAY} graph.

When using the phase shift feature, connect a capacitor of 47 pF or greater in parallel with R_{SCFG}.

Alternatively, the SCFG pin can be controlled with a voltage source but if an independent voltage source is used, ensure V_{SCFG} ≤ VREG under all conditions. When the AD8452 is disabled via UVLO, VREG = 0 V, and the voltage source must be adjusted accordingly to ensure V_{SCFG} ≤ VREG.

Table 10. Summary of Synchronization Options of the AD8452

DC Control Bias Applied to the SCFG Pin (V)	SYNC Pin Input/Output State and Delay Options		Master/Slave Sync
	Input/ Output	Delay	
0 to 0.50	Input	No delay	Slave
0.65 to 4.25	Input	0 µs to 7.5 µs delay (see Figure 27)	Slave
4.53 to 5	Output	No delay	Master

Figure 51 shows the internal voltage ramp of the AD8452. The voltage ramp is a well controlled 4 V p-p.

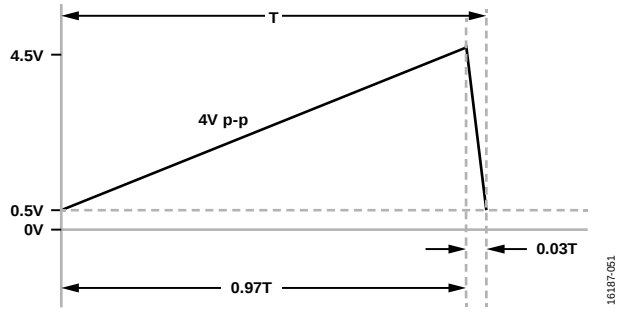

Figure 51. Internal Voltage Ramp

Programming the Dead Time

To adjust the dead time on the synchronous DH and DL outputs, connect a resistor (R_{DT}) from DT to DGND and bypass with a 47 pF capacitor. Select R_{DT} for a given dead time using Figure 28 or calculate R_{DT} using the following equations. To create a single equation for R_{DT}, combine the equations for V_{DT} and R_{DT}.

$$V_{DT}\,(V) = \frac{I_{DT} \times (t_{DEAD}\,(\text{ns}) - 10.00)}{3.76} \quad (10)$$

$$R_{DT} = \frac{V_{DT}}{I_{DT}} \quad (11)$$

where:
V_{DT} is the DT pin programming voltage.
I_{DT} is the 20 µA (typical) internal current source.
t_{DEAD} is the desired dead time in ns.
R_{DT} is the resistor value in kΩ for the desired dead time.

To calculate R_{DT} for a given t_{DEAD}, the resulting equation used is

$$R_{DT}\,(k\Omega) = \frac{t_{DEAD}\,(\text{ns}) - 10.00}{3.76} \quad (12)$$

PROGRAMMING THE MAXIMUM DUTY CYCLE

The AD8452 is designed with a 97% (typical) maximum internal duty cycle. By connecting a resistor from DMAX to ground, the maximum duty cycle can be programmed at any value from 0% to 97% by using the following equation:

$$D_{MAX}\,(\%) = \frac{21.5 \times V_{FREQ} \times R_{DMAX}}{R_{FREQ}} - 10.5 \quad (13)$$

where:
D_{MAX} is the programmed maximum duty cycle.
V_{FREQ} = 1.252 V (typical).
R_{DMAX} is the value of the resistance used to program the maximum duty cycle.
R_{FREQ} is the frequency set resistor used in the application.

The DMAX current source is equivalent to the programmed current of the FREQ pin:

$$I_{DMAX} = I_{FREQ} = \frac{V_{FREQ}}{R_{FREQ}} \quad (14)$$

where $I_{DMAX} = I_{FREQ}$, the current programmed on the FREQ pin.

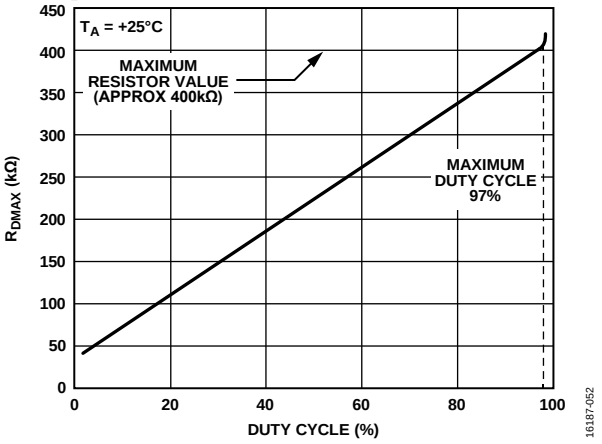

Figure 52. R_{DMAX} vs. Duty Cycle, R_{FREQ} = 100 kΩ, V_{INT} = 5 V

The default maximum duty cycle of the AD8452 is 97% (typical) even if the value of R_{DMAX} indicates a larger percentage. If a 97% internal maximum duty cycle is sufficient for the application, the DMAX pin may be pulled to VREG or left floating.

The C_{DMAX} capacitor connected from the DMAX pin to the ground plane must be 47 pF or greater.

SELECTING C_{SS}

There are instances where it is useful to adjust the soft start delay to fit specific applications, for example, to accommodate charge or discharge battery characteristics, and the state of charge. The soft start delay is user adjustable by selecting the value of Capacitor C_{SS}.

When the EN pin goes high, and with a capacitor connected to the SS pin, a 5 µA current source, I_{SS}, becomes active and begins charging C_{SS}, initiating a timing ramp determined by the following equation:

$$I = C\,dV/dt$$

In the limit, dV = 5 V and, because the applied current is 5 µA, C_{SS} can be calculated for any desired time by transposing the terms of the equation. Therefore,

$$C_{SS} = I(dt/\mathrm{d}V)$$

For a 1 sec delay, C_{SS} = 5 e − 6(1/5) or 1 µF, a 0.5 sec delay requires 0.5 µF, and so on.

ADDITIONAL INFORMATION

The following reference materials provide additional insight and practical information that supplement the data sheet material contained herein:

- AN-1319 Application Note, *Compensator Design for a Battery Charge/Discharge Unit Using the AD8450 or the AD8451*.
- AD8452-EVALZ (UG-1180), *Universal Evaluation Board for the AD8452*. The AD8452-EVALZ has an embedded AD8452 with reference and test loops and is designed for product evaluation and experimenters.
- AD8452 System Demo User Guide (UG-1181), *AD8452 Battery Testing and Formation Evaluation Board*. This user guide features plug and play complete on one channel and a working system, including PC control.

OUTLINE DIMENSIONS

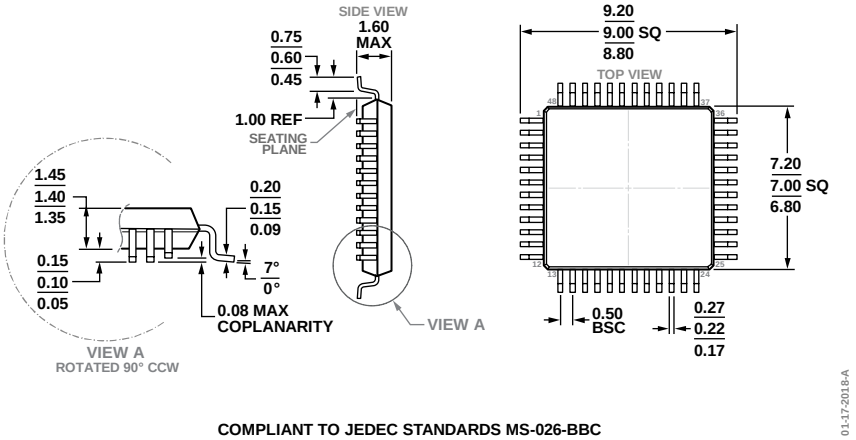

COMPLIANT TO JEDEC STANDARDS MS-026-BBC

Figure 53. 48-Lead Low Profile Quad Flat Package [LQFP]
(ST-48)
Dimensions shown in millimeters

ORDERING GUIDE

Model[1]	Temperature Range	Package Description	Package Option
AD8452ASTZ	−40°C to +85°C	48-Lead Low Profile Quad Flat Package [LQFP]	ST-48
AD8452ASTZ-RL	−40°C to +85°C	48-Lead Low Profile Quad Flat Package [LQFP]	ST-48
AD8452-EVALZ		Evaluation Board	

[1] Z = RoHS Compliant Part.

©2017–2018 Analog Devices, Inc. All rights reserved. Trademarks and registered trademarks are the property of their respective owners.
D16187-0-10/18(A)