10-Bit, 6-Channel Decimating LCD DecDriver® with Level Shifters

AD8384

PRODUCT FEATURES

High accuracy, high resolution voltage outputs
- **10-bit input resolution**
- **Laser trimmed outputs**

Fast settling, high voltage drive
- **30 ns settling time to 0.25% into a 150 pF load**
- **Slew rate 460 V/µs**

Outputs to within 1.3 V of supply rails
High update rates
Fast, 100 Ms/s 10-bit input data update rate
Voltage controlled video reference (brightness), offset, and full-scale (contrast) output levels
Flexible logic
STSQ/XFR allow parallel AD8384 operation
INV bit reverses polarity of video signal
Output short-circuit protection
3.3 V logic, 9 V to 18 V analog supplies
18 V level shifters for panel timing signals
Available in 80-lead 12 mm × 12 mm TQFP E-pad

APPLICATIONS

LCD analog column drivers

FUNCTIONAL BLOCK DIAGRAM

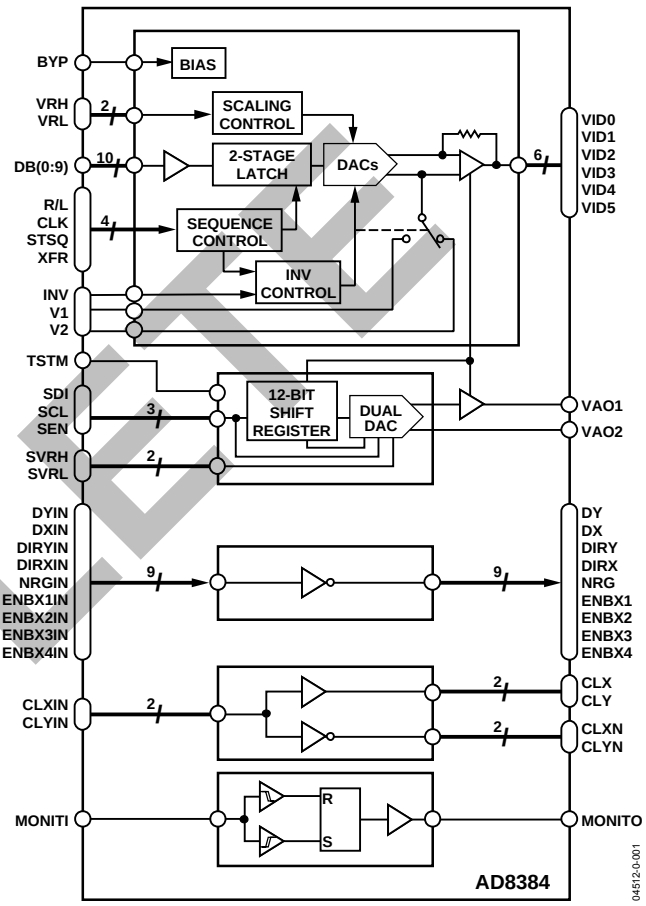

Figure 1.

OBSOLETE

PRODUCT DESCRIPTION

The AD8384 DecDriver provides a fast, 10-bit, latched, decimating digital input that drives six high voltage outputs. 10-bit input words are loaded sequentially into six separate high speed, bipolar DACs. Flexible digital input format allows several AD8384s to be used in parallel in high resolution displays. The output signal can be adjusted for dc reference, signal inversion, and contrast for maximum flexibility. Integrated level shifters convert timing signals from a 3 V timing controller to high voltage for LCD panel timing inputs. Two serial input, 8-bit DACs are integrated to provide dc reference signals. DAC addresses and 8-bit data are loaded in one 12-bit serial word.

The AD8384 is fabricated on the 26 V, fast, bipolar XFHV process developed by Analog Devices, Inc. This process provides fast input logic, bipolar DACs with trimmed accuracy and fast settling, high voltage, precision drive amplifiers on the same chip.

The AD8384 dissipates 1.1 W nominal static power.

The AD8384 is offered in an 80-lead 12 mm × 12 mm TQFP E-pad package and operates over the 0°C to 85°C commercial temperature range.

Rev. 0
Information furnished by Analog Devices is believed to be accurate and reliable. However, no responsibility is assumed by Analog Devices for its use, nor for any infringements of patents or other rights of third parties that may result from its use. Specifications subject to change without notice. No license is granted by implication or otherwise under any patent or patent rights of Analog Devices. Trademarks and registered trademarks are the property of their respective owners.

One Technology Way, P.O. Box 9106, Norwood, MA 02062-9106, U.S.A.
Tel: 781.329.4700 **www.analog.com**
Fax: 781.326.8703 **© 2004 Analog Devices, Inc. All rights reserved.**

TABLE OF CONTENTS

Specifications ... 3
DecDriver ... 3
Level Shifters ... 5
Level Shifting Edge Detector ... 5
Serial Interface ... 6
Power Supplies ... 7
Operating Temperature ... 7
Absolute Maximum Ratings ... 8
Maximum Power Dissipation ... 8
Operating Temperature Range ... 8
Overload Protection ... 8
Exposed Paddle ... 8
Pin Configuration and Function Descriptions ... 9
Timing Characteristics ... 11
DecDriver Section ... 11
Level Shifter Section ... 12
Level Shifting Edge Detector ... 13
Serial Interface ... 14
Functional Description ... 15
Accuracy ... 16
TSTM Control—Test Mode ... 16
Grounded Output Mode ... 16
Overload Protection ... 16
3-Wire Serial Interface ... 16
Serial DACs ... 16
Level Shifters ... 16
Applications ... 17
Power Supply Sequencing ... 17
VBIAS Generation—V1, V2 Input Pin Functionality ... 18
Applications Circuit ... 18
PCB Design for Optimized Thermal Performance ... 19
Thermal Pad Design ... 19
Thermal Via Structure Design ... 19
AD8384 PCB Design Recommendations ... 20
Outline Dimensions ... 21
Ordering Guide ... 21

REVISION HISTORY

Revision 0: Initial Version

OBSOLETE

SPECIFICATIONS

DecDriver

Table 1. @ 25°C, AVCC = 15.5 V, DVCC = 3.3 V, $T_{A\ MIN}$ = 0°C, $T_{A\ MAX}$ = 85°C, VRH = 9.5 V, VRL = V1 = V2 = 7 V, unless otherwise noted

Parameter	Conditions	Min	Typ	Max	Unit
VIDEO DC PERFORMANCE[1]	$T_{A\ MIN}$ to $T_{A\ MAX}$				
VDE	DAC Code 450 to 800	−7.5		+7.5	mV
VCME	DAC Code 450 to 800	−3.5		+3.5	mV
VIDEO OUTPUT DYNAMIC PERFORMANCE	$T_{A\ MIN}$ to $T_{A\ MAX}$, V_O = 5 V Step, C_L = 150 pF				
Data Switching Slew Rate	20% to 80%		460		V/µs
Invert Switching Slew Rate	20% to 80%		560		V/µs
Data Switching Settling Time to 1%			19	24	ns
Data Switching Settling Time to 0.25%			30	50	ns
Invert Switching Settling Time to 1%	V_O = 10 V Step		75	120	ns
Invert Switching Settling Time to 0.25%	V_O = 10 V Step		250	500	ns
Invert Switching Overshoot	V_O = 10 V Step		100	200	mV
CLK and Data Feedthrough[2]			10		mV p-p
All-Hostile Crosstalk[3]					
Amplitude			10		mV p-p
Glitch Duration			30		ns
DAC Transition Glitch Energy	DAC Code 511 to 512		0.3		nV-s
VIDEO OUTPUT CHARACTERISTICS					
Output Voltage Swing	AVCC – VOH, VOL – AGND		1.1	1.3	V
Output Voltage—Grounded Mode			0.25		V
Data Switching Delay: t_9[4]	50 % of VIDx	10	12	14	ns
INV Switching Delay: t_{10}[5]	50 % of VIDx	13	15	17	ns
Output Current			100		mA
Output Resistance			22		Ω
REFERENCE INPUTS					
V1 Range	V2 ≥ (V1-0.25V)	5.25		AVCC – 4	V
V2 Range	V2 ≥ (V1-0.25V)	5.25		AVCC – 4	V
V1 Input Current			−3		µA
V2 Input Current			−14		µA
VRL Range	VRH ≥ VRL	V1 – 0.5		AVCC – 1.3	V
VRH Range	VRH ≥ VRL	VRL		AVCC	V
(VRH–VRL) Range	VFS = 2(VRH – VRL)	0		2.75	V
VRH Input Resistance	To VRL		20		kΩ
VRL Bias Current			−0.2		µA
VRH Input Current			125		µA
RESOLUTION					
Coding	Binary	10			Bits

OBSOLETE

[1] VDE = differential error voltage; VCME = common-mode error voltage; VFS = full-scale output voltage = 2 × (VRH – VRL). See the Accuracy section.
[2] Measured differentially on two outputs as CLK and DB(0:9) are driven and STSQ and XFR are held LOW.
[3] Measured differentially on two outputs as the other four are transitioning by 5 V. Measured for both states of INV.
[4] Measured from 50% of rising CLK edge to 50% of output change. Measurement is made for both states of INV.
[5] Measured from 50% of rising CLK edge to 50% of output change. Refer to Figure 7 for the definition.

DecDriver (continued)

Parameter	Conditions	Min	Typ	Max	Unit
DIGITAL INPUT CHARACTERISTICS					
Max. Input Data Update Rate		100			Ms/s
CLK to Data Setup Time: t_1		0			ns
CLK to STSQ Setup Time: t_3		0			ns
CLK to XFR Setup Time: t_5		0			ns
CLK to Data Hold Time: t_2		3			ns
CLK to STSQ Hold Time: t_4		3			ns
CLK to XFR Hold Time: t_6		3			ns
CLK High Time: t_7		3			ns
CLK Low Time: t_8		2.5			ns
C_{IN}				3	pF
I_{IH}			0.05		µA
I_{IL}			–0.6		µA
V_{IH}		2			V
V_{IL}				0.8	V
V_{TH}			1.65		V

OBSOLETE

LEVEL SHIFTERS

Table 2. @ 25°C, AVCC = 15.5 V, DVCC = 3.3 V, $T_{A\,MIN}$ = 0°C, $T_{A\,MAX}$ = 85°C, VRH = 9.5 V, VRL = V1 = V2 = 7 V, unless otherwise noted

Parameter	Conditions	Min	Typ	Max	Unit
LEVEL SHIFTER LOGIC INPUTS					
C_{IN}				3	pF
I_{IH}			0.05		µA
I_{IL}			–0.6		µA
V_{TH}			1.65		V
V_{IH}		2.0		DVCC	V
V_{IL}		DGND		0.8	V
LEVEL SHIFTER OUTPUTS	$R_L \geq 10$ kΩ				
V_{OH}		AVCC – 0.45	AVCC – 0.25		V
V_{OL}			0.25	0.45	V
LEVEL SHIFTER DYNAMIC PERFORMANCE	$T_{A\,MIN}$ to $T_{A\,MAX}$				
Output Rise, Fall Times—t_r, t_f					
DX, CLX, CLXN, ENBX(1–4)	C_L = 40 pF		18.5	30	ns
DY, CLY, CLYN	C_L = 40 pF		40	70	ns
DIRX, DIRY	C_L = 40 pF		100	150	ns
NRG	C_L = 200 pF		35	50	ns
	C_L = 300 pF		55	100	ns
Propagation Delay Times—t_{11}, t_{12}, t_{13}, t_{14}					
DX, CLX, CLXN, ENBX(1–4)	C_L = 40 pF		20	50	ns
DY, CLY, CLYN	C_L = 40 pF		29	50	ns
DIRX, DIRY	C_L = 40 pF		60	100	ns
NRG	C_L = 200 pF		25	55	ns
	C_L = 300 pF		32		ns
Output Skew					
ENBX(1–4)—t_{15}, t_{16}	C_L = 40 pF			2	ns
DX to ENBX(1–4)—t_{16}	C_L = 40 pF			2	ns
DX to CLX—t_{15}, t_{16}, t_{17}, t_{18}	C_L = 40 pF			10	ns
DY to CLY, CLYN—t_{15}, t_{16}, t_{17}, t_{18}	C_L = 40 pF			20	ns

LEVEL SHIFTING EDGE DETECTOR

Table 3. C_L = 10 pF, $T_{A\,MIN}$ to $T_{A\,MAX}$, unless otherwise noted

Parameter		Min	Typ	Max	Unit
V_{IL}	Input Low Voltage	AGND		AGND + 2.75	V
V_{IH}	Input High Voltage	AVCC – 2.7		AVCC	V
V_{TH} LH	Input Rising Edge Threshold Voltage		AGND + 3		V
V_{TH} HL	Input Falling Edge Threshold Voltage		AVCC – 3		V
V_{OH}	Output High Voltage	DVCC – 0.45	DVCC – 0.25		V
V_{OL}	Output Low Voltage		0.25	0.45	V
I_{IH}	Input Current High State		1.2	2.5	µA
I_{IL}	Input Current Low State	–2.5	–1.2		µA
t_{19}	Input Rising Edge Propagation Delay Time		16		ns
Δt_{19}	t_{19} Variation with Temperature		2		ns
t_{20}	Input Falling Edge Propagation Delay Time		12		ns
Δt_{20}	t_{20} Variation with Temperature		2		ns
t_r	Output Rise Time		5		ns
t_f	Output Fall Time		6		ns

OBSOLETE

SERIAL INTERFACE

Table 4. @ 25°C, AVCC = 15.5 V, DVCC = 3.3 V, $T_{A\,MIN}$ = 0°C, $T_{A\,MAX}$ = 85°C, SVRL = 4 V, SVRH = 9 V, unless otherwise noted

Parameter	Conditions	Min	Typ	Max	Unit
SERIAL DAC REFERENCE INPUTS	SVFS = (SVRH – SVRL)				
SVRH Range	SVRL < SVRH	SVRL + 1		AVCC – 3.5	V
SVRL Range	SVRL < SVRH	AGND + 1.5		SVRH – 1	V
SVFS Range		1		8	V
SVRH Input Current	SVFS = 5 V		–70		nA
SVRL Input Current	SVFS = 5 V	–2.8	–2.5		mA
SVRH Input Resistance			40		kΩ
SERIAL DAC ACCURACY					
DNL	SVFS = 5 V, $R_L = \infty$	–1.0		+1.0	LSB
INL	SVFS=5 V, $R_L = \infty$	–1.5		+1.5	LSB
Output Offset Error		–2.0		+2.0	LSB
Scale Factor Error		–4.0		+4.0	LSB
SERIAL DAC LOGIC INPUTS					
C_{IN}				3	pF
I_{IL}			–0.6		µA
I_{IH}			0.05		µA
V_{TH}			1.65		V
V_{IH}		2.0		DVCC	V
V_{IL}		DGND		0.8	V
SERIAL DAC OUTPUTS					
Maximum Output Voltage			SVRH – 1 LSB		V
Minimum Output Voltage			SVRL		V
VAO1—Grounded Mode			0.1		V
I_{OUT}			±30		mA
C_{LOAD} Low Range[6]				0.002	µF
C_{LOAD} High Range[1]		0.047			µF
SERIAL DAC DYNAMIC PERFORMANCE					
SEN to SCL Setup Time, t_{20}		10			ns
SCL, High Level Pulse Width, t_{21}		15			ns
SCL, Low Level Pulse Width, t_{22}		10			ns
SDI Setup Time, t_{24}		10			ns
SDI Hold Time, t_{25}		10			ns
SCL to SEN Hold Time, t_{23}		15			ns
VAO1, VAO2 Settling Time, t_{26}	SVFS = 5 V, to 0.5%, C_L = 100 pF		1	2	µs
VAO1, VAO2 Settling Time, t_{26}	SVFS = 5 V, to 0.5%, C_L = 33 µF		10	15	ms

[6] Outputs VAO1 and VAO2 are designed to drive very high capacitive loads. The load capacitance must be ≤ 0.002 µF or ≥0.047 µF. Load capacitance in the range 0.002 µF to 0.047 µF causes the output overshoot to exceed 100 mV.

OBSOLETE

POWER SUPPLIES

Table 5. @ 25°C, AVCC = 15.5 V, DVCC = 3.3 V, $T_{A\ MIN}$ = 0°C, $T_{A\ MAX}$ = 85°C, SVRL = 4 V, SVRH = 9 V, unless otherwise noted

Parameter	Min	Typ	Max	Unit
DVCC, Operating Range	3	3.3	3.6	V
DVCC, Quiescent Current		40	50	mA
AVCC Operating Range	9		18	V
Total AVCC Quiescent Current		70	85	mA

OPERATING TEMPERATURE

Parameter	Conditions	Min	Typ	Max	Unit
Ambient Temperature Range, T_A[7]	Still Air	0		75	°C
Ambient Temperature Range, T_A[8]	200 lfm	0		85	°C
Junction Temperature Range, T_J	100% Tested	25		125	°C

[7] Operation at high ambient temperature requires a thermally optimized PCB layout (see the Applications section), input data update rate not exceeding 85 MHz, black-to-white transition ≤ 4V and C_L ≤ 150 pF. In systems with limited or no airflow, the maximum ambient operating temperature is limited to 75°C. For operation above 75°C, see Note 8 below.

[8] In addition to the requirements stated in Note 7 above, operation at 85°C ambient temperature requires 200 lfm airflow.

OBSOLETE

ABSOLUTE MAXIMUM RATINGS

Table 6. AD8384 Stress Ratings[9]

Parameter	Rating
Supply Voltages	
AVCCx – AGNDx	18 V
DVCC – DGND	4.5 V
Input Voltages	
Maximum Digital Input Voltage	DVCC + 0.5 V
Minimum Digital Input Voltage	DGND – 0.5 V
Maximum Analog Input Voltage	AVCC + 0.5 V
Minimum Analog Input Voltages	AGND – 0.5 V
Internal Power Dissipation[10]	
TQFP E-Pad Package @ T_A = 25°C	4.16 W
Operating Temperature Range	0°C to 85°C
Storage Temperature Range	–65°C to +125°C
Lead Temperature Range (Soldering 10 sec)	300°C

[9] Stresses above those listed under the Absolute Maximum Ratings may cause permanent damage to the device. This is a stress rating only; functional operation of the device at these or any other conditions above those indicated in the operational section of this specification is not implied. Exposure to the absolute maximum ratings for extended periods may reduce device reliability.

[10] 80-lead TQFP E-pad package:
θ_{JA} = 24°C/W (JEDEC STD, 4-layer PCB in still air)
θ_{JC} = 16°C/W

OVERLOAD PROTECTION

The AD8384 employs a 2-stage overload protection circuit that consists of an output current limiter and a thermal shutdown. The maximum current at any one output of the AD8384 is, on average, internally limited to 100 mA. In the event of a momentary short circuit between a video output and a power supply rail (VCC or AGND), the output current limit is sufficiently low to provide temporary protection.

The thermal shutdown debiases the output amplifier when the junction temperature reaches the internally set trip point. In the event of an extended short-circuit between a video output and a power supply rail, the output amplifier current continues to switch between 0 mA and 100 mA typical with a period determined by the thermal time constant and the hysteresis of the thermal trip point. Thermal shutdown provides long term protection by limiting average junction temperature to a safe level.

EXPOSED PADDLE

To ensure optimized thermal performance, the exposed paddle must be thermally connected to an external plane, such as AVCC or GND, as described in the Application Notes.

MAXIMUM POWER DISSIPATION

The maximum power that can be safely dissipated by the AD8384 is limited by its junction temperature. The maximum safe junction temperature for plastic encapsulated devices, as determined by the glass transition temperature of the plastic, is approximately 150°C. Exceeding this limit temporarily may cause a shift in the parametric performance due to a change in the stresses exerted on the die by the package. Exceeding a junction temperature of 175°C for an extended period can result in device failure.

OPERATING TEMPERATURE RANGE

Although the maximum safe operating junction temperature is higher, the AD8384 is 100% tested at a junction temperature of 125°C. Consequently, the maximum guaranteed operating junction temperature is 125°C.

To ensure operation within the specified temperature range, it is necessary to limit the maximum power dissipation as follows:

$$P_{DMAX} \approx \frac{(T_{JMAX} - T_A)}{\theta_{JA} - 0.5 \times \sqrt{Airflow(lfm)}}$$

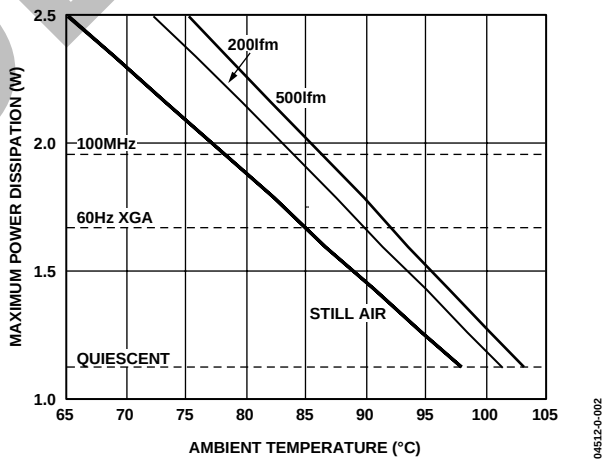

*Figure 2. Maximum Power Dissipation vs. Temperature**

*AD8384 on a 4-layer JEDEC PCB with thermally optimized landing pattern, as described in the Application Notes.

Note: When operating under the conditions specified in this data sheet, the AD8384's quiescent power dissipation is 1.1 W. When driving a 6-channel XGA panel with a 150 pF input capacitance, the AD8384 dissipates a total of 1.58 W when displaying 1-pixel-wide alternating white and black vertical lines generated by a standard 60 Hz XGA input video. When the pixel clock frequency is raised to 100 MHz (the AD8384's maximum specified operating frequency), total power dissipation increases to 1.83 W. Figure 2 shows these specific power dissipations.

OBSOLETE

PIN CONFIGURATION AND FUNCTION DESCRIPTIONS

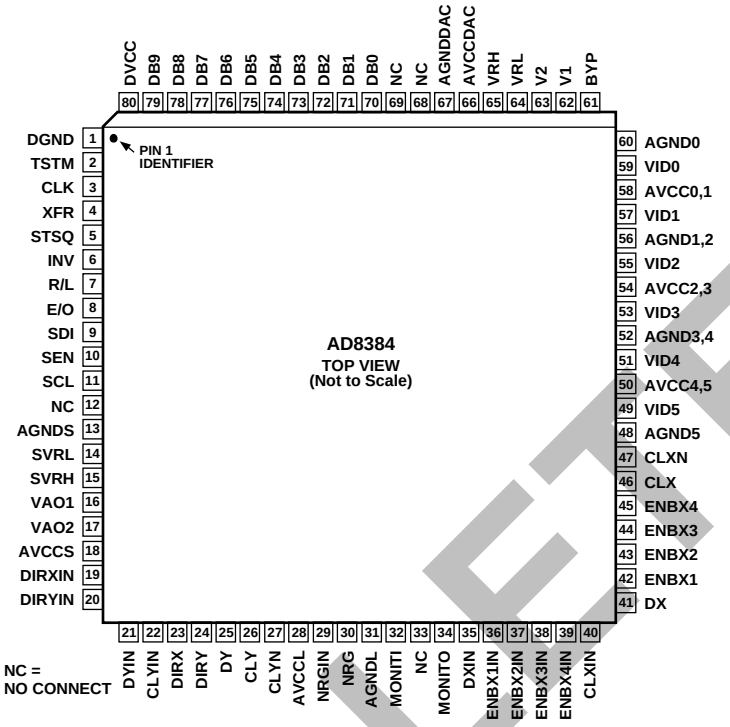

Figure 3. 80-Lead 12 mm × 12 mm TQFP E-Pad Pin Configuration

Table 7. Pin Function Descriptions

Pin Name	Function	Description
DB(0:9)	Data Input	10-Bit Data Input. MSB = DB(9).
CLK	Clock	Clock Input.
STSQ	Start Sequence	The state of STSQ is detected on the active edge of CLK. A new data loading sequence begins on the next active edge of CLK after STSQ is detected HIGH. The active CLK edge is the rising edge when E/O is held HIGH. It is the falling edge when E/O is held LOW.
R/L	Right/Left Select	A new data loading sequence begins on the left, with Channel 0, when this input is LOW, and on the right, with Channel 5, when this input is HIGH.
E/O	Even/Odd Select	The active CLK edge is the rising edge when this input is held HIGH. It is the falling edge when this input is held LOW. Data is loaded sequentially on the rising edges of CLK when this input is HIGH and on the falling edges when this input is LOW.
XFR	Data Transfer	XFR is detected and a data transfer is initiated on a rising CLK edge when this input is held HIGH. Data is transferred to the video outputs on the next rising CLK edge after XFR is detected.
VID0–VID5	Analog Outputs	These pins are directly connected to the analog inputs of the LCD panel.
V1, V2	Reference Voltages	The voltage applied between V1 and AGND sets the white video level during INV = LOW. The voltage applied between V2 and AGND sets the white video level during INV = HIGH.
VRH, VRL	Full-Scale References	Twice the voltage applied between these pins sets the full-scale video output voltage.
BYP	Bypass	A 0.1µ F capacitor connected between this pin and AGND ensures optimum settling time.

OBSOLETE

Pin Name	Function	Description
INV	Invert	When this input is HIGH, the VIDx output voltages are above V2. When INV is LOW, the VIDx output voltages are below V1. The state of INV is latched on the first rising CLK edge, after XFR is detected. The VIDx outputs change on the rising CLK edge after the next XFR is detected.
DVCC	Digital Power Supply	Digital Power Supply.
DGND	Digital Ground	This pin is normally connected to the digital ground plane.
AVCCx	Analog Power Supplies	Analog Power Supplies.
AGNDx	Analog Ground	Analog Supply Returns.
SVRH, SVRL	Serial DAC Reference Voltages	Reference Voltages for the Output Amplifiers of the Control DACs.
SCL	Serial Data Clock	Serial Data Clock.
SDI	Data Input	While the SEN input is LOW, one 12-bit serial word is loaded into the serial DAC on the rising edges of SCL. The first bit selects the output, the next three bits are unused, and the subsequent eight bits are the data used in the DAC.
SEN	Serial DAC Enable	A falling edge of this input initiates a loading cycle. While this input is held LOW, the serial DAC is enabled and data is loaded on every rising edge of SCL. The selected output is updated on the rising edge of this input. While this input is held HIGH, the control DAC is disabled.
VAO1, VAO2	Serial DAC Voltage Output	These output voltages are updated on the rising edge of the SEN input.
TSTM	Test Mode	When this input is LOW, the output mode is determined by the function programmed into the serial interface. While this input is held HIGH, the output mode is forced to NORMAL, regardless of function programmed into the serial interface.
MONITI	Monitor Input	Logic Input of the Level Shifting Inverting Edge Detector.
MONITO	Monitor Output	Output of the Level Shifting Inverting Edge Detector.
DYIN, DIRYIN, DIRXIN, DXIN, NRGIN, ENBX(1–4)IN	Inverting Level Shifter Inputs	Logic Input of the Inverting Level Shifters.
DX, DY, DIRX, DIRY, NRG, ENBX(1-4)	Inverting Level Shifter Outputs	While the corresponding input voltage of these level shifters is below the threshold voltage, the output voltage at these pins is at VOH. While the corresponding input voltage of these level shifters is above the threshold voltage, the output voltage at these pins is at VOL.
CLXIN, CLYIN	Complementary Level Shifter Inputs	Logic Input of the Complementary Level Shifters.
CLX, CLXN, CLY, CLYN,	Complementary Level Shifter Outputs	While the corresponding input voltage of these level shifters is below the threshold voltage, the voltage at the noninverting output pins is at VOH and the voltage at the inverting outputs is at VOL. While the corresponding input voltage of these level shifters is above the threshold voltage, the voltage at the noninverting output pins is at VOL and the voltage at the inverting outputs is at VOH.

OBSOLETE

TIMING CHARACTERISTICS

DECDRIVER SECTION

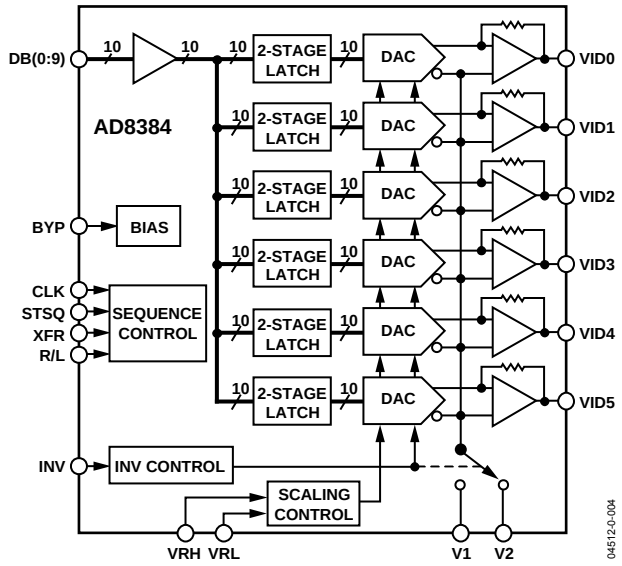

Figure 4. Block Diagram

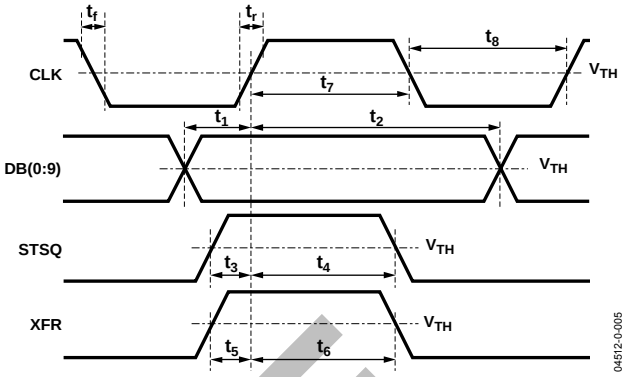

Figure 5. Input Timing, Even Mode (E/O = HIGH)

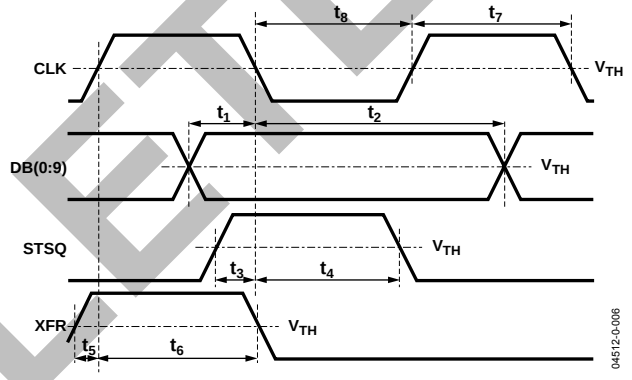

Figure 6. Input Timing, Odd Mode (E/O = LOW)

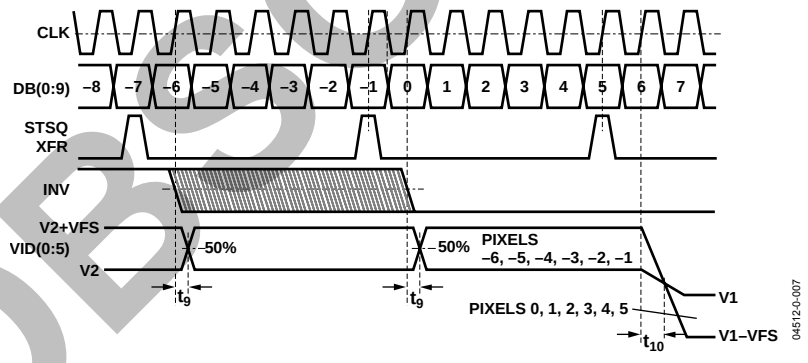

Figure 7. Output Timing (R/L = Low, E/O = High)

OBSOLETE

Table 8. Timing Characteristics

Parameter		Conditions	Min	Typ	Max	Unit
t_1	CLK to Data Setup Time		0			ns
t_2	CLK to Data Hold Time		3			ns
t_3	CLK to STSQ Setup Time		0			ns
t_4	CLK to STSQ Hold Time		3			ns
t_5	CLK to XFR Setup Time		0			ns
t_6	CLK to XFR Hold Time		3			ns
t_7	CLK High Time		3			ns
t_8	CLK Low Time		2.5			ns
t_9	CLK to VIDx Delay		10	12	14	ns
t_{10}	INV to VIDx Delay		13	15	17	ns

LEVEL SHIFTER SECTION

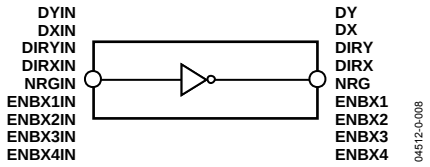

Figure 8. Level Shifter—Inverting

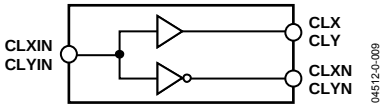

Figure 9. Level Shifter—Complementary

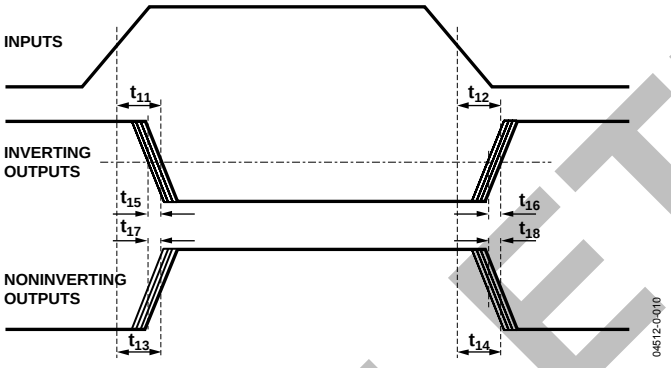

Figure 10. Inverting and Complementary Level Shifter Timing

Table 9. Level Shifter Timing

Parameter	Conditions	Min	Typ	Max	Unit
Output Rise, Fall Times, t_r, t_f	$T_{A\,MIN}$ to $T_{A\,MAX}$				
DX, CLX, CLXN, ENBX(1–4)	C_L = 40 pF		18.5	30	ns
DY, CLY, CLYN			40	70	ns
DIRX, DIRY			100	150	ns
NRG	C_L = 200 pF		35	50	ns
	C_L = 300 pF		55	100	ns
Propagation Delay Times—t_{11}, t_{12}, t_{13}, t_{14}	$T_{A\,MIN}$ to $T_{A\,MAX}$				
DX, CLX, CLXN, ENBX(1–4)	C_L = 40 pF		20	50	ns
DY, CLY, CLYN			29	50	ns
DIRX, DIRY			60	100	ns
NRG	C_L = 200 pF		25	55	ns
	C_L = 300 pF		32		ns
Propagation Delay Skew	$T_{A\,MIN}$ to $T_{A\,MAX}$, C_L = 40 pF				
ENBX(1–4)—t_{15}, t_{16}				2	ns
DX to ENBX(1–4)—t_{16}				2	ns
DX to CLX—t_{15}, t_{16}, t_{17}, t_{18}				10	ns
DY to CLY, CLYN—t_{15}, t_{16}, t_{17}, t_{18}				20	ns

OBSOLETE

LEVEL SHIFTING EDGE DETECTOR

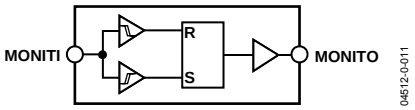

Figure 11. Level Shifting Edge Detector Block Diagram

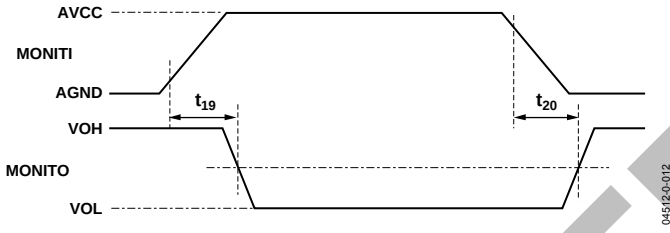

Figure 12. Level Shifting Edge Detector Timing

Table 10. Level Shifting Edge Detector, AVCC = 15.5 V, DVCC = 3.3 V, C_L = 10 pF, $T_{A\ MIN}$ = 25°C, $T_{A\ MAX}$ = 85°C

Parameter		Min	Typ	Max	Unit
V_{IL}	Input Low Voltage	AGND		AGND + 2.75	V
V_{IH}	Input High Voltage	AVCC – 2.7		AVCC	V
V_{TH} LH	Input Rising Edge Threshold Voltage		AGND + 3		V
V_{TH} HL	Input Falling Edge Threshold Voltage		AVCC – 3		V
I_{IH}	Input Current High State		1.2	2.5	µA
I_{IL}	Input Current Low State	–2.5	–1.2		µA
V_{OH}	Output High Voltage	DVCC – 0.45	DVCC – 0.25		V
V_{OL}	Output Low Voltage		0.25	0.45	V
t_{19}	Input Rising Edge Propagation Delay Time		16		ns
Δt_{19}	t_{19} Variation with Temperature		2		ns
t_{20}	Input Falling Edge Propagation Delay Time		12		ns
Δt_{20}	t_{20} Variation with Temperature		2		ns
t_r	Output Rise Time		5		ns
t_f	Output Fall Time		6		ns

OBSOLETE

SERIAL INTERFACE

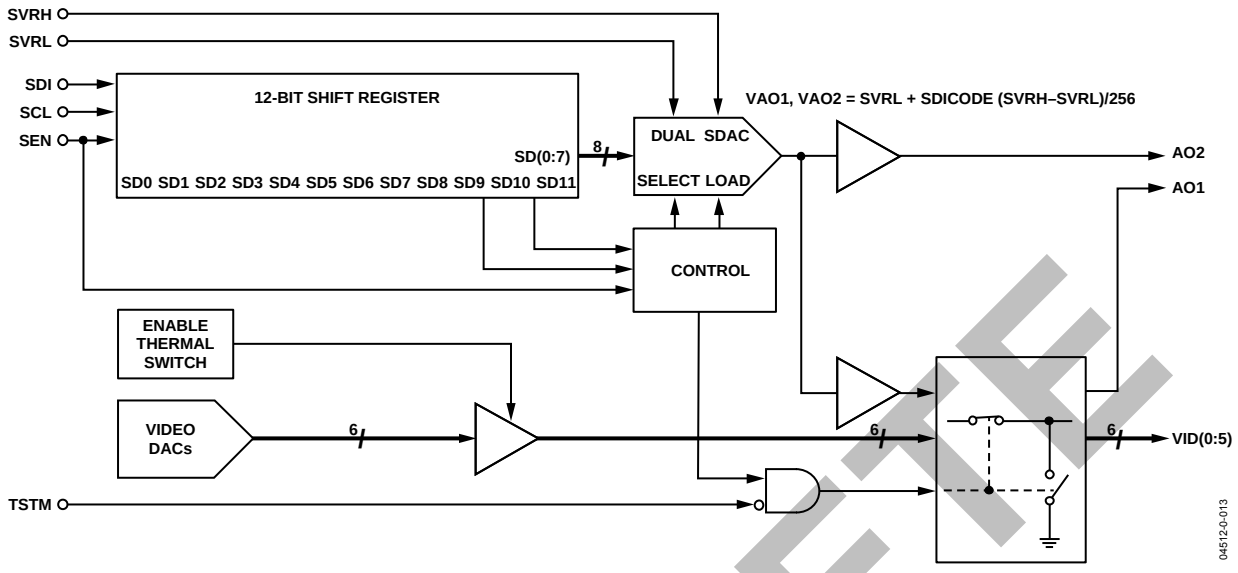

Figure 13. Serial Interface Block Diagram

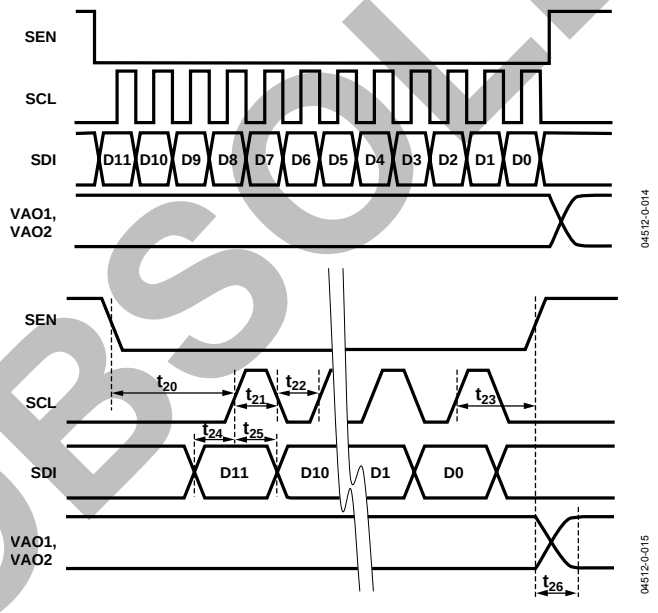

Figure 14. Serial DAC Timing

Table 11. Serial DAC Timing

Parameter	Conditions	Min	Typ	Max	Unit
SEN to SCL Setup Time, t_{20}		10			ns
SCL, High Level Pulse Width, t_{21}		15			ns
SCL, Low Level Pulse Width, t_{22}		10			ns
SDI Setup Time, t_{24}		10			ns
SDI Hold Time, t_{25}		10			ns
SCL to SEN Hold Time, t_{23}		15			ns
VAO1, VAO2 Settling Time, t_{26}	VFS = 5 V, to 0.5%, C_L = 100 pF		1	2	µs
	VFS = 5 V, to 0.5%, C_L = 33 µF		10	15	ms

OBSOLETE

FUNCTIONAL DESCRIPTION

The AD8384 is a system building block designed to directly drive the columns of LCD microdisplays of the type popularized for use in projection systems. It comprises six channels of precision, 10-bit digital-to-analog converters loaded from a single, high speed, 10-bit wide input. Precision current feedback amplifiers, providing well-damped pulse response and fast voltage settling into large capacitive loads, buffer the six outputs. Laser trimming at the wafer level ensures low absolute output errors and tight channel-to-channel matching. Tight part-to-part matching in high resolution systems is guaranteed by the use of external voltage references.

Three groups of level shifters convert digital inputs to high voltage outputs for direct connection to the control inputs of LCD panels.

An edge detector conditions a high voltage reference timing input from the LCD and converts it to digital levels for use in a synchronizing timing controller such as the AD8389.

Start Sequence Control—Input Data Loading

A valid STSQ control input initiates a new 6-clock loading cycle during which six input data-words are loaded sequentially into six internal channels. A new loading sequence begins on the current active CLK edge only when STSQ was held HIGH at the preceding active CLK edge.

Right/Left Control—Input Data Loading

To facilitate image mirroring, the direction of the loading sequence is set by the R/L control.

A new loading sequence begins at Channel 0 and proceeds to Channel 5 when the R/L control is held LOW. It begins at Channel 5 and proceeds to Channel 0 when the R/L control is held HIGH.

Even/Odd Control—Input Data Loading

Data is loaded on the rising CLK edges when this input is HIGH, and on the falling CLK edges when this input is LOW.

XFR Control—Data Transfer to Outputs

Data transfer to the outputs is initiated by the XFR control. Data is transferred to all outputs simultaneously on the rising CLK edge only when XFR was HIGH during the preceding rising CLK edge.

V1, V2 Inputs—Voltage Reference Inputs

Two external analog voltage references set the levels of the outputs. V1 sets the output voltage at Code 1023 while the INV input is LOW; V2 sets the output voltage at Code 1023 while INV is held HIGH.

VRH, VRL Inputs—Full-Scale Video Reference Inputs

Twice the difference between these analog input voltages sets the full-scale output voltage VFS = 2 × (VRH – VRL).

INV Control—Analog Output Inversion

The analog voltage equivalent of the input code is subtracted from (V2 + VFS) while INV is held HIGH and added to (V1 –VFS) while INV is held LOW. Video inversion is delayed by six to 12 CLK cycles from the INV input.

Transfer Function and Analog Output Voltage

The DecDriver has two regions of operation where the video output voltages are either above reference voltage *V2* or below reference voltage *V1*. The transfer function defines the video output voltage as a function of the digital input code:

$$VIDx(n) = V2 + VFS \times (1 - [n/1023]), \text{ for INV = HIGH}$$

$$VIDx(n) = V1 - VFS \times (1 - [n/1023]), \text{ for INV = LOW}$$

where: n = input code

$$VFS = 2 \times (VRH - VRL)$$

A number of internal limits define the usable range of the video output voltages, VIDx. See Figure 15.

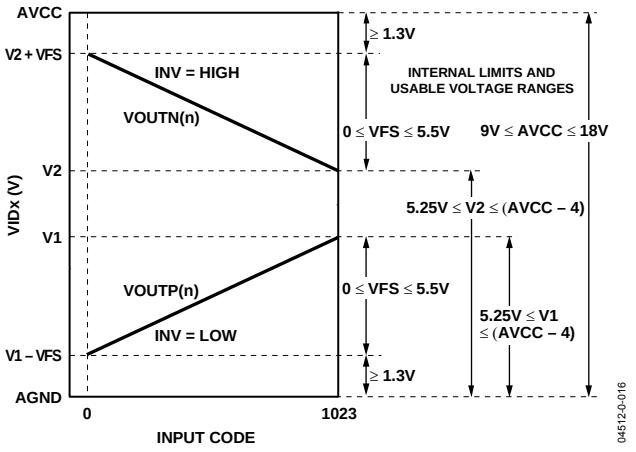

Figure 15. Transfer Function and Usable Voltage Ranges

OBSOLETE

ACCURACY

To best correlate transfer function errors to image artifacts, the overall accuracy of the DecDriver is defined by two parameters: VDE and VCME.

VDE, the differential error voltage, measures the difference between the rms value of the output and the rms value of the ideal. The defining expression is

$$VDE(n) = \frac{[VOUTN(n) - V2] - [VOUTP(n) - V1]}{2} - \left(1 - \frac{n}{1023}\right) \times VFS$$

VCME, the common-mode error voltage, measures ½ the dc bias of the output. The defining expression is

$$VCME(n) = \frac{1}{2}\left[\frac{VOUTN(n) + VOUTP(n)}{2} - \frac{(V2 + V1)}{2}\right]$$

TSTM CONTROL—TEST MODE

A LOW on this input allows serial interface control of the output operating mode. A HIGH on this input forces the video outputs and VAO1 to normal operating mode.

GROUNDED OUTPUT MODE

In normal operating mode, the voltage of the video outputs and VAO1 are determined by the inputs.

In Grounded Output mode, the video outputs and VAO1 are forced to AGND.

OVERLOAD PROTECTION

The overload protection employs current limiters and a thermal switch, protecting the video output pins against accidental shorts between any video output pin and AVCC or AGND.

The junction temperature trip point of the thermal switch is 165°C. Production test guarantees a minimum junction temperature trip point of 125°C. Consequently, the operating junction temperature should not be allowed to rise above 125°C.

For systems that operate at high internal ambient temperatures and require large capacitive loads to be driven by the AD8384 at high frequencies, a minimum airflow of 200 lfm should be maintained to ensure junction temperatures below 125°C.

3-WIRE SERIAL INTERFACE

The serial interface controls two 8-bit serial DACs, the overload protection and the video output operating mode via a 12-bit wide serial word from a microprocessor. Four of the 12-bits select the function and the remaining eight bits are the data for the serial DACs.

Table 12. Bit Definitions

Bit Name	Bit Functionality
SD(0:7)	8-Bit SDAC Data. MSB = SD7.
SD8	Not Used.
SD9	Not Used.
SD10	Output operating mode and SDAC selection control.
SD11	Output operating mode and SDAC selection control.

Table 13. Truth Table

	SD				
SEN	11	10	9	8	Action
↓	0	0	X	X	Load VAO2. No change to VAO1. No change to Grounded mode.
↓	1	0	X	X	Load VAO1. Release outputs from Grounded mode. No change to AO2.
↓	0	1	X	X	Release Video Outputs and VAO1 from Grounded Output mode. No change to VAO1 and VAO2 data.
↓	1	1	X	X	Video Outputs and VAO1 to Grounded Output mode. No change to VAO1 and VAO2 data.
↑	X	X	X	X	No Change.

SERIAL DACS

Both serial DACs are loaded via the serial interface. The output voltage is determined by the following equation:

$$VAO1, VAO2 = SVRL + SD(0{:}7) \times (SVRH - SVRL)/256$$

Output V*AO1* is designed to drive very large capacitive loads above 0.047 µF. Lower capacitive loads may result in excessive overshoot at V*AO1*.

LEVEL SHIFTERS

The characteristics of the level shifters are optimized based on their intended use.

Seven level shifters—DX, CLX, CLXN, and ENBX(1:4)—are optimized for "X direction," and three—DY, CLY, and CLYN—are optimized for the "Y direction" control signals. One level shifter, NRG, is designed to drive a large capacitive load and optimized for an X direction control signal and two, DIRX and DIRY are optimized for very low frequency control signals.

One level shifting edge detector, MONITI, MONITO, is optimized to condition a synchronizing feedback reference signal from the LCD.

OBSOLETE

APPLICATIONS

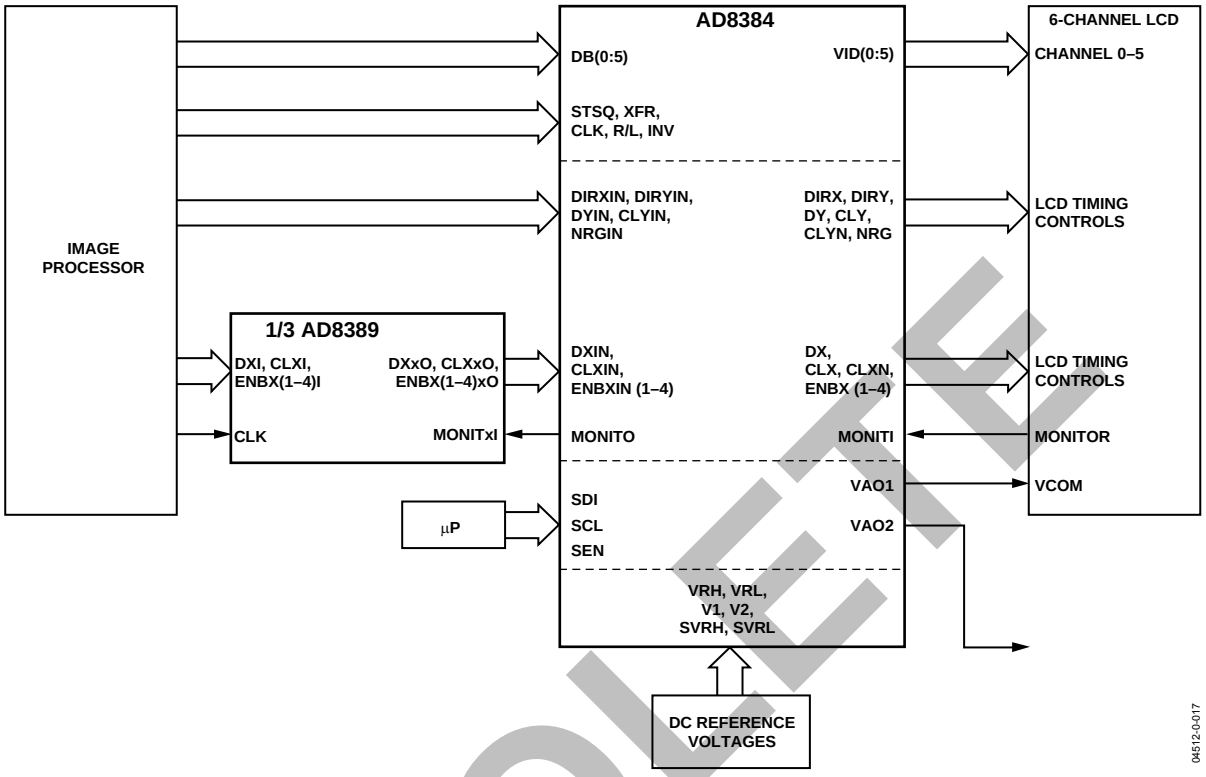

Figure 16. Typical Applications Circuit

OBSOLETE

POWER SUPPLY SEQUENCING

As indicated under the Absolute Maximum Ratings, the voltage at any input pin cannot exceed its supply voltage by more than 0.5 V. To ensure compliance with the Absolute Maximum Ratings, the following power-up and power-down sequencing is recommended.

During power-up, initial application of nonzero voltages to any of the input pins must be delayed until the supply voltage ramps up to at least the highest maximum operational input voltage.

During power-down, the voltage at any input pin must reach zero during a period not exceeding the hold-up time of the power supply.

Power ON

Sequence the applied voltages starting with the highest and proceeding toward the lowest. Apply AVCC and then proceed with applying the voltages in a decreasing order, for example VRH, V2, and so on. Apply DVCC last.

Power OFF

Remove voltages starting with the lowest and proceed toward the highest. Remove DVCC and then proceed with the voltages in an increasing order, for example V1, V2, VRH, and so on. Remove AVCC last.

Failure to comply with the Absolute Maximum Ratings may result in functional failure or damage to the internal ESD diodes. Damaged ESD diodes may cause temporary parametric failures, which may result in image artifacts. Damaged ESD diodes cannot provide full ESD protection, reducing reliability.

To Ensure Grounded Output Mode at Power-Off

If references are active sources:

1. Program Grounded Output mode
2. Turn off references
3. Turn off AVCC
4. Turn off DVCC

If references are passive voltage dividers dependent on AVCC:

1. Program Grounded Output mode
2. Set AVCC to 5 V
3. Hold for 1 ms
4. Turn off DVCC
5. Turn off AVCC

VBIAS GENERATION—V1, V2 INPUT PIN FUNCTIONALITY

In order to avoid image flicker, a symmetrical ac voltage is required and a bias voltage of approximately 1 V minimum must be maintained across the pixels of HTPS LCDs. The AD8384 provides two methods of maintaining this bias voltage.

Internal Bias Voltage Generation

Standard systems that internally generate the bias voltage reserve the upper-most code range for the bias voltage, and use the remaining code range to encode the video for gamma correction. In these systems, a high degree of ac symmetry is guaranteed by the AD8384.

The V1 and V2 inputs in these systems are tied together and are normally connected to VCOM, as shown in Figure 17.

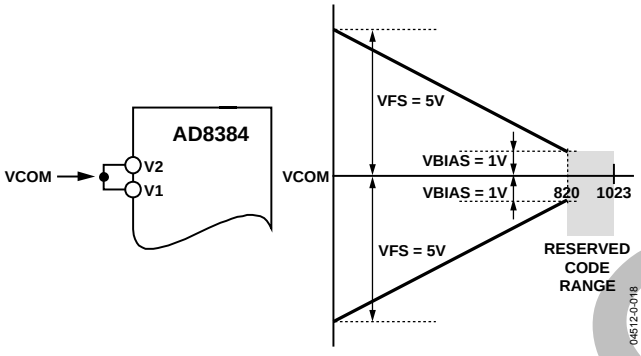

Figure 17. V1, V2 Connection and Transfer Function in a Typical Standard System

External Bias Voltage Generation

In systems that require improved brightness resolution and higher accuracy, the V1 and V2 inputs, connected to external voltage references, provide the necessary bias voltage (VBIAS) while allowing the full code range to be used for gamma correction.

To ensure a symmetrical ac voltage at the outputs of the AD8384, VBIAS must remain constant for both states of INV. Therefore, V1 and V2 are defined as

$$V1 = VCOM - VBIAS$$

$$V2 = VCOM + VBIAS$$

APPLICATIONS CIRCUIT

The circuit in Figure 18 ensures VBIAS symmetry to within 1 mV with a minimum component count. Bypass capacitors are not shown for clarity.

Note from the curve in Figure 20 that the AD8132 (Figure 18) typically produces a symmetrical output at 85°C when its supply, (V+) – (V–), is at 7.2 V.

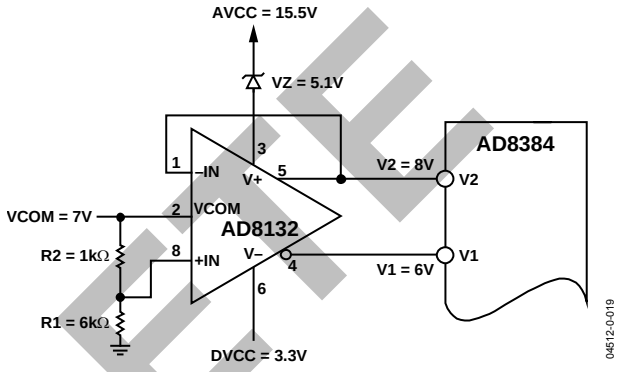

Figure 18. External VBIAS Generator with the AD8132

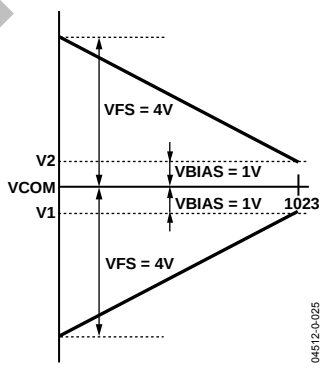

Figure 19. AD8384 Transfer Function in a Typical High Accuracy System

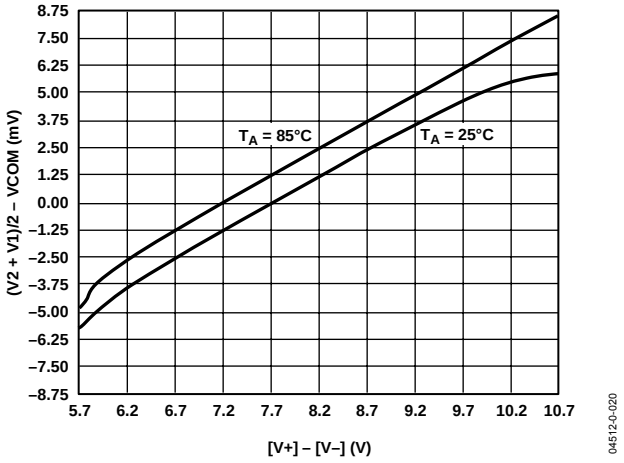

Figure 20. Typical Asymmetry at the Outputs of the AD8132 vs. Its Power Supply for the Application Circuit

OBSOLETE

PCB DESIGN FOR OPTIMIZED THERMAL PERFORMANCE

The AD8384's total maximum power dissipation is partly load dependent. In a 6-channel 60Hz XGA system running at a 65 MHz clock rate, the total maximum power dissipation is 1.6 W at a 150 pF LCD input capacitance.

At a clock rate of 100 MHz, the total maximum power dissipation can exceed 2 W, as shown in Table 14, for a black-to-white video output voltage swing of 4 V and 5 V.

Table 14. Power Dissipation

		V_{SWING} = 5 V		V_{SWING} = 4 V	
C_{LOAD} (pF)	$P_{QUIESCENT}$ (W)	$P_{DYNAMIC}$ (W)	P_{TOTAL} (W)	$P_{DYNAMIC}$ (W)	P_{TOTAL} (W)
150	1.12	0.82	1.94	0.71	1.83
200	1.12	1.01	2.13	0.86	1.98
250	1.12	1.21	2.33	1.01	2.13
300	1.12	1.41	2.53	1.17	2.29

Although the maximum safe operating junction temperature is higher, the AD8384 is 100% tested at a junction temperature of 125°C. Consequently, the maximum guaranteed operating junction temperature is 125°C. To limit the maximum junction temperature at or below the guaranteed maximum, the package, in conjunction with the PCB, must effectively conduct heat away from the junction.

The AD8384 package is designed to provide enhanced thermal characteristics through the exposed die paddle on the bottom surface of the package. In order to take full advantage of this feature, the exposed paddle must be in direct thermal contact with the PCB, which then serves as a heat sink.

A thermally effective PCB must incorporate two thermal pads and a thermal via structure. The thermal pad on the top surface of the PCB provides a solderable contact surface on the top surface of the PCB. The thermal pad on the bottom PCB layer provides a surface in direct contact with the ambient. The thermal via structure provides a thermal path to the inner and bottom layers of the PCB to remove heat.

THERMAL PAD DESIGN

To minimize thermal performance degradation of production PCBs, the contact area between the thermal pad and the PCB should be maximized. Therefore, the size of the thermal pad on the top PCB layer should match the exposed paddle. The second thermal pad of the same size should be placed on the bottom side of the PCB. At least one thermal pad should be in direct thermal contact with an external plane such as AVCC or GND.

THERMAL VIA STRUCTURE DESIGN

Effective heat transfer from the top to the inner and bottom layers of the PCB requires thermal vias incorporated into the thermal pad design. Thermal performance increases logarithmically with the number of vias.

Near optimum thermal performance of production PCBs is attained only when tightly spaced thermal vias are placed on the full extent of the thermal pad.

OBSOLETE

AD8384 PCB DESIGN RECOMMENDATIONS

Top PCB Layer
Land Pattern Dimensions

Pad Size: 0.6 mm × 0.25 mm
Pad Pitch: 0.5 mm
Thermal Pad Size: 6 mm × 6 mm
Thermal via structure: 0.25 mm to 0.35 mm diameter via holes on a 0.5 mm to 1.0 mm grid.

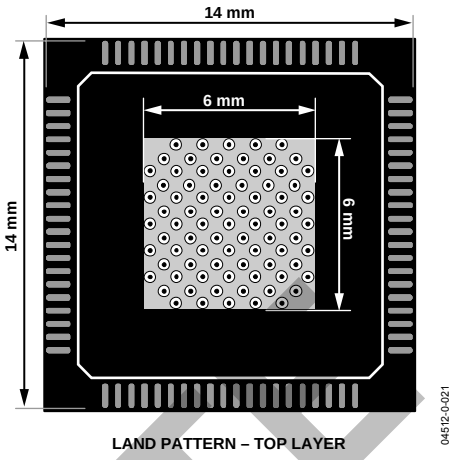

Figure 21. Land Pattern—Top Layer

Bottom PCB Layer
Thermal Pad and Thermal Via Connections

The thermal pad on the solder side is connected to a plane. Use of thermal spokes is not recommended when connecting the thermal pads or via structure to the plane.

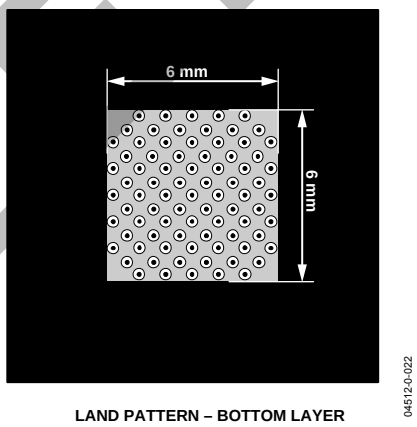

Figure 22. Land Pattern—Bottom Layer

Solder Masking

Solder masking of the via holes on the top layer of the PCB plugs the via holes, inhibiting solder flow into the holes. To minimize the formation of solder voids due to solder flowing into the via holes (solder wicking), the via diameter should be made small and an optional solder mask may be used. To optimize thermal pad coverage, the solder mask's diameter should be no more than 0.1 mm larger than the via hole diameter.

Solder Mask—Top Layer

Pads: Set by the customer's PCB design rules.

Thermal Via Holes: Circular mask, centered on the via holes. Diameter of the mask should be 0.1 mm larger than the via hole diameter.

Solder Mask—Bottom Layer

Set by customer's PCB design rules.

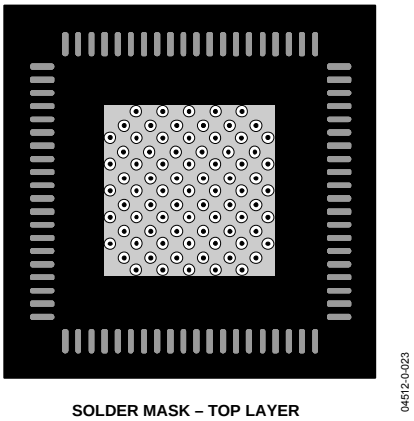

Figure 23. Solder Mask—Top Layer

OBSOLETE

OUTLINE DIMENSIONS

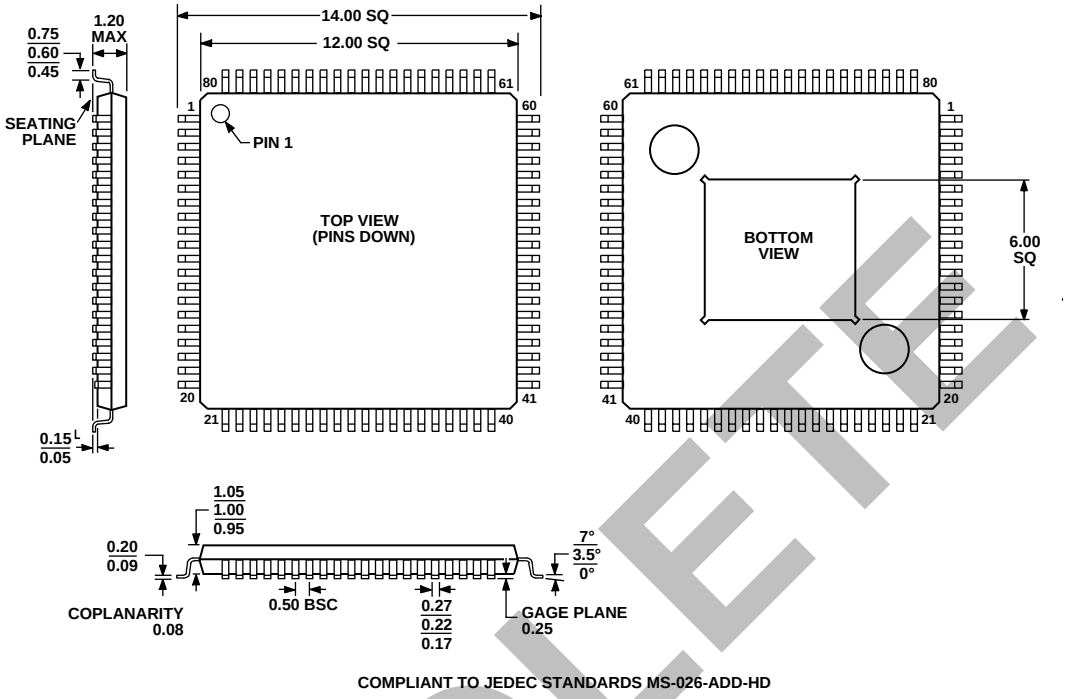

Figure 24. 80-Lead, Thermally Enhanced Thin Quad Flatpack Package [TQFP] (SV-80)
Dimensions shown in millimeters

OBSOLETE

ESD CAUTION

ESD (electrostatic discharge) sensitive device. Electrostatic charges as high as 4000 V readily accumulate on the human body and test equipment and can discharge without detection. Although this product features proprietary ESD protection circuitry, permanent damage may occur on devices subjected to high energy electrostatic discharges. Therefore, proper ESD precautions are recommended to avoid performance degradation or loss of functionality.



ORDERING GUIDE

Model	Temperature Range	Package Description	Package Option
AD8384ASVZ[11]	0°C to 85°C	80-Lead Thin Quad Flat Pack	SV-80

[11] Z = Pb-free part.

NOTES

OBSOLETE

NOTES

OBSOLETE

NOTES

OBSOLETE

© 2004 Analog Devices, Inc. All rights reserved. Trademarks and registered trademarks are the property of their respective owners.
D04512–0–1/04(0)

ANALOG DEVICES

www.analog.com