Zero Drift, Bidirectional Current Shunt Monitor

Data Sheet

AD8218

FEATURES

- High common-mode voltage range
  - 4 V to 80 V operating
  - −0.3 V to +85 V survival
- Buffered output voltage
- Gain = 20 V/V
- Wide operating temperature range: −40°C to +125°C
- Excellent ac and dc performance
  - ±100 nV/°C typical offset drift
  - ±50 µV typical offset
  - ±5 ppm/°C typical gain drift
  - 110 dB typical CMRR at dc

APPLICATIONS

- High-side current sensing
  - 48 V telecom
  - Power management
  - Base stations
  - Bidirectional motor control
  - Precision high voltage current sources

FUNCTIONAL BLOCK DIAGRAM

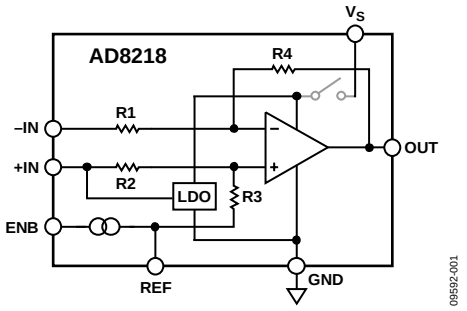

Figure 1.

GENERAL DESCRIPTION

The AD8218 is a high voltage, high resolution current shunt amplifier. It features a set gain of 20 V/V, with a maximum ±0.35% gain error over the entire temperature range. The buffered output voltage directly interfaces with any typical converter. The AD8218 offers excellent input common-mode rejection from 4 V to 80 V. The AD8218 performs bidirectional current measurements across a shunt resistor in a variety of industrial and telecom applications, including motor control, battery management, and base station power amplifier bias control.

The AD8218 offers breakthrough performance throughout the −40°C to +125°C temperature range. It features a zero-drift core, which leads to a typical offset drift of ±100 nV/°C throughout the operating temperature range and the common-mode voltage range. Special attention is devoted to output linearity being maintained throughout the input differential voltage range of 0 mV to ~250 mV. The AD8218 also includes an internal 80 mV reference that can be enabled for optimal dynamic range in unidirectional current sense applications. The typical input offset voltage is ±50 µV.

The AD8218 is offered in an 8-lead MSOP package and an 8-lead LFCSP package.

Rev. B
Document Feedback
Information furnished by Analog Devices is believed to be accurate and reliable. However, no responsibility is assumed by Analog Devices for its use, nor for any infringements of patents or other rights of third parties that may result from its use. Specifications subject to change without notice. No license is granted by implication or otherwise under any patent or patent rights of Analog Devices. Trademarks and registered trademarks are the property of their respective owners.

One Technology Way, P.O. Box 9106, Norwood, MA 02062-9106, U.S.A.
Tel: 781.329.4700 ©2011–2013 Analog Devices, Inc. All rights reserved.
Technical Support www.analog.com

TABLE OF CONTENTS

Features ... 1
Applications ... 1
Functional Block Diagram ... 1
General Description ... 1
Revision History ... 2
Specifications ... 3
Absolute Maximum Ratings ... 4
ESD Caution ... 4
Pin Configurations and Function Descriptions ... 5
Typical Performance Characteristics ... 6
Theory of Operation ... 10
Amplifier Core ... 10
Output Clamping ... 10
Application Notes ... 11
Supply (V_S) Connections ... 11
Enable Pin (ENB) Operation ... 11
Applications Information ... 12
Unidirectional High-Side Current Sensing ... 12
Bidirectional High-Side Current Sensing ... 12
Motor Control Current Sensing ... 12
Outline Dimensions ... 13
Ordering Guide ... 13

REVISION HISTORY

4/13—Rev. A to Rev. B

Added 8-Lead LFCSP ... Universal
Changes to General Description Section ... 1
Added Figure 3, Renumbered Sequentially ... 5
Changes to Table 3 ... 5
Added Figure 37 ... 13
Updated Outline Dimensions ... 13
Changes to Ordering Guide ... 13

2/11—Rev. 0 to Rev. A

Changes to Features ... 1

1/11—Revision 0: Initial Version

SPECIFICATIONS

T_{OPR} = −40°C to +125°C, T_A = 25°C, R_L = 25 kΩ (R_L is the output load resistor), input common-mode voltage (V_{CM}) = 4 V, unless otherwise noted.

Table 1.

Parameter	Min	Typ	Max	Unit	Test Conditions/Comments
GAIN					
Initial		20		V/V	
Accuracy		±0.1		%	$V_O \geq 0.1$ V dc, T_A
Accuracy over Temperature			±0.35	%	T_{OPR}
Gain vs. Temperature		±5		ppm/°C	T_{OPR}
VOLTAGE OFFSET					
Offset Voltage (RTI[1])			±200	µV	25°C
Over Temperature (RTI[1])			±300	µV	T_{OPR}
Offset Drift		±100		nV/°C	T_{OPR}
INPUT					
Bias Current[2]		130		µA	T_A, input common mode = 4 V, V_S = 4 V
			220	µA	T_{OPR}, input common mode = 4 V, V_S = 4 V
Common-Mode Input Voltage Range	4		80	V	Common-mode continuous
Differential Input Voltage Range[3]	0		250	mV	Differential input voltage
Common-Mode Rejection (CMRR)	90	110		dB	T_{OPR}
OUTPUT					
Output Voltage Range Low	0.01			V	
Output Voltage Range High			V_S − 0.1	V	T_A
Output Impedance		2		Ω	
INTERNAL REFERENCE (ENB PIN CONNECTED TO GND)					
Initial Value		80		mV	Voltage at OUT with a differential input of 0 V and a common-mode input of 4 V
Offset (RTI[1])	−150		+150	µV	
Offset Drift (RTO[4])		±10		µV/°C	V_S = NC or V_S = 5 V
REFERENCE INPUT (REF, PIN 7)					
Input Impedance		1.5		MΩ	
Input Current	3		60	µA	Dependent on V_{REF}/1.5 MΩ
Input Voltage Range	0		5	V	ENB not connected to GND
Input-to-Output Gain		1 ± 0.0001		V/V	
DYNAMIC RESPONSE					
Small-Signal −3 dB Bandwidth		450		kHz	
Slew Rate		1		V/µs	
NOISE					
0.1 Hz to 10 Hz (RTI[1])		2.3		µV p-p	
Spectral Density, 1 kHz (RTI[1])		110		nV/√Hz	
POWER SUPPLY					
Operating Range (Pin 2 Floating)	4		80	V	Power regulated from common mode, V_S pin floating
V_S Range (Pin 2)	4		5.5	V	V_S must be less than 5.5 V if standalone supply is used
Quiescent Current over Temperature			800	µA	Throughout input common mode
Power Supply Rejection Ratio (PSRR)	90	110		dB	T_{OPR}
TEMPERATURE RANGE					
For Specified Performance	−40		+125	°C	

[1] RTI = referred to input.
[2] Refer to Figure 9 for more information on the input bias current. This current varies based on the input common-mode voltage. The input bias current flowing to the +IN pin is also the supply current to the internal LDO.
[3] The differential input voltage is specified as 250 mV because the output is internally clamped to 5.2 V. This ensures that the output voltage does not exceed the typical ADC input range, preventing damage. The AD8218 can survive up to ±5 V differentially but will only amplify ~250 mV correctly due to the output clamping function.
[4] RTO = referred to output.

ABSOLUTE MAXIMUM RATINGS

Table 2.

Parameter	Rating
Maximum Input Voltage (+IN, –IN to GND)	–0.3 V to +85 V
Differential Input Voltage (+IN to –IN)	±5 V
Human Body Model (HBM) ESD Rating	±2000 V
Operating Temperature Range (T_{OPR})	–40°C to +125°C
Storage Temperature Range	–65°C to +150°C
Output Short-Circuit Duration	Indefinite

Stresses above those listed under Absolute Maximum Ratings may cause permanent damage to the device. This is a stress rating only; functional operation of the device at these or any other conditions above those indicated in the operational section of this specification is not implied. Exposure to absolute maximum rating conditions for extended periods may affect device reliability.

ESD CAUTION



ESD (electrostatic discharge) sensitive device. Charged devices and circuit boards can discharge without detection. Although this product features patented or proprietary protection circuitry, damage may occur on devices subjected to high energy ESD. Therefore, proper ESD precautions should be taken to avoid performance degradation or loss of functionality.

PIN CONFIGURATIONS AND FUNCTION DESCRIPTIONS

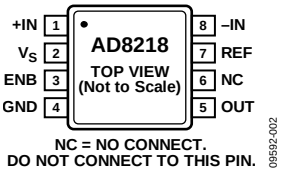

Figure 2. MSOP Pin Configuration

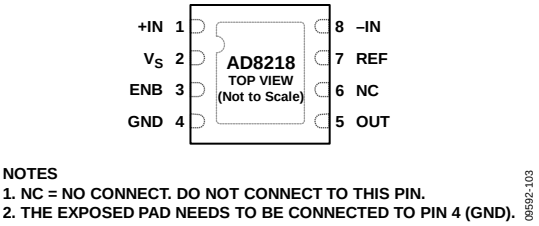

Figure 3. LFCSP Pin Configuration

Table 3. Pin Function Descriptions

Pin No.	Mnemonic	Description
1	+IN	Noninverting Input.
2	V_S	Supply Pin. Bypass with a standard 0.1 µF capacitor.
3	ENB	Enable. Connect to GND to enable the internal 80 mV reference.
4	GND	Ground.
5	OUT	Output.
6	NC	No Connect. Do not connect to this pin.
7	REF	Reference Input. Connect to a low impedance voltage.
8	–IN	Inverting Input.
	EPAD	Exposed Pad. The exposed pad needs to be connected to Pin 4 (GND). Applies to LFCSP only.

TYPICAL PERFORMANCE CHARACTERISTICS

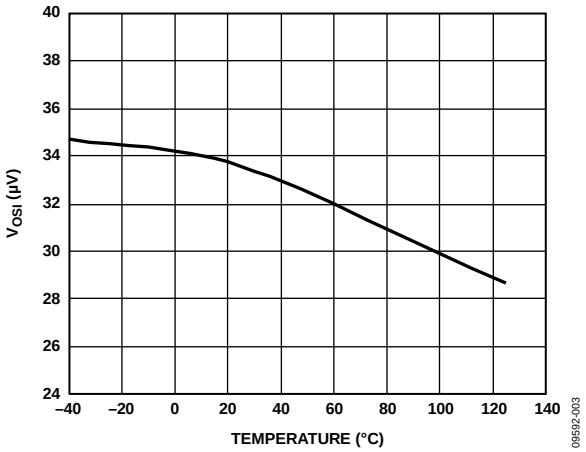

Figure 4. Typical Input Offset vs. Temperature

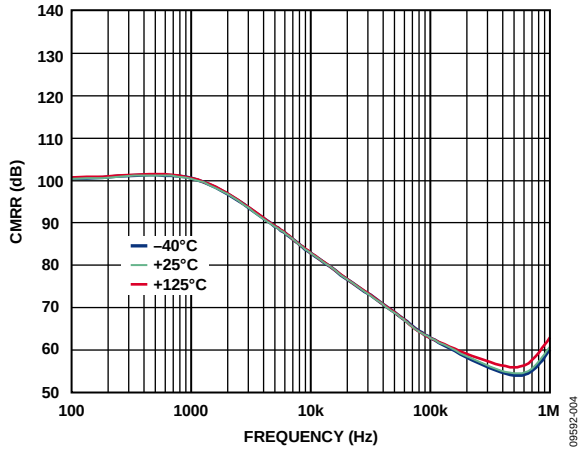

Figure 5. Typical CMRR vs. Frequency

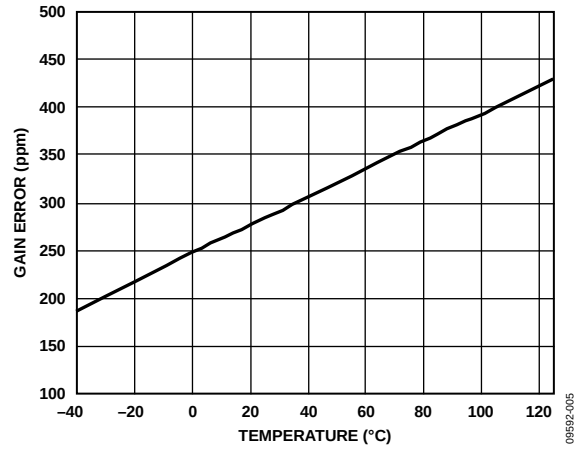

Figure 6. Typical Gain Error vs. Temperature

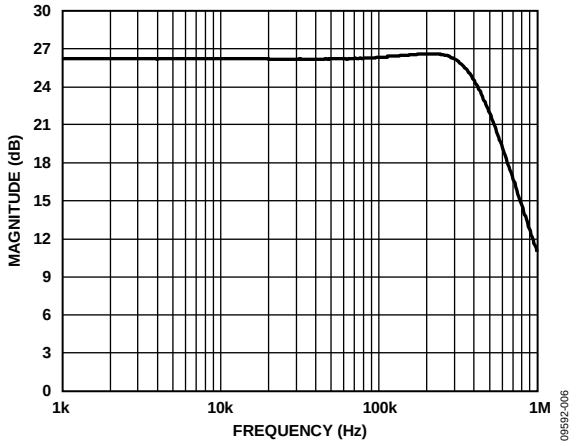

Figure 7. Typical Small-Signal Bandwidth (V_{OUT} = 200 mV p-p)

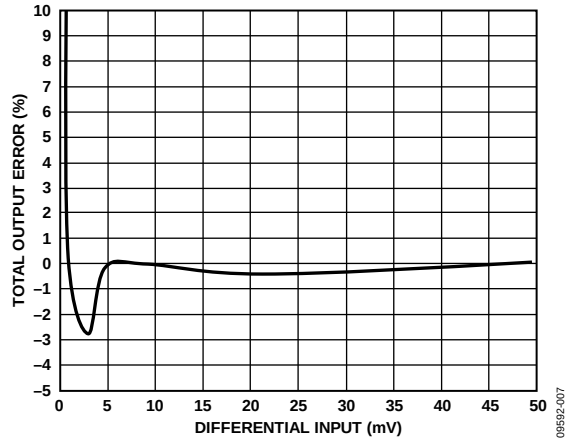

Figure 8. Total Output Error vs. Differential Input Voltage

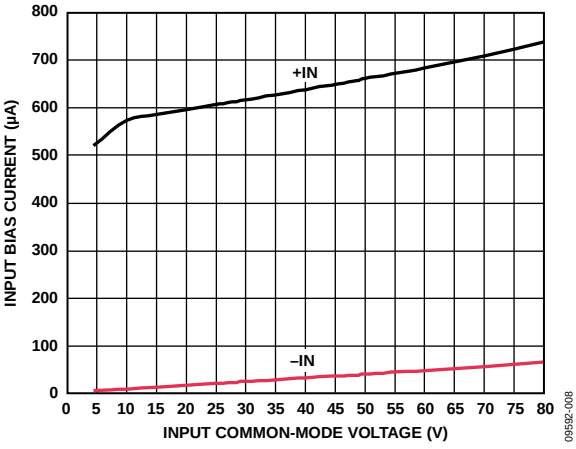

Figure 9. Input Bias Current vs. Input Common-Mode Voltage (Differential Input Voltage = 5 mV, V_S = NC)

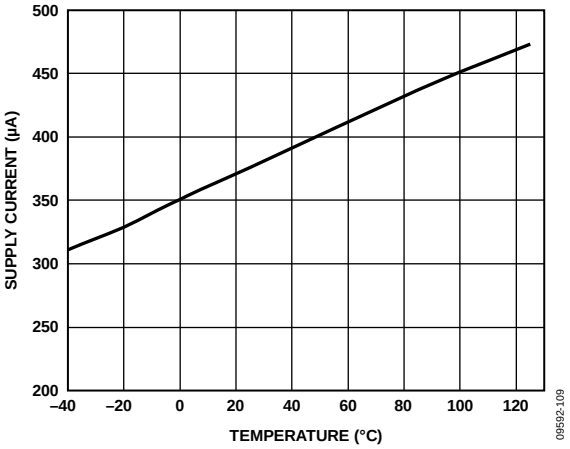

Figure 10. Supply Current vs. Temperature (V_S = 5 V, V_{CM} = 12 V)

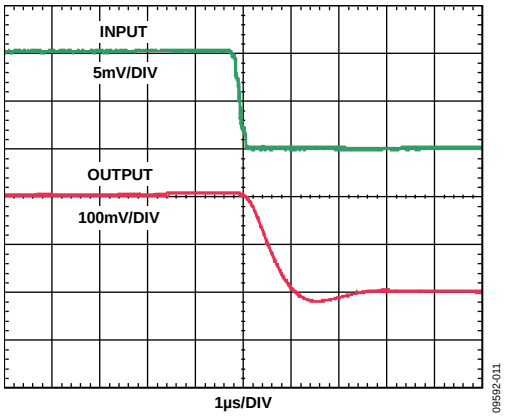

Figure 13. Fall Time (Differential Input = 10 mV)

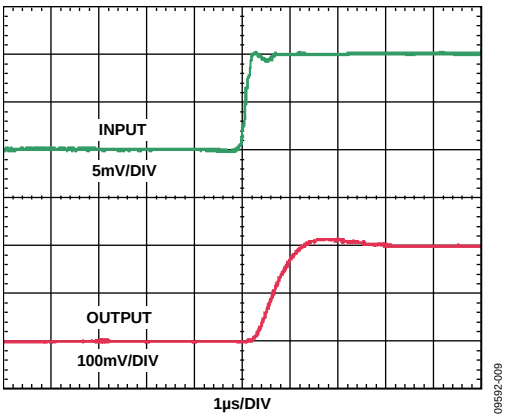

Figure 11. Rise Time (Differential Input = 10 mV)

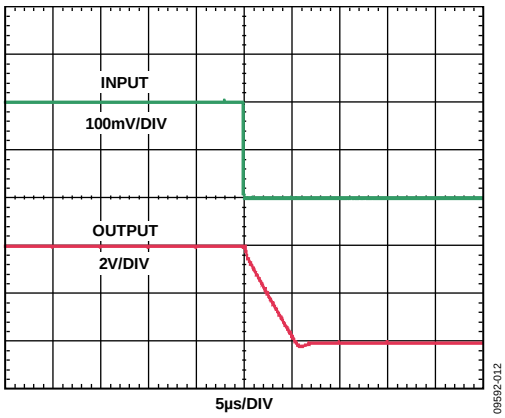

Figure 14. Fall Time (Differential Input = 200 mV)

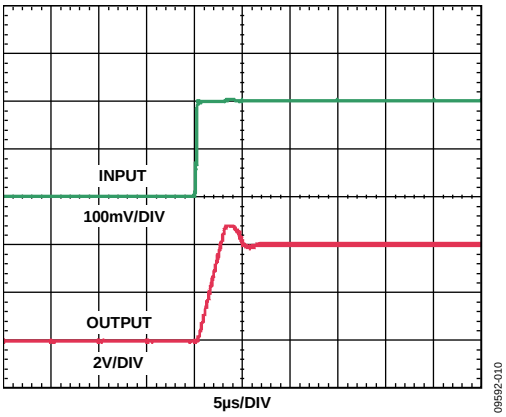

Figure 12. Rise Time (Differential Input = 200 mV)

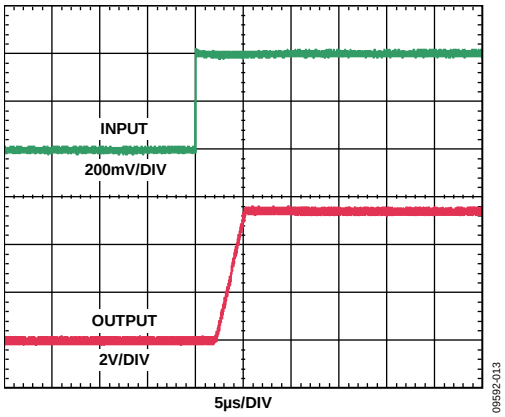

Figure 15. Differential Overload Recovery, Rising

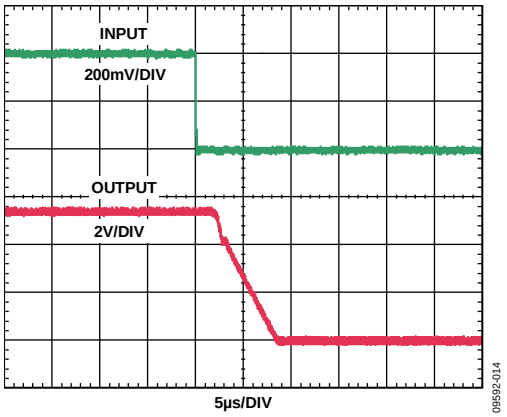

Figure 16. Differential Overload Recovery, Falling

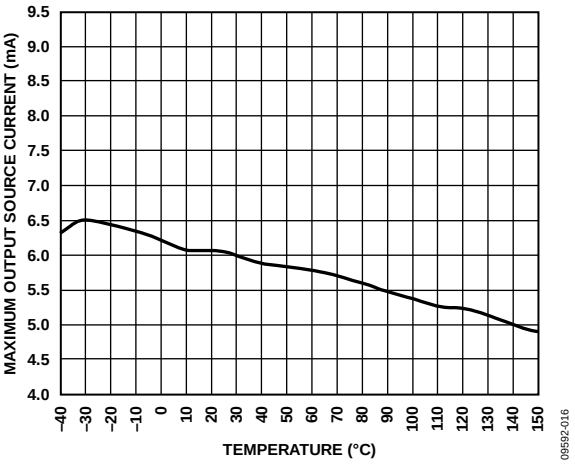

Figure 19. Maximum Output Source Current vs. Temperature

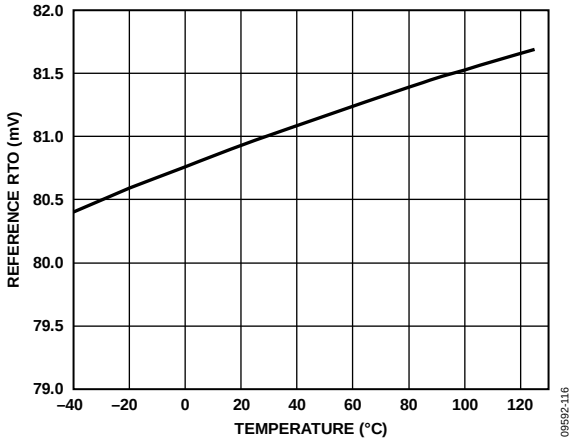

Figure 17. Internal Reference Voltage vs. Temperature
(V_S = 5 V, V_S = NC, V_{CM} = 12 V, Pin 1 (+IN) and Pin 8 (–IN) Shorted, Pin 3 (ENB) Shorted to Pin 4 (GND))

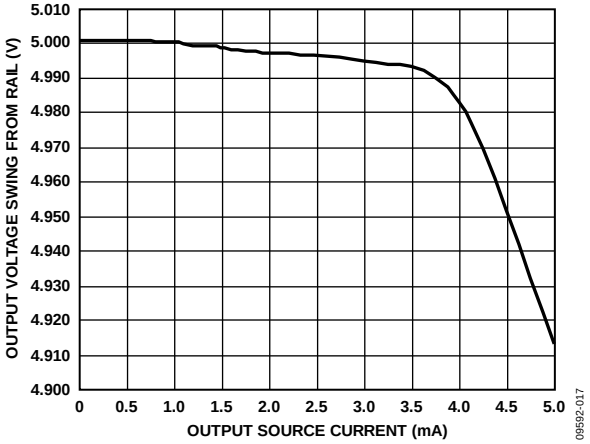

Figure 20. Output Voltage Swing from Rail vs. Output Source Current

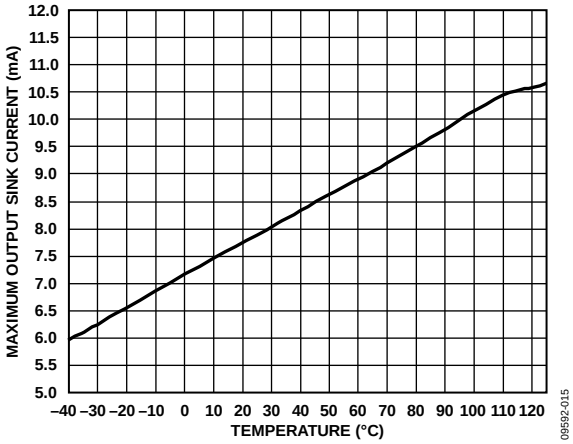

Figure 18. Maximum Output Sink Current vs. Temperature

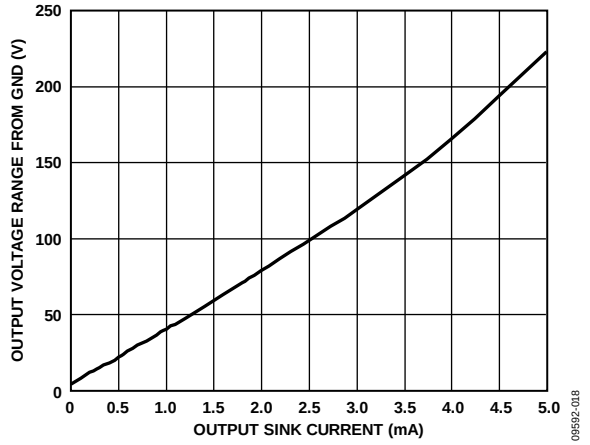

Figure 21. Output Voltage Range from GND vs. Output Sink Current

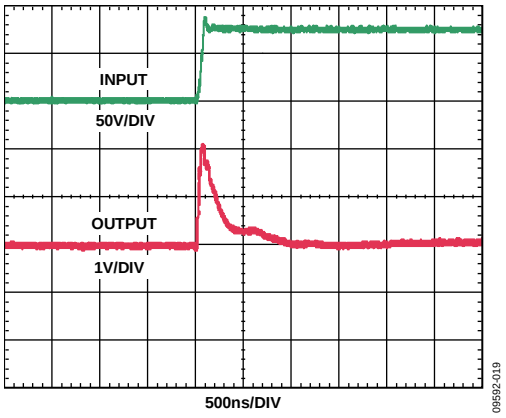

Figure 22. Common-Mode Step Response, Rising

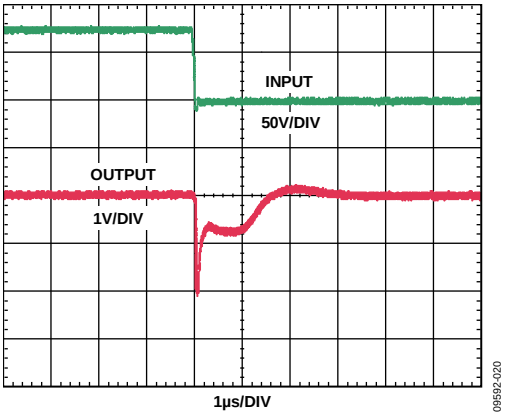

Figure 23. Common-Mode Step Response, Falling

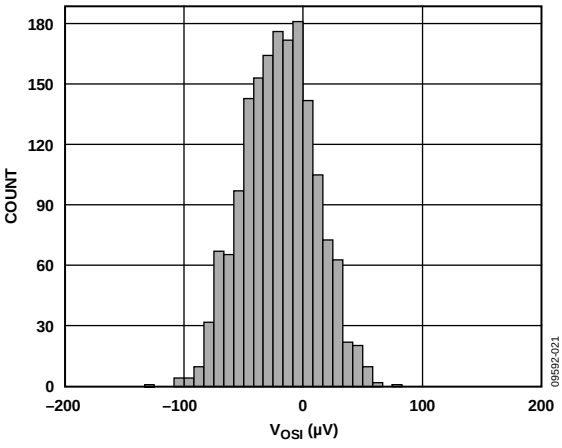

Figure 24. Input Offset Distribution

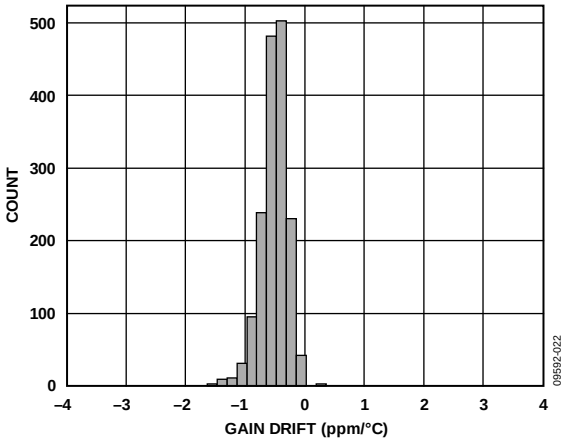

Figure 25. Gain Drift Distribution

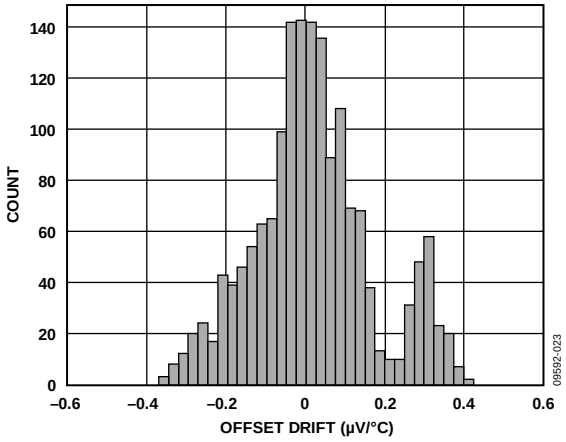

Figure 26. Input Offset Drift Distribution

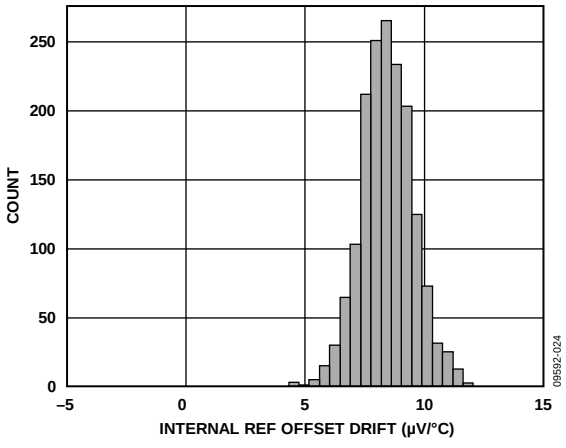

Figure 27. Internal REF Offset Drift Distribution, Referred to Output (RTO)

THEORY OF OPERATION

AMPLIFIER CORE

In typical applications, the AD8218 amplifies a small differential input voltage generated by the load current flowing through a shunt resistor. The AD8218 rejects high common-mode voltages (up to 80 V) and provides a ground-referenced, buffered output. Figure 28 shows a simplified schematic of the AD8218.

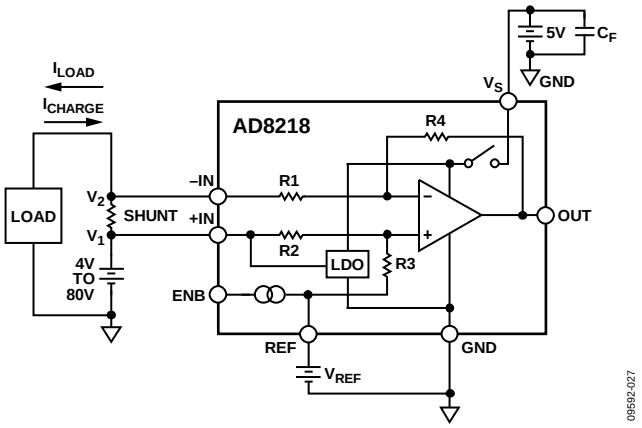

Figure 28. Simplified Schematic

The AD8218 is configured as a difference amplifier. The transfer function is

$$OUT = ((R4/R1) \times (V_1 - V_2)) + V_{REF}$$

Resistors R4 and R1 are matched to within 0.01% and have values of 1.5 MΩ and 75 kΩ, respectively, meaning an input-to-output total gain of 20 V/V for the AD8218. The difference between V_1 and V_2 is the voltage across the shunt resistor, or V_{IN}. Therefore, the input-to-output transfer function of the AD8218 is

$$OUT\ (\text{V}) = (20 \times V_{IN}) + V_{REF}$$

The AD8218 accurately amplifies the input differential signal, rejecting high voltage common modes ranging from 4 V to 80 V.

The main amplifier uses a novel zero-drift architecture, providing the end user with breakthrough temperature stability. The offset drift is typically less than ±100 nV/°C. This performance leads to optimal accuracy and dynamic range.

OUTPUT CLAMPING

After the input common-mode voltage in the application is above 5.2 V, the internal LDO output of the AD8218 also reaches its maximum value of 5.2 V, which is the maximum output range of the AD8218. Because in typical applications the output interfaces with a converter, clamping the AD8218 output voltage to 5.2 V ensures that the ADC input is not damaged due to excessive overvoltage.

APPLICATION NOTES

SUPPLY (V_S) CONNECTIONS

The AD8218 includes an internal LDO, which allows the user to leave the V_S pin floating, powering the AD8218 directly from the voltage present at Pin 1 (+IN), provided this voltage is in the 4 V to 80 V range. A typical connection for the part in this configuration is shown in Figure 29.

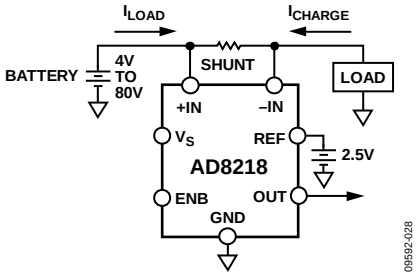

Figure 29. Operation with No V_S Connection

The AD8218 can also be powered from a separate low impedance supply at Pin 2 (V_S); however, this voltage can only be in the 4 V to 5.5 V range. In cases where the high voltage bus is susceptible to noise, transients, or high voltage fluctuations and a 5 V supply is available, the AD8218 can be used in the mode depicted in Figure 30.

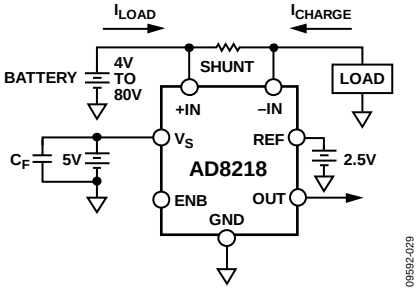

Figure 30. 5 V Supply Operation

ENABLE PIN (ENB) OPERATION

The AD8218 includes an internal reference that can be enabled by connecting Pin 3 (ENB) to ground. This mode of operation is shown in Figure 31.

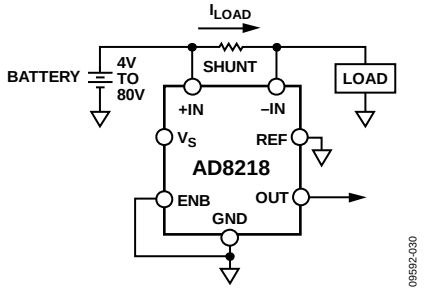

Figure 31. Enabling the Internal 80 mV Reference

In this configuration, the internal 80 mV reference is activated, and the output of the AD8218 is 80 mV when the differential input voltage is 0 V and the voltage at Pin 7 (REF) is also 0 V. This internal reference is useful in unidirectional current measurements where the current being monitored has a very wide range. Setting the output starting point to 80 mV means that when the load current through the shunt resistor is 0 A, the output is 80 mV. This ensures that the output errors due to initial offset and the output saturation range of the amplifier are overcome. In this mode, the transfer function of the AD8218 becomes

$$OUT\,(\mathrm{V}) = OUT\,(\mathrm{V}) = (20 \times V_{IN}) + 0.08\ \mathrm{V}$$

If Pin 3 is connected to ground, and therefore the internal reference is enabled, 80 mV must always be added to the transfer function of the AD8218.

APPLICATIONS INFORMATION

UNIDIRECTIONAL HIGH-SIDE CURRENT SENSING

In the unidirectional high-side current sensing configuration, the shunt resistor is referenced to the battery (see Figure 32). High voltage is present at the inputs of the current sense amplifier. When the shunt is battery referenced, the AD8218 produces a linear ground-referenced analog output. The supply pin, V_S, of the AD8218 can either be connected to a 5 V supply or left floating (see the Supply (V_S) Connections section).

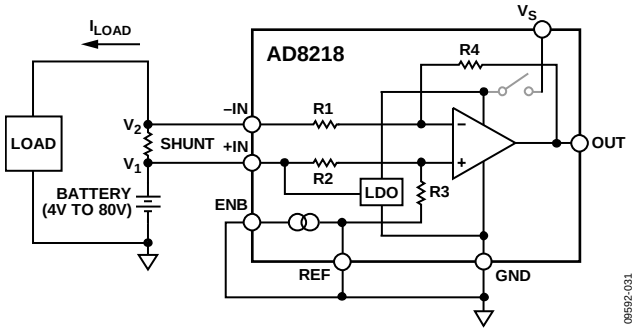

Figure 32. Unidirectional Operation with ENB Connected to GND

The output transfer function curve for unidirectional operation with ENB connected to GND is shown in Figure 33.

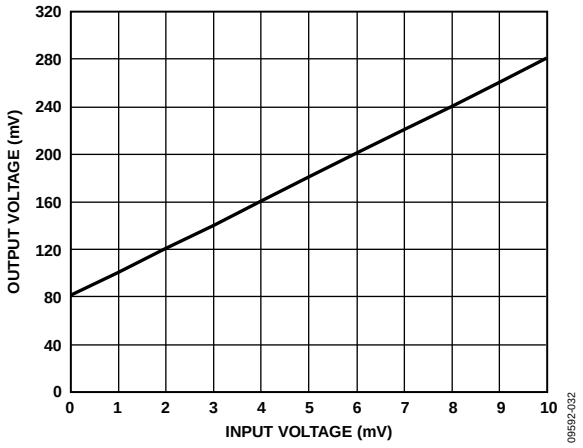

Figure 33. Output Transfer Function with ENB Connected to GND

BIDIRECTIONAL HIGH-SIDE CURRENT SENSING

Inputting a voltage at Pin 7 (REF) offsets the output of the AD8218 and allows for bidirectional current sensing. The transfer function from the REF pin to the output is 1 V/V. For example, a 2.5 V REF input offsets the output of the AD8218 to 2.5 V. See Figure 34 for typical connections. The user must ensure that the voltage applied at Pin 7 (REF) is from a low impedance source.

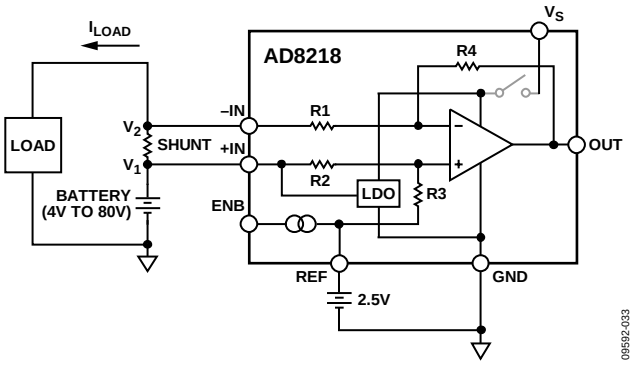

Figure 34. Bidirectional Operation Using a 2.5 V Reference Input

The output transfer function curve for bidirectional operation using a 2.5 V reference input is shown in Figure 35.

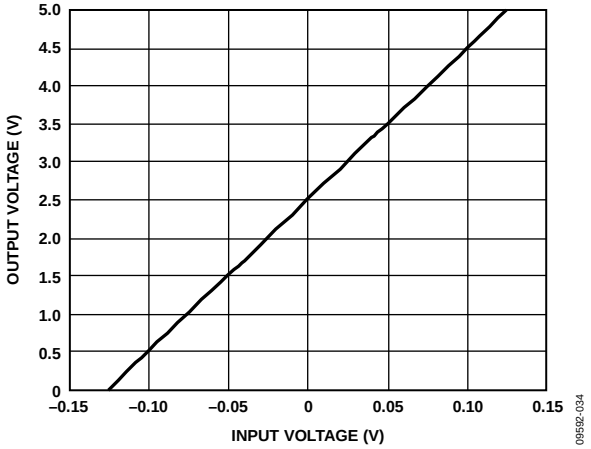

Figure 35. Transfer Function When Using a 2.5 V Reference Input

MOTOR CONTROL CURRENT SENSING

The AD8218 is a practical, accurate solution for high-side current sensing in motor control applications. In cases where the shunt resistor is referenced to a battery and the current flowing is bidirectional (as shown in Figure 36), the AD8218 monitors the current with no additional supply pin necessary.

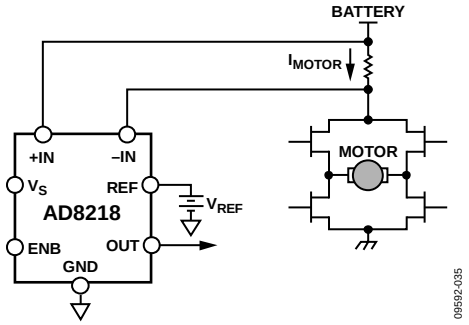

Figure 36. High-Side Current Sensing in Motor Control

OUTLINE DIMENSIONS

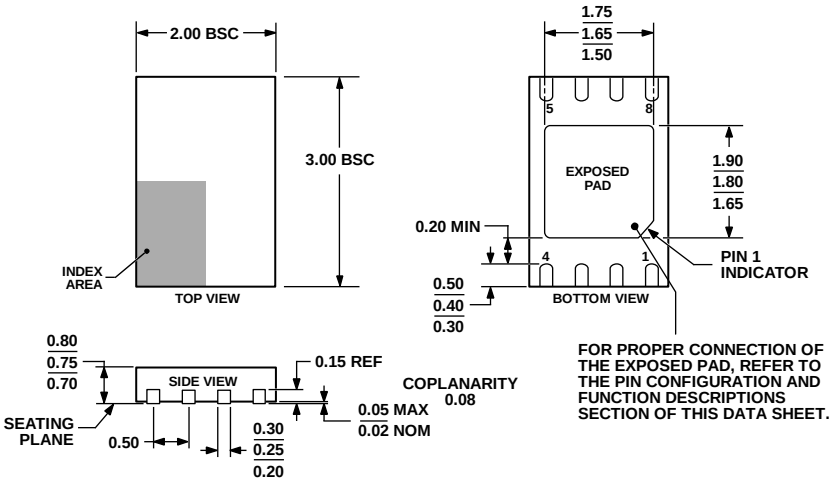

Figure 37. 8-Lead Lead Frame Chip Scale Package [LFCSP_WD]
2 mm × 3 mm Body, Very Very Thin, Dual Lead
(CP-8-4)
Dimensions shown in millimeters

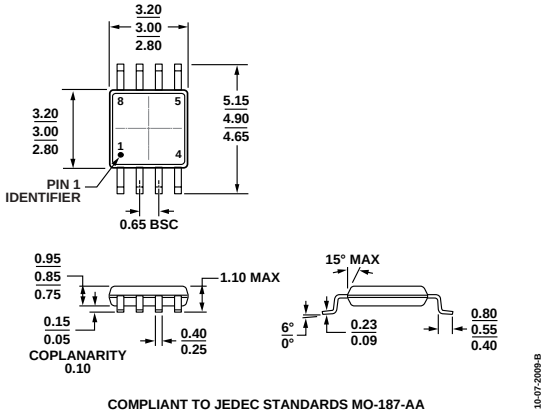

Figure 38. 8-Lead Mini Small Outline Package [MSOP]
(RM-8)
Dimensions shown in millimeters

ORDERING GUIDE

Model[1]	Temperature Range	Package Description	Package Option	Branding
AD8218BCPZ-RL	−40°C to +125°C	8-Lead Lead Frame Chip Scale Package [LFCSP_WD]	CP-8-4	Y5A
AD8218BCPZ-WP	−40°C to +125°C	8-Lead Lead Frame Chip Scale Package [LFCSP_WD]	CP-8-4	Y5A
AD8218BRMZ	−40°C to +125°C	8-Lead Mini Small Outline Package [MSOP]	RM-8	Y3K
AD8218BRMZ-RL	−40°C to +125°C	8-Lead Mini Small Outline Package [MSOP]	RM-8	Y3K

[1] Z = RoHS Compliant Part.

NOTES

NOTES

NOTES

©2011–2013 Analog Devices, Inc. All rights reserved. Trademarks and registered trademarks are the property of their respective owners.
D09592-0-4/13(B)