11-Bit Resolution Simultaneous Sampling A/D Converter

AD7861

FEATURES

11-Bit Resolution Analog-to-Digital Converter
Seven Single-Ended Analog Inputs
Four Input Channels Simultaneously Sampled
Expansion with 4 Multiplexed Inputs
Internal 2.5 V Reference
3.2 μs Conversion Time per Channel
User Definable Channel Sequencing
Single Supply +5 V Operation
Double Buffered Register Outputs
6.25 MHz to 12.5 MHz Operating Clock Range

APPLICATIONS

Motor Control
3-Phase Power Measurement
Cellular Phones
Data Acquisition

FUNCTIONAL BLOCK DIAGRAM

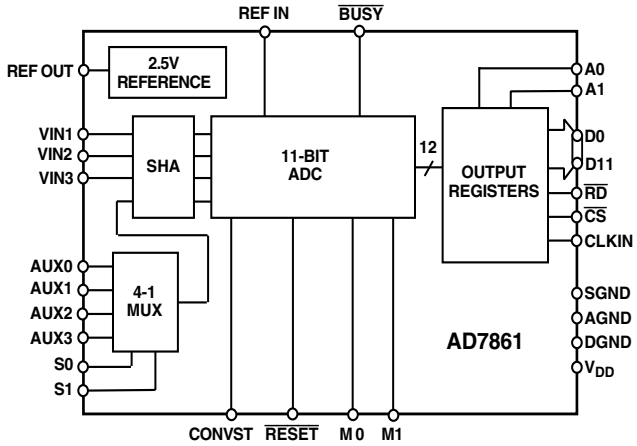

GENERAL DESCRIPTION

The AD7861 is a multichannel simultaneous sampling A/D Converter (ADC) configured for the acquisition of voltage inputs in a motor control solution or three-phase power system.

The AD7861 combined with Analog Devices' 16-bit fixed-point digital signal processor (DSP) provides a low cost 16-bit fixed-point microcontroller solution.

The input stage has been designed to accommodate the types of signals frequently found in motor drives. The VIN1, VIN2, and VIN3 channels are simultaneously sampled inputs suitable for stator current acquisition. The AUX0–AUX3 channels are multiplexed and are suitable for slower moving inputs such as temperature and bus voltage of the diode rectifier output in a motor control application.

PRODUCT HIGHLIGHTS

Simultaneous Sampling of Four Inputs

Four channel sample and hold amplifier (SHA) allows out of phase input signals to be sampled simultaneously, preserving the relative phase information. Sample-and-hold acquisition time is 1.6 μs and conversion time per channel is 3.2 μs (using a 12.5 MHz system clock).

Flexible Analog Channel Sequencing

AD7861 supports acquisition of 2, 3 or 4 channels per group. Converted channel results are stored in registers and the data can be read in any order. The sampling and conversion time for two channels is 8 μs, three channels is 11.2 μs, and four channels is 14.4 μs (using a 12.5 MHz system clock).

Single 5 V dc Operation

Low power, digital process.

REV. B

Information furnished by Analog Devices is believed to be accurate and reliable. However, no responsibility is assumed by Analog Devices for its use, nor for any infringements of patents or other rights of third parties which may result from its use. No license is granted by implication or otherwise under any patent or patent rights of Analog Devices.

One Technology Way, P.O. Box 9106, Norwood, MA 02062-9106, U.S.A.
Tel: 781/329-4700 World Wide Web Site: http://www.analog.com
Fax: 781/326-8703
© Analog Devices, Inc., 2000

AD7861—SPECIFICATIONS (V_{DD} = 5 V ± 5%; T_A = –40°C to +85°C; REFIN = 2.5 V; Ext CLK @ 12.5 MHz, unless otherwise noted)

Parameter	AD7861AP	Units	Conditions/Comments
DC ACCURACY			
Resolution	11	Bits	Twos Complement Data Format
Relative Accuracy	±2	LSB max	Integral Nonlinearity
Differential Nonlinearity	±2.5	LSB max	
Bias Offset Error	±9	LSB max	Any Channel
Bias Offset Error Match	4	LSB max	Between Channels
Full-Scale Error	±13	LSB max	Any Channel
Full-Scale Error Match	4	LSB max	Between Channels
DYNAMIC PERFORMANCE			
Signal-to-Noise Ratio (SNR)	60	dB min	f_{IN} = 1 kHz Sine Wave, f_{SAMPLE} = 75 kHz
Total Harmonic Distortion (THD)	–60	dB max	f_{IN} = 1 kHz Sine Wave, f_{SAMPLE} = 75 kHz
Peak Harmonic or Spurious Noise	–60	dB max	f_{IN} = 1 kHz Sine Wave, f_{SAMPLE} = 75 kHz
Channel-to-Channel Isolation			
M1 = 0	–58	dB max	1 kHz Sine Wave Applied to Unselected Channels
M1 = 1	–53	dB max	1 kHz Sine Wave Applied to Unselected Channels
REFERENCE			
Input Voltage Range (REF IN)	2.5	V	
Input Current	50	µA max	
Onboard Reference Output (REF OUT)	2.5	V	
Reference Tolerance	±5	%	
Reference Drive Capability	±100	µA max	
SAMPLE-AND-HOLD			
Acquisition Time	1.6	µs	20 CLK Cycles @ 12.5 MHz
Aperture Delay Time	200	ns max	
Aperture Delay Time Match	20	ns max	
Droop Rate	5	mV/ms max	
LOGIC			
Input High Voltage (V_{IH})	2	V min	
Input Low Voltage (V_{IL})	0.8	V max	
Input Leakage Current	1	µA max	
Input Capacitance	20	pF typ	
(V_{OH})	4.5	V min	I_{SOURCE} Current = 20 µA, V_{DD} = 5 V
(V_{OL})	0.4	V max	I_{SINK} Current = 400 µA, V_{DD} = 5 V
Three-State Leakage Current	1	µA max	
CONVERSION RATE			
Conversion Time/Channel	40	CLK Cycles	
CONVST			
Pulsewidth	2	CLK Cycles min	
ANALOG INPUTS			
Nominal Input Level	0–5	V	VIN1, VIN2, VIN3, AUX0–AUX3
Input Current	100	µA	
Input Capacitance	10	pF	
SYSTEM CLOCK	6.25–12.5	MHz	
POWER REQUIREMENTS			
V_{DD}	5	V dc	
I_{DD}	10	mA max	

Table I. AD7861 Timing Parameters (T_A = –40°C to +85°C and V_{DD} = +5 V unless otherwise noted)

Number	Symbol	AD7861 Timing Requirements	Min	Max	Units
1	t_{su}csb_rdb	$\overline{CS}$ Low Before Falling Edge of $\overline{RD}$	0	–	ns
2	t_{su}addr_rdb	ADDR Valid Before Falling Edge of $\overline{RD}$	0	–	ns
3	t_{dly}rdb_data	DATA Valid After Falling Edge of $\overline{RD}$	–	25	ns
4	t_{pwl}rdb	$\overline{RD}$ Pulsewidth, Low	25	–	ns
5	t_{pwh}rdb	$\overline{RD}$ Pulsewidth, High	25	–	ns
6	t_{hd}rdb_data	DATA Hold After Rising Edge of $\overline{RD}$	10	–	ns
7	t_{hd}rdb_addr	ADDR Hold After Rising Edge of $\overline{RD}$	0	–	ns
8	t_{hd}rdb_csb	$\overline{CS}$ Hold After Rising Edge of $\overline{RD}$	0	–	ns
9	t_{per}clk	CLK Period	80	160	ns
10	t_{pwh}clk	CLK Pulsewidth, High	20	–	ns
11	t_{pwl}clk	CLK Pulsewidth, Low	20	–	ns
12	t_{pwl}resetb	$\overline{RESET}$ Pulsewidth, Low	2 × tperclk	–	ns

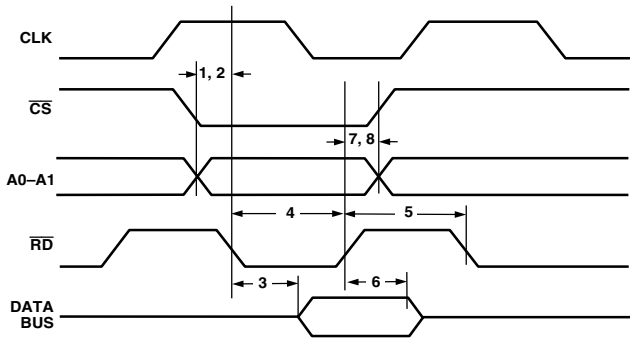

Figure 1. Clock and Reset Timing

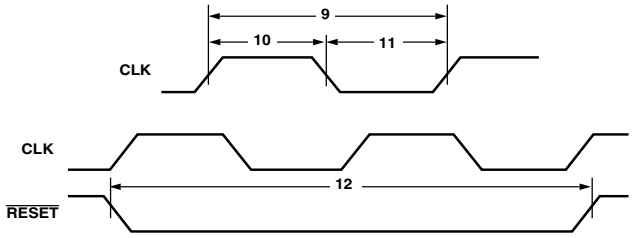

Figure 2. Write Cycle Timing Diagram

ABSOLUTE MAXIMUM RATINGS*

Supply Voltage (V_{DD}) . . . . . –0.3 V to +7.0 V
Digital Input Voltage . . . . . –0.3 V to V_{DD}
Analog Input Voltage . . . . . –0.3 V to V_{DD}
Analog Reference Input Voltage . . . . . –0.3 V to V_{DD}
Digital Output Voltage Swing . . . . . –0.3 V to V_{DD}
Analog Reference Output Swing . . . . . –0.3 V to V_{DD}
Operating Temperature . . . . . –40°C to +85°C
Lead Temperature (Soldering, 10 sec) . . . . . +280°C

*Stresses above those listed under Absolute Maximum Ratings may cause permanent damage to the device. This is a stress rating only; functional operation of the device at these or any other conditions above those indicated in the operational section of this specification is not implied. Exposure to absolute maximum rating conditions for extended periods may affect device reliability.

ORDERING GUIDE

Model	Temperature Range	Package Option
AD7861AP	–40°C to +85°C	P-44A

CAUTION

ESD (electrostatic discharge) sensitive device. Electrostatic charges as high as 4000 V readily accumulate on the human body and test equipment and can discharge without detection. Although the AD7861 features proprietary ESD protection circuitry, permanent damage may occur on devices subjected to high energy electrostatic discharges. Therefore, proper ESD precautions are recommended to avoid performance degradation or loss of functionality.



PIN DESCRIPTION

Pin	Mnemonic	Type	Description
1	AUX0	I/P	Auxiliary Input 0
2	REFIN	I/P	Analog Reference Input
3	AGND	GND	Analog Ground
4	REFOUT	O/P	Internal 2.5 Analog Reference
5	S0	I/P	Aux Channel Select 0
6	S1	I/P	Aux Channel Select 1
7	D0	O/P	Data Bit 0 LSB (Tied Low)
8	D1	O/P	Data Bit 1
9	D2	O/P	Data Bit 2
10	D3	O/P	Data Bit 3
11	D4	O/P	Data Bit 4
12	D5	O/P	Data Bit 5
13	D6	O/P	Data Bit 6
14	D7	O/P	Data Bit 7
15	D8	O/P	Data Bit 8
16	D9	O/P	Data Bit 9
17	D10	O/P	Data Bit 10
18	D11	O/P	Data Bit 11, MSB
19	DGND	GND	Logic Ground
20	DGND	GND	Logic Ground
21	V_{DD}	SUP	+5 V Digital Supply
22	M0	I/P	Conversion Mode Select 0
23	M1	I/P	Conversion Mode Select 1
24	CONVST	I/P	A/D Conversion Start
25	$\overline{CS}$	I/P	Chip Select
26	$\overline{RD}$	I/P	Read Input
27	$\overline{RESET}$	I/P	Chip Reset
28	A1	I/P	Register Address Select 1
29	A0	I/P	Register Address Select 0
30	NC	NC	No Connect
31	$\overline{BUSY}$	O/P	Busy, Conversion in Process
32	CLK	I/P	External Clock Input 6.25 MHz-12.5 MHz
33–34	DGND	GND	Logic Ground
35	SGND	GND	Signal Ground
36	V_{DD}	SUP	+5 V Analog Supply
37	VIN1	I/P	Analog Input 1
38–39	NC	NC	No Connect
40	VIN2	I/P	Analog Input 2
41	VIN3	I/P	Analog Input 3
42	AUX3	I/P	Auxiliary Input 3
43	AUX2	I/P	Auxiliary Input 2
44	AUX1	I/P	Auxiliary Input 1

PIN CONFIGURATION

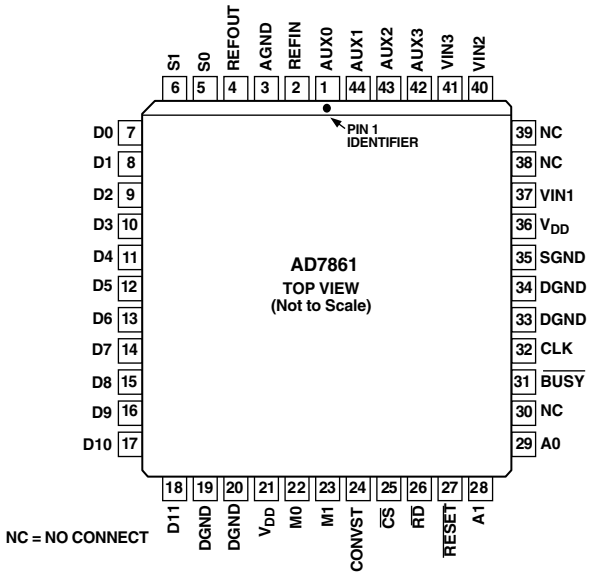

Pin Types	Pin Types
I/P = Input Pin	GND = Ground Pin
O/P = Output Pin	SUP = Supply Pin

ANALOG INPUT BLOCK

The AD7861 is an 11-bit resolution, successive approximation analog-to-digital (A/D) converter with twos complement output data format. The analog input range is 0 V–5 V with a 2.5 V reference as defined by the reference input pin (REFIN). The AD7861 has an internal 2.5 V ± 5% reference, which is utilized by connecting the reference output pin (REFOUT) to the REFIN pin.

The A/D conversion time is determined by the system clock frequency, which can range from 6.25 MHz to 12.5 MHz. Forty clock cycles are required to complete each conversion. There is a 4-channel simultaneous sample and hold amplifier (SHA) at the AD7861 input stage. This allows up to 4 channels to be simultaneously held and sequentially digitized. The SHA acquisition time is 20 clock cycles and is independent of the number of channels sampled.

The minimum throughput time can be calculated as follows:

$$t_{AA} = t_{SHA} + (n \times t_{CONV})$$

where t_{AA} = analog acquisition time, t_{SHA} = SHA acquisition time, n = # channels, t_{CONV} = conversion time per channel (40 clock cycles).

A/D conversions are initiated by an external analog sample clock pin (CONVST).

The CONVST input can be run asynchronous to the AD7861 system clock. When CONVST is run asynchronous from CLK, the falling edge of CLK subsequent to CONVST high initiates the conversion.

$\overline{\text{BUSY}}$

The AD7861 $\overline{\text{BUSY}}$ pin goes low at the start of conversion, and remains low for 40 clock cycles per channel. When $\overline{\text{BUSY}}$ goes high, this indicates that the output data buffers have been updated. Data from the previous conversion can be read up to (n × 40 – 1) clock cycles after the start of conversion (n = number of channels converted). Refer to Figure 3.

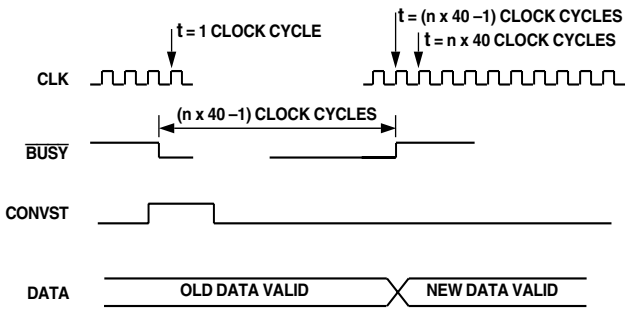

Figure 3. Busy Pulse Timing

CHANNEL SELECTION

Determining which channels are converted is dependent on the settings of M0 and M1. The available channel combinations are:

M1	M0	Channels Converted
0	0	VIN2, VIN3
0	1	VIN2, VIN3, AUX
1	0	VIN1, VIN2, VIN3
1	1	VIN1, VIN2, VIN3, AUX

The user must select which channels to convert using M0/M1, a minimum of two clock cycles before the start of conversion.

The AD7861 provides 4 auxiliary input channels which can be individually multiplexed into the auxiliary ADC channel. Pins S0/S1 are used to multiplex these auxiliary channels according to the following table. It is important to note that the ADC performs a series of conversions based on the input voltage on each pin (including the AUX pin) at the start of the CONVST conversion pulse. The user must select the auxiliary channel using S0/S1 a minimum of two clock cycles before the start of the conversion sequence.

S1	S0	Channel Selected
0	0	AUX0
0	1	AUX1
1	0	AUX2
1	1	AUX3

DIGITAL INTERFACE

The AD7861 is designed to interface with the ADSP-21xx family of DSPs. The 12-bit parallel interface can also be used with other DSPs and microcontrollers.

The 11-bit A/D conversion output occupies the 11 most significant bits of the 12-bit interface. The LSB (Data Bit 0) is tied low.

REGISTER BASED INPUT/OUTPUT

To facilitate integration into most designs, a register based input/output structure is provided. These registers can be memory mapped into the user's system along with other memory mapped peripherals.

REGISTER ADDRESSING

Two address lines (A0 through A1) are used in conjunction with control lines ($\overline{\text{CS}}$, $\overline{\text{RD}}$) to select registers VIN1, VIN2, VIN3, or AUX. These control lines are active low. Timing and logical sense is as for the ADSP-2100 family.

Pin	Function
$\overline{\text{CS}}$	Enables the AD7861 Register Interface
$\overline{\text{RD}}$	Places the Internal Register on the Data Bus

REGISTER LISTING

The output of each channel is stored in its respective register. The symbolic names and address locations are listed in the following table.

Name	A1	A0	Register Function
VIN1	0	0	A/D Conversion Result Channel VIN1
VIN2	0	1	A/D Conversion Result Channel VIN2
VIN3	1	0	A/D Conversion Result Channel VIN3
AUX	1	1	A/D Conversion Result Channel AUX

DESCRIPTION OF THE REGISTERS

VIN1, VIN2, VIN3 — These registers contain the results from the conversion of the analog input voltages.

AUX — In the AD7861, this register contains the conversion result of the auxiliary channel which had been selected by S0, S1.

Reading Results

The A/D conversion results for channels VIN1, VIN2, VIN3 and AUX are stored in the VIN1, VIN2, VIN3 and AUX registers respectively. The twos complement data is left justified and the LSB (Data Bit 0) is set to zero. The relationship between input voltage and output coding is shown in Figure 4.

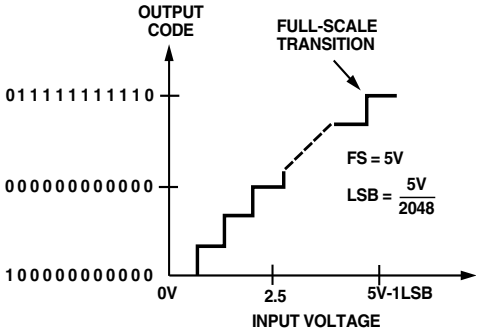

Figure 4. AD7861 Transfer Function

Power Supply Connections and Setup

The nominal power supply level (V_{DD}) is +5 V ± 5%. The positive power supply (V_{DD}) should be connected to Pins 21 and 36. The SGND and DGND pins should be star point connected to AGND at a point close to the AD7861.

Power supplies should be bypassed at the power pins using a 0.1 μF capacitor. A 200 nF capacitor should also be connected between REFIN and SGND.

DIGITAL SIGNAL PROCESSOR INTERFACING

The AD7861 A/D converter is designed to be easily interfaced to Analog Devices' family of Digital Signal Processors (DSPs). Figure 5 shows the interface between the AD7861 and the ADSP-2101/2105/2115 16-bit fixed point DSP, and the ADSP-2171 and ADSP-2181 DSP Microcomputers. FLAGOUT from the DSP is used to initiate the AD7861 conversion and is also used in conjunction with the BUSY signal to provide an end of conversion interrupt for the DSP. With M0 and M1 tied low, the AD7861 is set up in the VIN2, VIN3 channel conversion mode. By mapping the 12-bit AD7861 data bus into the top 12 bits of the DSP data bus (D12–D23), full-scale outputs from the AD7861 can be represented as ±1.0 in fixed point arithmetic.

The AD7861 can operate with a clock frequency in the range of 6.25 MHz to 12.5 MHz. For the ADSP-2101/2105/2115 the CLKOUT frequency is the system clock frequency. In the case of the ADSP-2171/2181, the system clock is internally scaled, a 10 MHz system clock will result in a 20 MHz CLKOUT frequency. If CLKOUT from the ADSP-2171/2181 is above 12.5 MHz, then an external clock divide down circuit will be necessary.

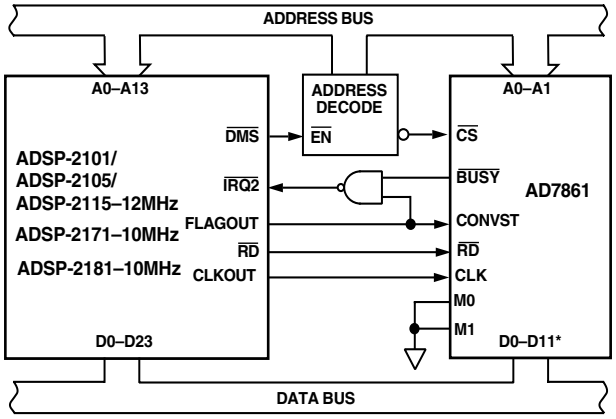

Figure 5. ADI Digital Signal Processor/Microcomputer Interface

OUTLINE DIMENSIONS

Dimensions shown in inches and (mm).

44-Lead Plastic Leadless Chip Carrier (P-44A)

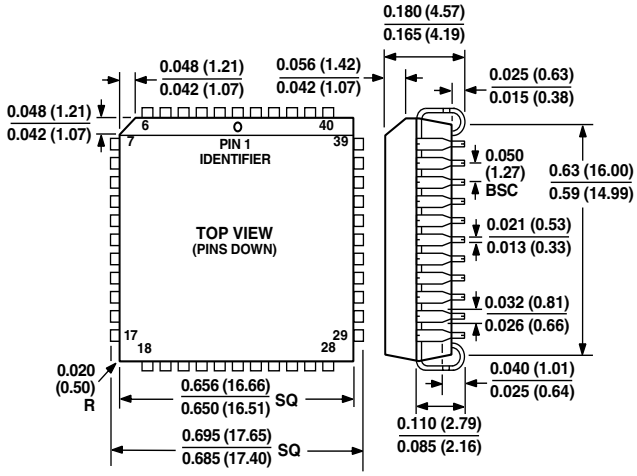

C2073a–1.5–3/00 (rev. B)

PRINTED IN U.S.A.