120 kHz Bandwidth, Low Distortion, Isolation Amplifier

AD215

FEATURES
Isolation Voltage Rating: 1,500 V rms
Wide Bandwidth: 120 kHz, Full Power (–3 dB)
Rapid Slew Rate: 6 V/μs
Fast Settling Time: 9 μs
Low Harmonic Distortion: –80 dB @ 1 kHz
Low Nonlinearity: ±0.005%
Wide Output Range: ±10 V, min (Buffered)
Built-in Isolated Power Supply: ±15 V dc @ ±10 mA
Performance Rated over –40°C to +85°C

APPLICATIONS INCLUDE
High Speed Data Acquisition Systems
Power Line and Transient Monitors
Multichannel Muxed Input Isolation
Waveform Recording Instrumentation
Power Supply Controls
Vibration Analysis

FUNCTIONAL BLOCK DIAGRAM

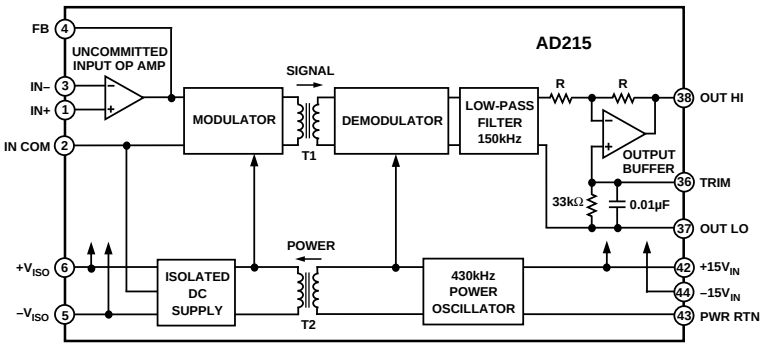

GENERAL DESCRIPTION

The AD215 is a high speed input isolation amplifier designed to isolate and amplify wide bandwidth analog signals. The innovative circuit and transformer design of the AD215 ensures wideband dynamic characteristics while preserving key dc performance specifications.

The AD215 provides complete galvanic isolation between the input and output of the device including the user-available front-end isolated power supplies. The functionally complete design, powered by a ±15 V dc supply, eliminates the need for a user supplied isolated dc/dc converter. This permits the designer to minimize circuit overhead and reduce overall system design complexity and component costs.

The design of the AD215 emphasizes maximum flexibility and ease of use in a broad range of applications where fast analog signals must be measured under high common-mode voltage (CMV) conditions. The AD215 has a ±10 V input/output range, a specified gain range of 1 V/V to 10 V/V, a buffered output with offset trim and a user-available isolated front-end power supply which produces ±15 V dc at ±10 mA.

PRODUCT HIGHLIGHTS

High Speed Dynamic Characteristics: The AD215 features a typical full-power bandwidth of 120 kHz (100 kHz min), rise time of 3 μs and settling time of 9 μs. The high speed performance of the AD215 allows for unsurpassed galvanic isolation of virtually any wideband dynamic signal.

Flexible Input and Buffered Output Stages: An uncommitted op amp is provided on the input stage of the AD215 to allow for input buffering or amplification and signal conditioning. The AD215 also features a buffered output stage to drive low impedance loads and an output voltage trim for zeroing the output offset where needed.

High Accuracy: The AD215 has a typical nonlinearity of ±0.005% (B grade) of full-scale range and the total harmonic distortion is typically –80 dB at 1 kHz. The AD215 provides designers with complete isolation of the desired signal without loss of signal integrity or quality.

Excellent Common-Mode Performance: The AD215BY (AD215AY) provides 1,500 V rms (750 V rms) common-mode voltage protection from its input to output. Both grades feature a low common-mode capacitance of 4.5 pF inclusive of the dc/dc power isolation. This results in a typical common-mode rejection specification of 105 dB and a low leakage current of 2.0 μA rms max (240 V rms, 60 Hz).

Isolated Power: An unregulated isolated power supply of ±15 V dc @ ±10 mA is available at the isolated input port of the AD215. This permits the use of ancillary isolated front-end amplifiers or signal conditioning components without the need for a separate dc/dc supply. Even the excitation of transducers can be accomplished in most applications.

Rated Performance over the –40°C to +85°C Temperature Range: With an extended industrial temperature range rating, the AD215 is an ideal isolation solution for use in many industrial environments.

REV. 0

Information furnished by Analog Devices is believed to be accurate and reliable. However, no responsibility is assumed by Analog Devices for its use, nor for any infringements of patents or other rights of third parties which may result from its use. No license is granted by implication or otherwise under any patent or patent rights of Analog Devices.

© Analog Devices, Inc., 1996

One Technology Way, P.O. Box 9106, Norwood, MA 02062-9106, U.S.A.
Tel: 617/329-4700 **Fax: 617/326-8703**

AD215—SPECIFICATIONS (Typical @ +25°C, V_S = ±15 V dc, 2 kΩ output load, unless otherwise noted.)

Parameter	Conditions	AD215AY/BY Min	Typ	Max	Units
GAIN					
Range[1]		1		10	V/V
Error	G = 1 V/V, No Load on V_{ISO}		±0.5	±2	%
vs. Temperature	0°C to +85°C		+15		ppm/°C
	–40°C to 0°C		+50		ppm/°C
vs. Supply Voltage	±(14.5 V dc to 16.5 V dc)		+100		ppm/V
vs. Isolated Supply Load[2]			+20		ppm/mA
Nonlinearity[3]					
AD215BY Grade	±10 V Output Swing, G = 1 V/V		±0.005	±0.015	%
	±10 V Output Swing, G = 10 V/V		±0.01		%
AD215AY Grade	±10 V Output Swing, G = 1 V/V		±0.01	± 0.025	%
	±10 V Output Swing, G = 10 V/V		±0.025		%
INPUT VOLTAGE RATINGS					
Input Voltage Rating	G = 1 V/V	±10			V
Maximum Safe Differential Range	IN+ or IN–, to IN COM		±15		V
CMRR of Input Op Amp			100		dB
Isolation Voltage Rating[4]	Input to Output, AC, 60 Hz				
AD215BY Grade	100% Tested[4]	1500			V rms
AD215AY Grade	100% Tested[4]	750			V rms
IMRR (Isolation Mode Rejection Ratio)	R_S ≤ 100 Ω (IN+ & IN–), G = 1 V/V, 60 Hz		120		dB
	R_S ≤ 100 Ω (IN+ & IN–), G = 1 V/V, 1 kHz		100		dB
	R_S ≤ 100 Ω (IN+ & IN–), G = 1 V/V, 10 kHz		80		dB
	R_S ≤ 1 kΩ (IN+ & IN–), G = 1 V/V, 60 Hz		105		dB
	R_S ≤ 1 kΩ (IN+ & IN–), G = 1 V/V, 1 kHz		85		dB
	R_S ≤ 1 kΩ (IN+ & IN–), G = 1 V/V, 10 kHz		65		dB
Leakage Current, Input to Output	240 V rms, 60 Hz			2	µA rms
INPUT IMPEDANCE					
Differential	G = 1 V/V		16		MΩ
Common Mode			2‖4.5		GΩ‖pF
INPUT OFFSET VOLTAGE					
Initial	@ +25°C		±0.4	±2.0	mV
vs. Temperature	0°C to +85°C		±2		µV/°C
	–40°C to 0°C		±20		µV/°C
OUTPUT OFFSET VOLTAGE					
Initial	@ +25°C, Trimmable to Zero	0	–35	–80	mV
vs. Temperature	0°C to +85°C		±30		µV/°C
	–40°C to 0°C		±80		µV/°C
vs. Supply Voltage			±350		µV/V
vs. Isolated Supply Load[2]			–35		µV/mA
INPUT BIAS CURRENT					
Initial	@ +25°C		300		nA
vs. Temperature	–40°C to +85°C		±400		nA
INPUT DIFFERENCE CURRENT					
Initial	@ +25°C		±3		nA
vs. Temperature	–40°C to +85°C		±40		nA
INPUT VOLTAGE NOISE					
Input Voltage Noise	Frequency > 10 Hz		20		nV/√Hz
DYNAMIC RESPONSE (2 kΩ Load)					
Full Signal Bandwidth (–3 dB)	G = 1 V/V, 20 V pk-pk Signal	100	120		kHz
Transport Delay[6]			2.2		µs
Slew Rate	±10 V Output Swing		6		V/µs
Rise Time	10% to 90%, ±10 V Output Swing		3		µs

Parameter	Conditions	AD215AY/BY Min	Typ	Max	Units
DYNAMIC RESPONSE (2 kΩ Load) Cont.					
Settling Time	to ±0.10%, ±10 V Output Swing		9		µs
Overshoot			1		%
Harmonic Distortion Components	@ 1 kHz		–80		dB
	@ 10 kHz		–65		dB
Overload Recovery Time	G = 1 V/V, ±15 V Drive		5		µs
Output Overload Recovery Time	G > 5		10		µs
RATED OUTPUT					
Voltage	Out HI to Out LO	±10			V
Current	2 kΩ Load	±5			mA
Max Capacitive Load			500		pF
Output Resistance			1		Ω
Output Ripple and Noise[7]	1 MHz Bandwidth		10		mV pk-pk
	50 kHz Bandwidth		2.5		mV pk-pk
ISOLATED POWER OUTPUT[8]					
Voltage	No Load	±14.25	±15	±17.25	V
vs. Temperature	0°C to +85°C		+20		mV/°C
	–40°C to 0°C		+25		mV/°C
Current at Rated Supply Voltage[2, 9]			±10		mA
Regulation	No Load to Full Load		–90		mV/V
Line Regulation			290		mV/V
Ripple	1 MHz Bandwidth, No Load[2]		50		mV rms
POWER SUPPLY					
Supply Voltage	Rated Performance	±14.5	±15	±16.5	V dc
	Operating[10]	±14.25		±17	V dc
Current	Operating (+15 V dc/–15 V dc Supplies)		+40/–18		mA
TEMPERATURE RANGE					
Rated Performance		–40		+85	°C
Storage		–40		+85	°C

NOTES

[1]The gain range of the AD215 is specified from 1 to 10 V/V. The AD215 can also be used with gains of up to 100 V/V. With a gain of 100 V/V a 20% reduction in the –3 dB bandwidth specification occurs and the nonlinearity degrades to ±0.02% typical.

[2]When the isolated supply load exceeds ±1 mA, external filter capacitors are required in order to ensure that the gain, offset, and nonlinearity specifications are preserved and to maintain the isolated supply full load ripple below the specified 50 mV rms. A value of 6.8 µF is recommended.

[3]Nonlinearity is specified as a percent (of full-scale range) deviation from a best straight line.

[4]The isolation barrier (and rating) of every AD215 is 100% tested in production using a 5 second partial discharge test with a failure detection threshold of 150 pC. All "B" grade devices are tested with a minimum voltage of 1,800 V rms. All "A" grade devices are tested with a minimum voltage of 850 V rms.

[5]The AD215 should be allowed to warm up for approximately 10 minutes before any gain and/or offset adjustments are made.

[6]Equivalent to a 0.8 degrees phase shift.

[7]With the ±15 V dc power supply pins bypassed by 2.2 µF capacitors at the AD215 pins.

[8]Caution: The AD215 design does not provide short circuit protection of its isolated power supply. A current limiting resistor may be placed in series with the isolated power terminals and the load in order to protect the supply against inadvertent shorts.

[9]With an input power supply voltage greater than or equal ±15 V dc, the AD215 may supply up to ±15 mA from the isolated power supplies.

[10]Voltages less than 14.25 V dc may cause the AD215 to cease operating properly. Voltages greater than ±17.5 V dc may damage the internal components of the AD215 and consequently should not be used.

Specifications subject to change without notice.

CAUTION

ESD (electrostatic discharge) sensitive device. Electrostatic charges as high as 4000 V readily accumulate on the human body and test equipment and can discharge without detection. Although the AD215 features proprietary ESD protection circuitry, permanent damage may occur on devices subjected to high energy electrostatic discharges. Therefore, proper ESD precautions are recommended to avoid performance degradation or loss of functionality.



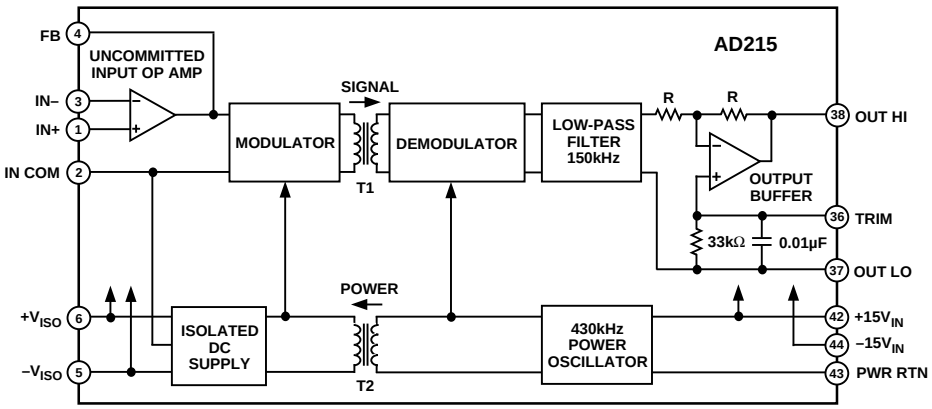

Figure 1. Functional Block Diagram

PIN CONFIGURATIONS



AD215 PIN DESIGNATIONS

Pin	Designation	Function
1	IN+	Noninverting Input
2	IN COM	Input Common
3	IN–	Inverting Input
4	FB	Amplifier Feedback
5	$-V_{ISO}$ OUT	Isolated –15 V dc Power Supply
6	$+V_{ISO}$ OUT	Isolated +15 V dc Power Supply
36	TRIM	Output Offset Trim Adjust
37	OUT LO	Output Low
38	OUT HI	Output High
42	+15 V_{IN}	+15 V dc Power
43	PWR RTN	±15 V dc Power Supply Common
44	–15 V_{IN}	–15 V dc Power

ORDERING GUIDE

Model	Temperature Range	V_{CMV}	Nonlinearity*
AD215AY	–40°C to +85°C	750	0.01%
AD215BY	–40°C to +85°C	1500	0.005%

*Typical @ +25°C, G = 1 V/V.

INSIDE THE AD215

The AD215 is a fully self-contained analog signal and power isolation solution. It employs a double-balanced amplitude modulation technique to perform transformer coupling of signals ranging in frequency from true dc values to those having frequencies of 120 kHz or less.

To generate the power supplies used for the isolated front-end circuitry, an internal clock oscillator drives the primary winding of the integral dc/dc power supply's transformer, T2. The resultant voltage developed across the secondary winding is then rectified and filtered for use as the isolated power supply.

This built-in isolated dc/dc converter provides sufficient power for both the internal isolated circuit elements of the AD215 as well as any ancillary components supplied by the user. It saves onboard space and component cost where additional amplification or signal conditioning is required.

After an input signal is amplified by the uncommitted op amp, it is modulated at a carrier frequency of approximately 430 kHz and applied across the primary winding of the signal isolation transformer T1.

The resultant signal induced on the secondary winding of the transformer is then demodulated and filtered using a low-pass Bessel response filter set at a frequency of 150 kHz. The function of the filter reconstructs the original signal as it appears on the input.

The signal transformer design and construction allow nonlinearity to be independent of both the specified temperature and gain ranges.

After complete reconstruction, the signal is subjected to an offset trim stage and final output buffer. The trim circuit allows the designer flexibility to adjust for any offset as desired.

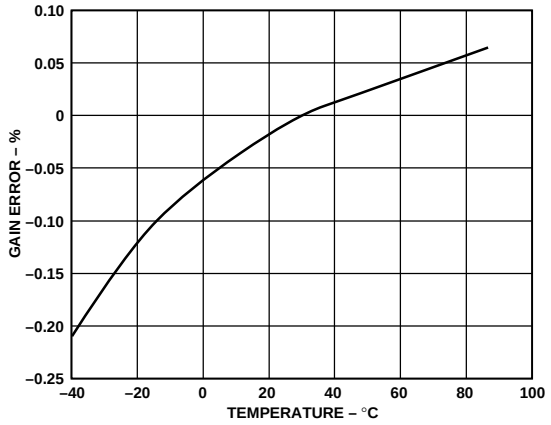

Figure 2. Gain Error vs. Temperature

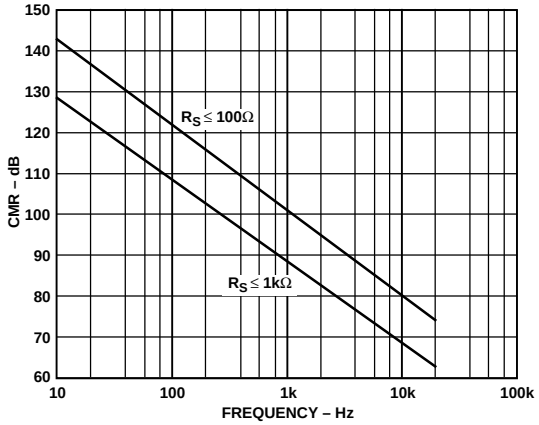

Figure 4. Typical Common-Mode Rejection vs. Frequency

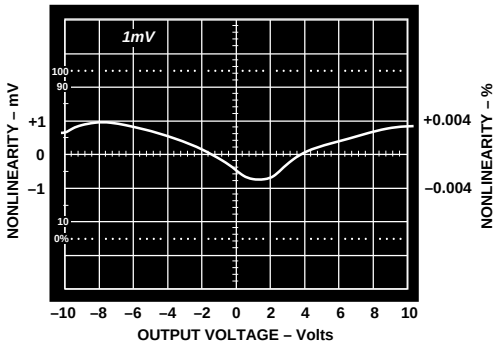

Figure 3. Gain Nonlinearity vs. Output Voltage (G = 1 V/V)

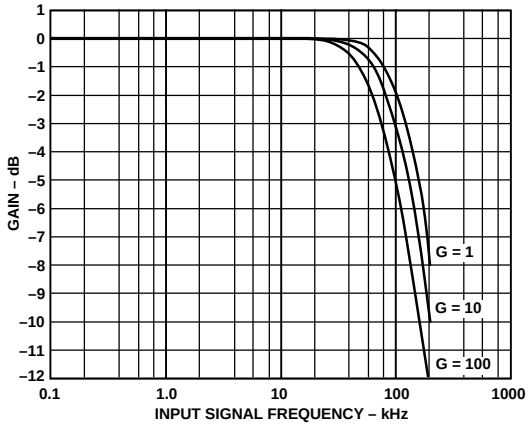

Figure 5. Normalized Gain as a Function of Signal Frequency

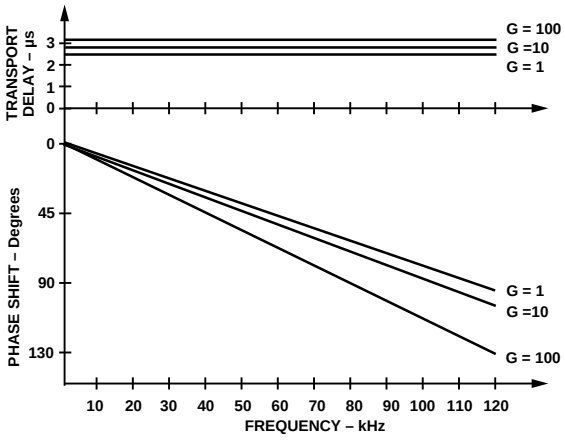

Figure 6. Phase Shift and Transport Delay vs. Frequency

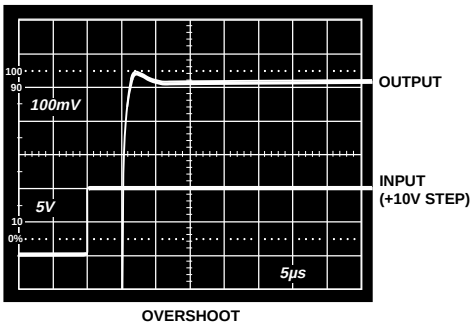

Figure 7a. Overshoot to a Full-Scale Step Input (G = 1 V/V)

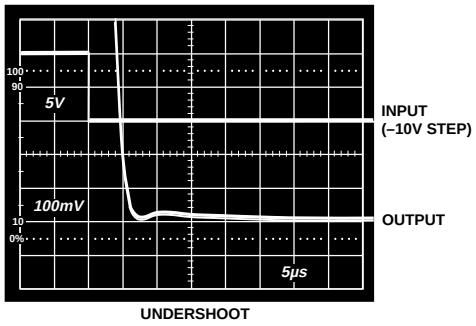

Figure 7b. Undershoot to a Full-Scale Input (G = 1 V/V)

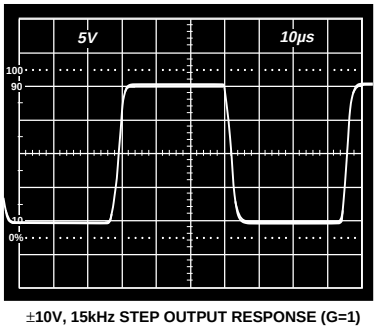

Figure 8. Output Response to Full-Scale Step Input (G = 1 V/V)

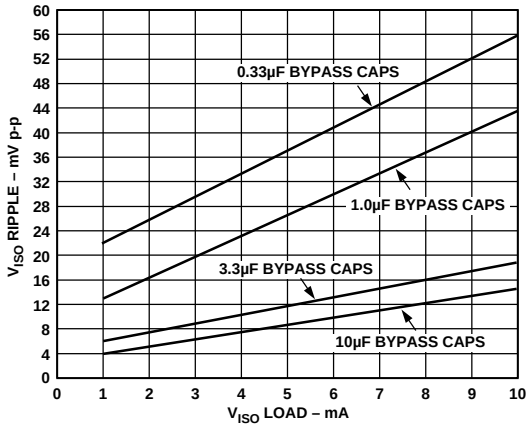

Figure 9. $\pm V_{ISO}$ Supply Ripple vs. Load

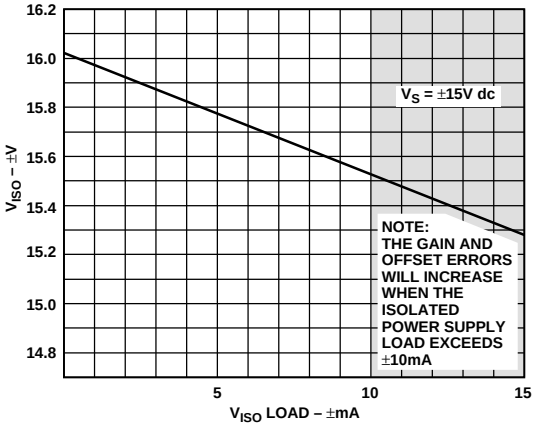

Figure 10. $\pm V_{ISO}$ Supply Voltage vs. Load

POWERING THE AD215

The AD215 is powered by a bipolar ±15 V dc power supply connected as shown in Figure 11. External bypass capacitors should be provided in bused applications. Note that a small signal-related current (50 mA/V_{OUT}) will flow out of the OUT LO pin (Pin 37). Therefore, the OUT LO terminals should be bused together and referenced at a single "Analog Star Ground" to the ±15 V dc supply common as illustrated Figure 11.

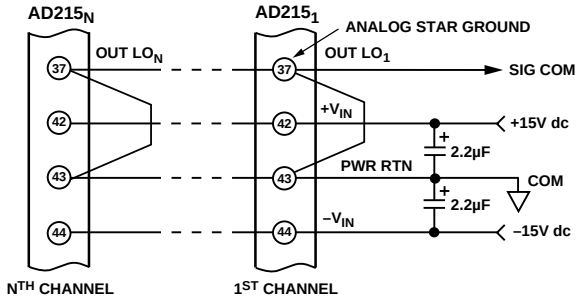

Figure 11. Typical Power Supply Connections

Power Supply Voltage Considerations

The rated performance of the AD215 remains unaffected for power supply voltages in the ±14.5 V dc to ±16.5 V dc range. Voltages below ±14.25 V dc may cause the AD215 to cease operating properly.

Note: Power supply voltages greater than ±17.5 V dc may damage the internal components and consequently should not be used.

USING THE AD215

Unity Gain Input Configuration

The basic unity gain configuration for input signals of up to ±10 V is shown in Figure 12.

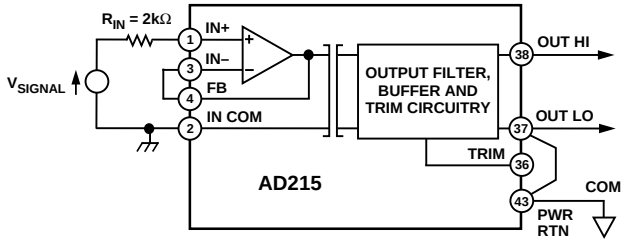

Figure 12. Basic Unity Gain

Noninverting Configuration for Gain Greater Than Unity

Figure 13 shows how to achieve a gain greater than one while continuing to preserve a very high input impedance. A recommended PC board layout for multichannel applications is shown in Figure 20b.

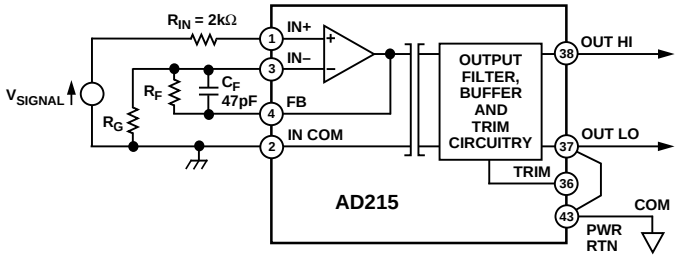

Figure 13. Noninverting Input Configuration for Gain > 1 V/V

In this circuit, the gain equation is as follows:

$$V_O = (1 + R_F/R_G) \times V_{SIG}$$

where:

V_O = Output Voltage (V)
V_{SIG} = Input Signal Voltage (V)
R_F = Feedback Resistor Value (Ω)
R_G = Gain Resistor Value (Ω)

The values for resistors R_F and R_G are subject to the following constraints:

- The total impedance of the gain network should be less than 10 kΩ.
- The current drawn in R_F is less than 1 mA at ±10 V. Note that for each mA drawn by the feedback resistor, the isolated power supply drive capability decreases by 1 mA.
- Amplifier gain is set by the feedback (R_F) and gain resistor (R_G).

It is recommended that R_F is bypassed with a 47 pF capacitor as shown.

Note: The 2 kΩ input resistor (R_{IN}) in series with the input signal source and the IN+ terminal in Figures 12 and 13 is recommended to limit the current at the input terminals of the to 5.0 mA when the AD215 is not powered.

Compensating the Uncommitted Input Op Amp

The open-loop gain and phase versus frequency for the uncommitted input op amp are given in Figure 14. These curves can be used to determine appropriate values for the feedback resistor (R_F) and compensation capacitor (C_F) to ensure frequency stability when reactive or nonlinear components are used.

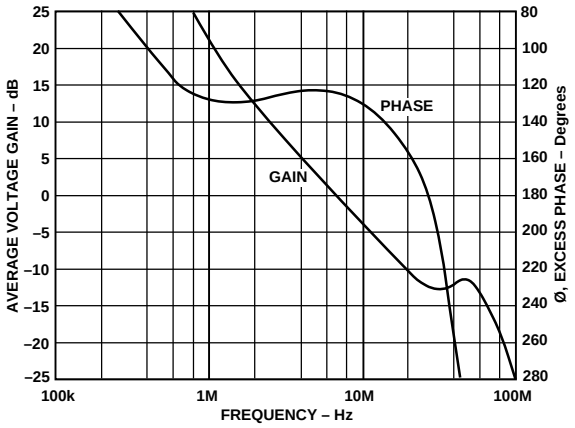

Figure 14. Open-Loop Gain and Frequency Response

Inverting, Summing or Current Input Configuration

Figure 14 shows how the AD215 can measure currents or sum currents or voltages.

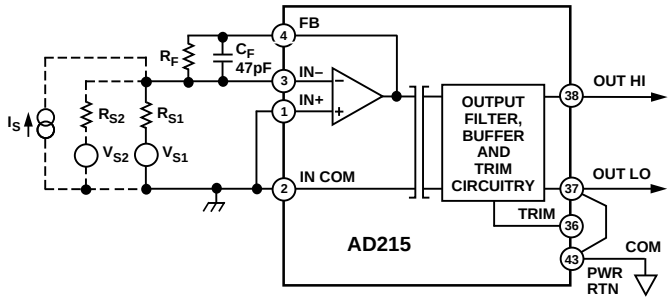

Figure 15. Noninverting Summing/Current Configuration

For this circuit, the output voltage equation is:

$$V_O = -R_F \times (I_S + V_{S1}/R_{S1} + V_{S2}/R_{S2} + \ldots)$$

where:

V = Output Voltage (V)
V_{S1} = Input Voltage Signal 1 (V)
V_{S2} = Input Voltage Signal 2 (V)
I_S = Input Current Source (A)
R_F = Feedback Resistor (Ω) (10 kΩ, typ)
R_{S1} = Input Signal 1 Source Resistance (Ω)
R_{S2} = Input Signal 2 Source Resistance (Ω)

The circuit of Figure 15 can also be used when the input signal is larger than the ±10 V input range of the isolator. For example, in Figure 15, if only V_{S1}, R_{S1} and R_F were connected as shown with the solid lines, the input voltage span of V_{S1} could accommodate up to ±50 V when R_F = 10 kΩ and R_{S1} = 50 kΩ.

GAIN AND OFFSET ADJUSTMENTS

General Comments

The AD215 features an output stage TRIM pin useful for zeroing the output offset voltage through use of user supplied circuitry.

When gain and offset adjustments are required, the actual compensation circuit ultimately used depends on the following:

- The input configuration mode of the isolation amplifier (noninverting or inverting).
- The placement of any adjusting potentiometer (on the isolator's input or output side).

As a general rule:

- Gain adjustments should be accomplished at the gain-setting resistor network at the isolator's input.
- To ensure stability in the gain adjustment, potentiometers should be located as close as possible to the isolator's input and its impedance should be kept low. Adjustment ranges should also be kept to a minimum since their resolution and stability is dependent upon the actual potentiometers used.
- Output adjustments may be necessary where adjusting potentiometers placed near the input would present a hazard to the user due to the presence of high common-mode voltages during the adjustment procedure.
- It is recommended that input offset adjustments are made prior to gain adjustments.
- The AD215 should be allowed to warm up for approximately 10 minutes before gain or offset adjustments are made.

Input Gain Adjustments for Noninverting Mode

Figure 16 shows a suggested noninverting gain adjustment circuit. Note that the gain adjustment potentiometer R_P is incorporated into the gain-setting resistor network.

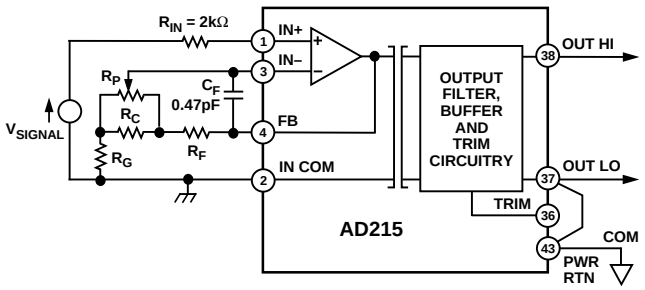

Figure 16. Gain Adjustment for Noninverting Configuration

For a ±1% trim range:

$$(R_P \approx 1k\Omega),\ R_C \approx 0.02 \times \frac{R_G \times R_F}{R_G + R_F}$$

Input Gain Adjustments for the Inverting Mode

Figure 17 shows a suggested inverting gain adjustment circuit. In this circuit, gain adjustment is made using a potentiometer (R_P) in the feedback loop. The adjustments are effective for all gains in the 1 to 10 V/V range.

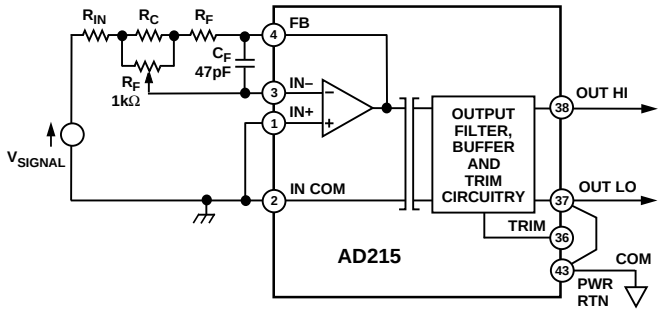

Figure 17. Gain Adjustment for Inverting Configuration

For an approximate ±1% gain trim range,

$$R_X = \frac{R_{IN} \times R_F}{R_{IN} + R_F}$$

and select

$$R_C = 0.02 \times R_{IN}$$

while

$$R_F < 10\ k\Omega$$
$$C_F = 47\ pF$$

Note: R_F and R_{IN} should have matched temperature coefficient drift characteristics.

Output Offset Adjustments

Figure 18 illustrates one method of adjusting the output offset voltage. Since the AD215 exhibits a nominal output offset of –35 mV, the circuit shown was chosen to yield an offset correction of 0 mV to +73 mV. This results in a total output offset range of approximately –35 mV to +38 mV.

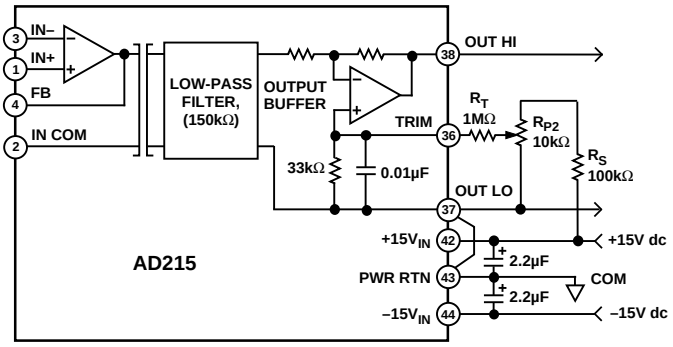

Figure 18. Output Offset Adjustment Circuit

Output Gain Adjustments

Since the output amplifier stage of the AD215 is fixed at unity gain, any adjustments can be made only in a subsequent stage.

USING ISOLATED POWER

Each AD215 provides an unregulated, isolated bipolar power source of ±15 V dc @ ±10 mA, referred to the input common. This source may be used to power various ancillary components such as signal conditioning and/or adjustment circuitry, references, op amps or remote transducers. Figure 19 shows typical connections.

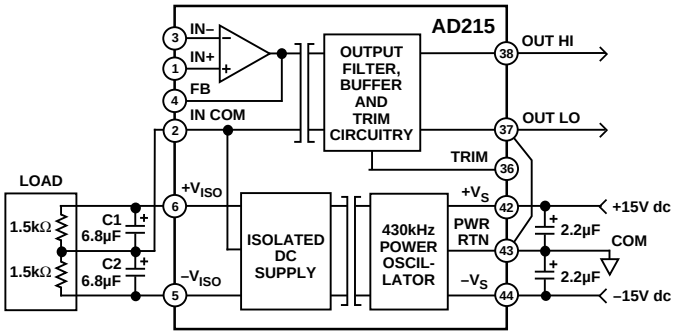

Figure 19. Using the Isolated Power Supplies

PCB LAYOUT FOR MULTICHANNEL APPLICATIONS

The pin out of the AD215 has been designed to easily facilitate multichannel applications. Figure 20a shows a recommended circuit board layout for a unity gain configuration.

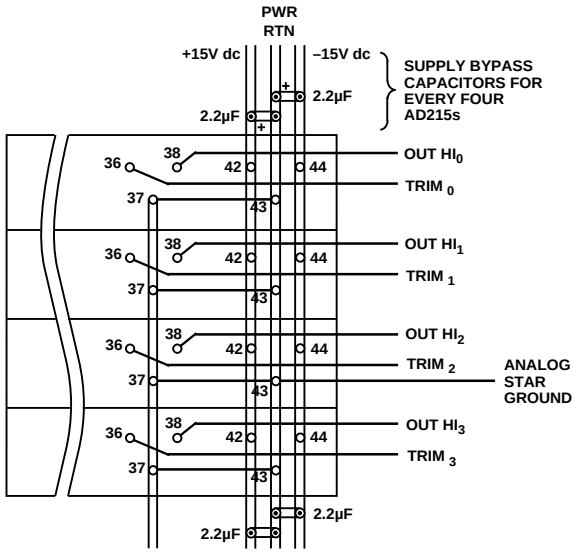

Figure 20a. PCB Layout for Unity Gain

CAUTION

The AD215 design does not provide short-circuit protection of its isolated power supply. A current limiting resistor should be placed in series with the supply terminals and the load in order to protect against inadvertent shorts.

When gain setting resistors are used, 0.325" channel centers can still be achieved as shown in Figure 20b.

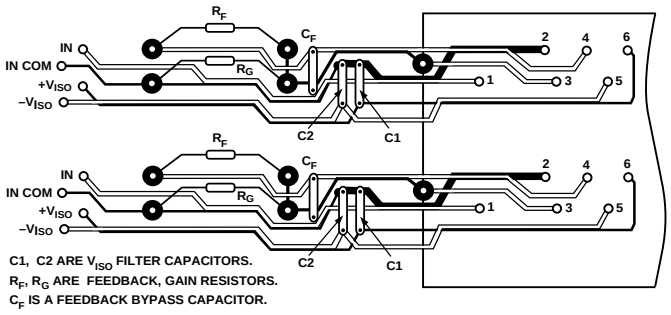

Figure 20b. PCB Layout for Gain Greater than Unity

APPLICATIONS EXAMPLES

Motor Control

Figure 21 shows an AD215 used in a dc motor control application. Its excellent phase characteristics and wide bandwidth are ideal for this type of application.

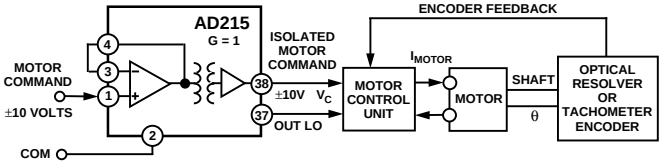

Figure 21. Motor Control Application

Multichannel Data Acquisition

The current drive capabilities of the AD215's bipolar ±15 V dc isolated power supply is more than adequate to meet the modest ±800 µA supply current requirements for the AD7502 multiplexer. Digital isolation techniques should be employed to isolate the Enable (EN), A0 and A1 logic control signals.

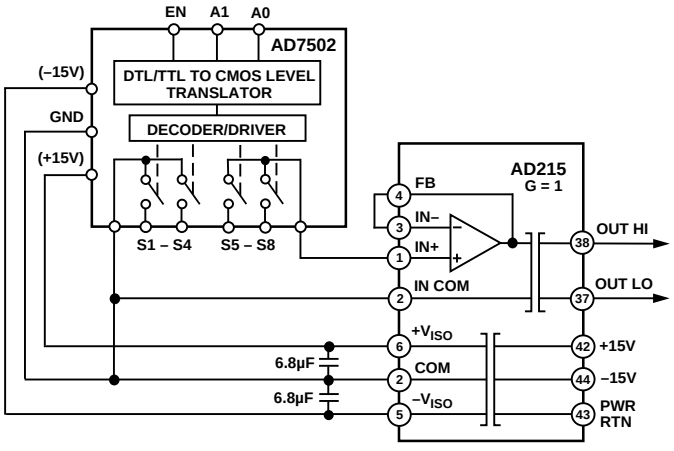

Figure 22. Multichannel Data Acquisition Application

AC Transducer Applications

In applications such as vibration analysis, where the user must acquire and process the spectral content of a sensor's signal rather than its "dc" level, the wideband characteristics of the AD215 prove most useful. Key specifications for ac transducer applications include bandwidth, slew rate and harmonic distortion. Since the transducer may be mechanically bonded or welded to the object under test, isolation is typically required to eliminate ground loops as well as protect the electronics used in the data acquisition system. Figure 23 shows an isolated strain gage circuit employing the AD215 and a high speed operational amplifier (AD744).

To alleviate the need for an instrumentation amplifier, the bridge is powered by a bipolar excitation source. Under this approach the common-mode voltage is $\pm V_{SPAN}$ which is typically only a few millivolts, rather than the $V_{EXC} \div 2$ that would be achieved with a unipolar excitation source and Wheatstone bridge configuration.

Using two strain gages with a gage factor of 3 mV/V and a ±1.2 V excitation signal, a ±6.6 mV output signal will result. A gain setting of 454 will scale this low level signal to ±3 V, which can then be digitized by a high speed, 100 kHz sampling ADC such as the AD7870.

The low voltage excitation is used to permit the front-end circuitry to be powered from the isolated power supplies of the AD215, which can supply up to ±10 mA of isolated power at ±15 V. The bridge draws only 3.5 mA, leaving sufficient current to power the micropower dual BiFET (400 µA quiescent current) and the high speed AD744 BiFET amplifier (4 mA quiescent current).

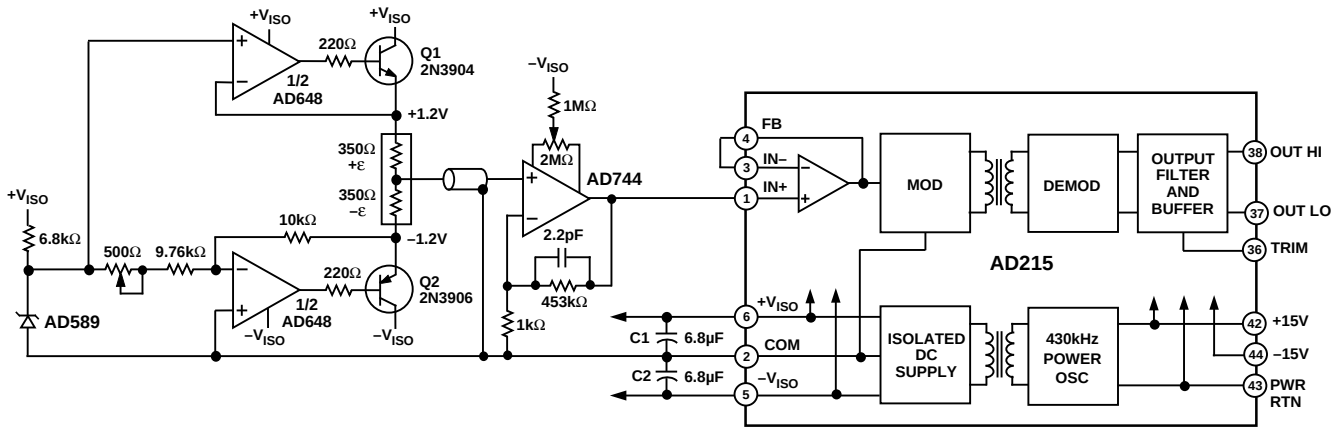

Figure 23. Strain Gage Signal Conditioning Application

OUTLINE DIMENSIONS

Dimensions shown in inches and (mm).

AD215 SIP PACKAGE

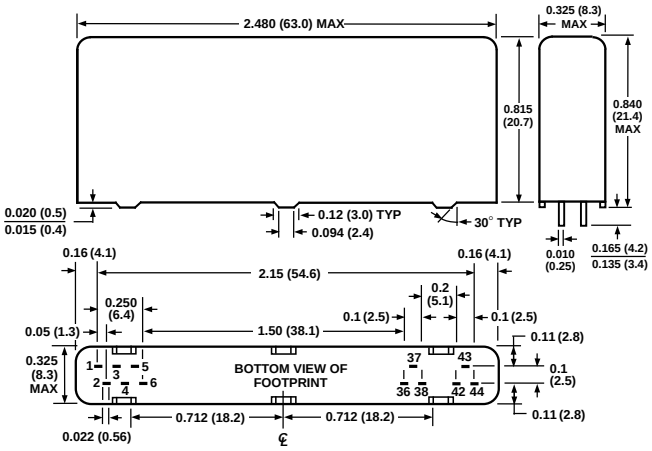

NOTE: PINS MEASURE 0.022 (0.56) x 0.010 (0.25) PRIOR TO TINNING.
TINNING MAY ADD UP TO 3 mils (0.003") TO THESE DIMENSIONS.

C2134–20–4/96

PRINTED IN U.S.A.