Tel : +44 118 979 1238
Fax : +44 118 979 1283
Email: info@actcrystals.com

The **ACTR9005/915.0/QCC4A** is a true one-port, surface-acoustic-wave (**SAW**) resonator in a surface-mount ceramic **QCC4A** case**.** It provides reliable, fundamental-mode, quartz frequency stabilization i.e. in transmitters or local oscillators operating at **915.000** MHz.

1.Package Dimension (QCC4A)

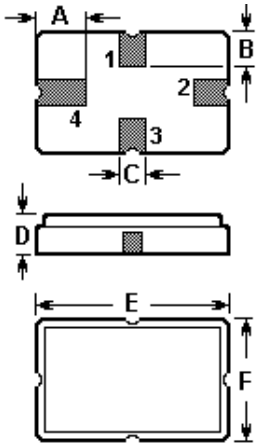

2.

Pin	Configuration
1	Input / Output
3	Output / Input
2/4	Case Ground

Sign	Data (unit: mm)	Sign	Data (unit: mm)
A	1.2	D	1.4
B	0.8	E	5.0
C	0.5	F	3.5

3.Equivalent LC Model and Test Circuit

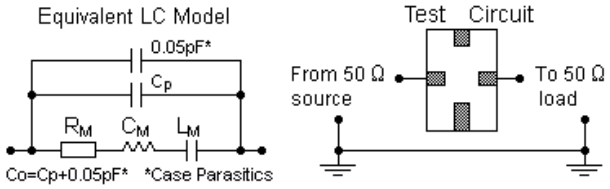

4.Typical Application Circuits

1) Low-Power Transmitter Application

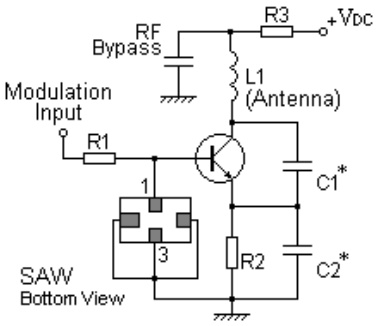

2) Local Oscillator Application

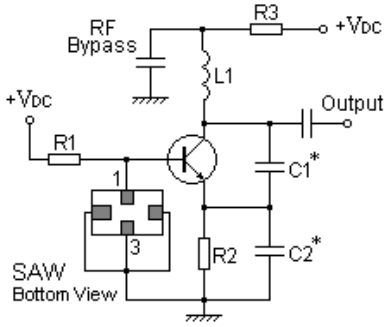

In keeping with our ongoing policy of product evolvement and improvement, the above specification is subject to change without notice.

ISO9001: 2000 Registered

For quotations or further information please contact us at:

3 The Business Centre, Molly Millars Lane, Wokingham, Berks, RG41 2EY, UK

http://www.actcrystals.com

Issue : 1.1 C1
Date : March 2010

Tel : +44 118 979 1238
Fax : +44 118 979 1283
Email: info@actcrystals.com

5.Typical Frequency Response

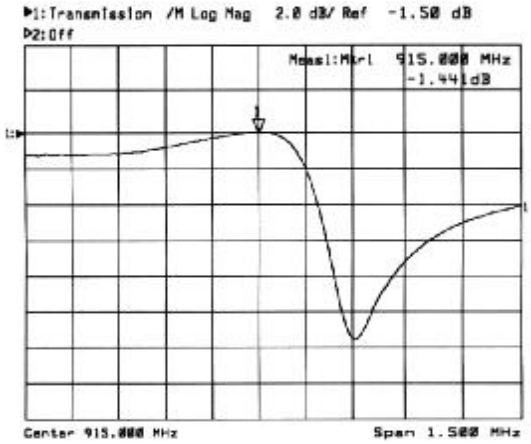

6.Temperature Characteristics

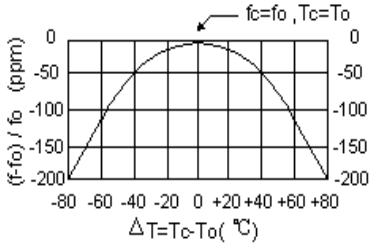

The curve shown above accounts for resonator contribution only and does not include oscillator temperature characteristics.

7.Performance

7-1.Maximum Ratings

Rating	Value	Units
CW RF Power Dissipation	0	dBm
DC Voltage Between Terminals	±30V	VDC
Case Temperature	-40 to +85	°C
Soldering Temperature	+250	°C

7-2.Electronic Characteristics

Characteristic		Sym	Minimum	Typical	Maximum	Units
Centre Frequency (+25 °C)	Absolute Frequency	f_C	914.850		915.150	MHz
	Tolerance from 915.000 MHz	Δf_C		±150		kHz
Insertion Loss		I_L		1.6	2.2	dB
Quality Factor	Unloaded Q	Q_U		9,000		
	50 Ω Loaded Q	Q_L		1,500		
Temperature Stability	Turnover Temperature	T_0	25		55	°C
	Turnover Frequency	f_0		f_C		kHz
	Frequency Temperature Coefficient	FTC		0.032		ppm/°C ^{2}
Frequency Aging	Absolute Value during the First Year	|fA|		≤10		ppm/yr
DC Insulation Resistance Between Any Two Terminals			1.0			MΩ
RF Equivalent RLC Model	Motional Resistance	R_M		20	29	Ω
	Motional Inductance	L_M		31.3250		µH
	Motional Capacitance	C_M		0.9668		fF
	Shunt Static Capacitance	C_0	1.7	2.0	2.3	pF

i CAUTION: Electrostatic Sensitive Device. Observe precautions for handling!

In keeping with our ongoing policy of product evolvement and improvement, the above specification is subject to change without notice.

ISO9001: 2000 Registered

For quotations or further information please contact us at:

3 The Business Centre, Molly Millars Lane, Wokingham, Berks, RG41 2EY, UK

http://www.actcrystals.com

Issue : 1.1 C1

Date : March 2010

Advanced crystal technology

Tel : +44 118 979 1238
Fax : +44 118 979 1283
Email: info@actcrystals.com

1. The centre frequency, f_C, is measured at the minimum IL point with the resonator in the 50 Ω test system.
2. Unless noted otherwise, case temperature T_C = +25°C±2°C.
3. Frequency aging is the change in f_C with time and is specified at +65°C or less. Aging may exceed the specification for prolonged temperatures above +65°C. Typically, aging is greatest the first year after manufacture, decreasing in subsequent years.
4. Turnover temperature, T_0, is the temperature of maximum (or turnover) frequency, f_0. The nominal frequency at any case temperature, T_C, may be calculated from: $f = f_0 [1 - FTC (T_0 - T_C)^2]$.
5. This equivalent RLC model approximates resonator performance near the resonant frequency and is provided for reference only. The capacitance C_0 is the measured static (non-motional) capacitance between the two terminals. The measurement includes case parasitic capacitance.
6. Derived mathematically from one or more of the following directly measured parameters: f_C, IL, 3 dB bandwidth, f_C versus T_C, and C_0.
7. The specifications of this device are based on the test circuit shown above and subject to change or obsolescence without notice.
8. Typically, equipment utilizing this device requires emissions testing and government approval, which is the responsibility of the equipment manufacturer.
9. Our liability is only assumed for the Surface Acoustic Wave (SAW) component(s) per se, not for applications, processes and circuits implemented within components or assemblies.