CURRENT SENSING TRANSFORMER

ACST-11, ACST-112

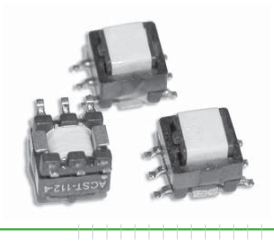

FEATURES:
- Precise Current Sensing

OPTIONS:
- T&R is standard
- Custom design available

APPLICATIONS:
- SMPS
- Current Sensing

STANDARD SPECIFICATIONS (Secondary Winding):

Part No	Lp mH ±25%	DCR Ω ±20%	N1 Turns
ACST-11-20	0.30	1.40	20
ACST-11-30	0.66	2.10	30
ACST-11-40	1.20	2.80	40
ACST-11-50	2.00	3.50	50
ACST-11-60	3.00	4.20	60
ACST-11-70	3.90	4.90	70
ACST-11-100	7.50	7.00	100
ACST-11-125	12.0	8.75	125
ACST-11-200	29.0	14.0	200

- Testing Condition: 10KHz 0.25VRMS (2-4)
- Polarity: 2 and 11 are in phase
- Turns Ratio Tolerance : ± 2%
- Hipot: 500 VRMS (2-4 to 11-12)

PHYSICAL CHARACTERISTICS:

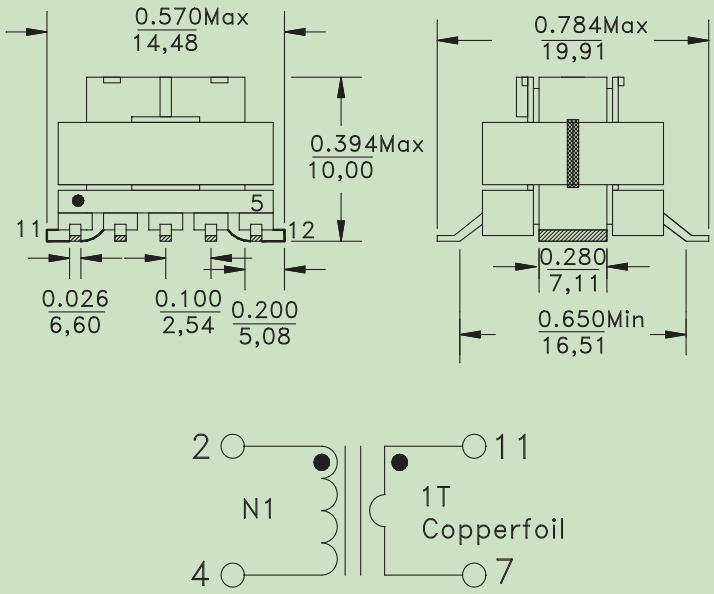

Part No	Lp mH Min	DCR Ω Max	N1 Turns
ACST-112-1	3.2	10	70
ACST-112-2	0.6	5	30
ACST-112-3	0.7	7	40
ACST-112-4	6.0	15	100

- Testing Condition: 1KHz 0.25VRMS (6-4)
- Polarity: 6 and 8 are in phase
- Turns Ratio Tolerance : ± 2%
- Hipot: 100 VRMS (6-4 to 8-7)

PHYSICAL CHARACTERISTICS:

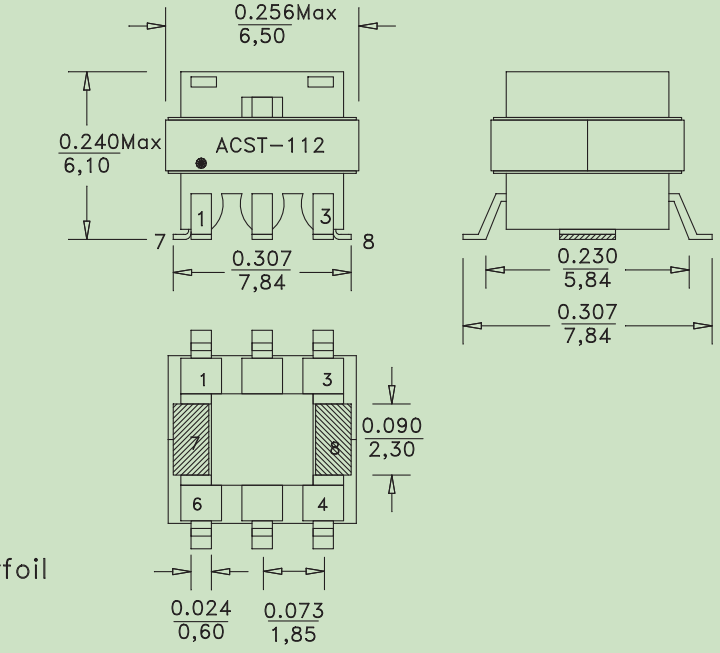

ABRACON CORPORATION

30332 Esperanza, Rancho Santa Margarita, California 92688
tel 949-546-8000 | fax 949-546-8001 | www.abracon.com