Data Sheet | July 1999 | File Number 4761

Radiation Hardened 10-to-4 Line Priority Encoder

These nine-input priority encoders accept data from nine active LOW inputs and provide a binary representation on the four active LOW outputs. A priority is assigned to each input so that when two or more inputs are simultaneously active, the input with the highest priority is represented on the output. Input line I9 has the highest priority.

These devices provide the 10-to-4-line priority encoding function by use of the implied decimal “zero”. The “zero” is encoded when all nine data inputs are HIGH, forcing all four outputs HIGH.

The ACS147MS is fabricated on a CMOS Silicon on Sapphire (SOS) process, which provides an immunity to Single Event Latch-up and the capability of highly reliable performance in any radiation environment.

Specifications for Rad Hard QML devices are controlled by the Defense Supply Center in Columbus (DSCC). The SMD numbers listed below must be used when ordering.

Detailed Electrical Specifications for the ACS147MS are contained in SMD 5962-98633. A “hot-link” is provided on our homepage for downloading.
http://www.intersil.com/spacedefense/spaceselect.htm

Features

- QML Qualified Per MIL-PRF-38535 Requirements
- 1.25 Micron Radiation Hardened SOS CMOS
- Radiation Environment
  - Latch-Up Free Under Any Conditions
  - Total Dose (Max.) . . . . . 3×10^5 RAD(Si)
  - SEU Immunity. . . . . $<1 \times 10^{-10}$ Errors/Bit/Day
  - SEU LET Threshold . . . . . >100MeV/(mg/cm^2)
- Input Logic Levels. . . . $V_{IL} = (0.3)(V_{CC})$, $V_{IH} = (0.7)(V_{CC})$
- Output Current . . . . . ±12mA (Min)
- Quiescent Supply Current . . . . . 20µA (Max)
- Propagation Delay . . . . . 17ns (Max)

Applications

- High Speed Control Circuits
- Sensor Monitoring
- Low Power Designs

Ordering Information

ORDERING NUMBER	INTERNAL MARKETING NUMBER	TEMP. RANGE (^{o}C)	PACKAGE	DESIGNATOR
5962F9863301VCC	ACS147DMSR-03	-55 to 125	16 Ld SBDIP	CDIP2-T16
ACS147D/SAMPLE-03	ACS147D/SAMPLE-03	25	16 Ld SBDIP	CDIP2-T16
5962F9863301VXC	ACS147KMSR-03	-55 to 125	16 Ld Flatpack	CDFP4-F16
ACS147K/SAMPLE-03	ACS147K/SAMPLE-03	25	16 Ld Flatpack	CDFP4-F16
5962F9863301V9A	ACS147HMSR-03	25	Die	NA

Pinouts

ACS147MS
(SBDIP)
TOP VIEW

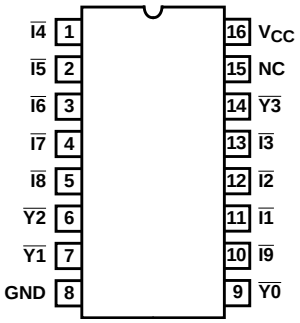

ACS147MS
(FLATPACK)
TOP VIEW

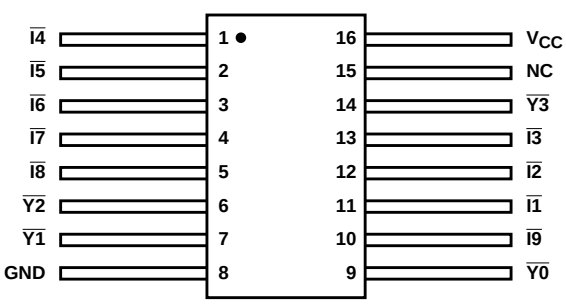

CAUTION: These devices are sensitive to electrostatic discharge; follow proper IC Handling Procedures.
1-888-INTERSIL or 321-724-7143 | Copyright © Intersil Corporation 1999

Die Characteristics

DIE DIMENSIONS:

Size: 2390µm x 2390µm (94 mils x 94 mils)
Thickness: 525µm ±25µm (20.6 mils ±1 mil)
Bond Pad: 110µm x 110µm (4.3 x 4.3 mils)

METALLIZATION: AI

Metal 1 Thickness: 0.7µm ±0.1µm
Metal 2 Thickness: 1.0µm ±0.1µm

SUBSTRATE POTENTIAL

Unbiased Insulator

PASSIVATION:

Type: Phosphorous Silicon Glass (PSG)
Thickness: 1.30µm ±0.15µm

SPECIAL INSTRUCTIONS

Bond V_{CC} First

ADDITIONAL INFORMATION:

Worst Case Current Density: $<2.0 \times 10^5$ A/cm^2
Transistor Count: 233

Metallization Mask Layout

ACS147MS

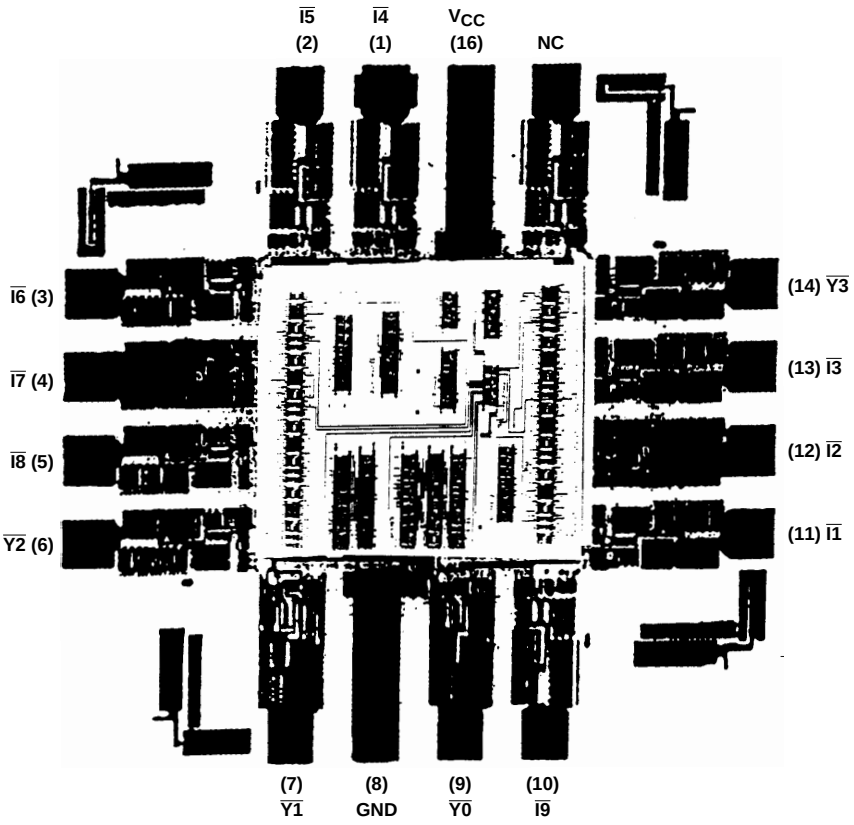

All Intersil semiconductor products are manufactured, assembled and tested under **ISO9000** quality systems certification.

Intersil semiconductor products are sold by description only. Intersil Corporation reserves the right to make changes in circuit design and/or specifications at any time without notice. Accordingly, the reader is cautioned to verify that data sheets are current before placing orders. Information furnished by Intersil is believed to be accurate and reliable. However, no responsibility is assumed by Intersil or its subsidiaries for its use; nor for any infringements of patents or other rights of third parties which may result from its use. No license is granted by implication or otherwise under any patent or patent rights of Intersil or its subsidiaries.

For information regarding Intersil Corporation and its products, see web site **www.intersil.com**

Sales Office Headquarters

NORTH AMERICA
Intersil Corporation
P. O. Box 883, Mail Stop 53-204
Melbourne, FL 32902
TEL: (321) 724-7000
FAX: (321) 724-7240

EUROPE
Intersil SA
Mercure Center
100, Rue de la Fusee
1130 Brussels, Belgium
TEL: (32) 2.724.2111
FAX: (32) 2.724.22.05

ASIA
Intersil (Taiwan) Ltd.
7F-6, No. 101 Fu Hsing North Road
Taipei, Taiwan
Republic of China
TEL: (886) 2 2716 9310
FAX: (886) 2 2715 3029