ACPM-7620

Multiband Multimode PA
Quad-Band GSM/EDGE and Multi Mode
B1/B2/B3/B4/B5(26)/B8/B20/B34/B39

Product Brief

Description

The ACPM- 7620 is a multiband, multimode PA (power amplifier) that supports GMSK and 8-PSK modulation schemes and UMTS/LTE bands 1, 2/25, 3, 4, 5/26, 8, and 20. The ACPM-7620 supports both the ET (envelope tracking) and APT (average power tracking) operations.

Input and output terminals are internally matched to 50 ohms. The power amplifier is manufactured on an advanced InGaP HBT technology that offers state-of-the-art reliability, temperature stability, and ruggedness. This module is housed in a cost effective, extremely small and thin 5 mm × 7 mm package.

Features

- Quad-band GSM/EDGE
- UMTS/LTE B1, B2/25, B3, B4, B5/26, B8, and B20
- TD-SCDMA B34/B39 and TD-LTE B39
- Compatible with MIPI RFFE
- Small size (7 mm × 5 mm)
- Excellent linearity
- High efficiency
- Bias (quiescent current) control by MIPI RFFE
- Forty-two-pin surface mounting package
- Internal 50-ohm matching networks for both RF input and output
- Green – Lead-free and RoHS compliant

Application

- GSM850/900, DCS1800/PCS1900
- UMTS/LTE B1
- UMTS/LTE B2, LTE B25, C2K BC1
- UMTS/LTE B3
- UMTS/LTE B4
- UMTS/LTE B5, LTE B26, C2K BC0
- UMTS/LTE B8
- LTE B20

Ordering Information

Part Number	Number of Devices	Container	Description
ACPM-7620-TR1	1,000	178 mm (7 in.) tape/reel	ET and APT

Package Dimensions

The dimensions are in millimeters.

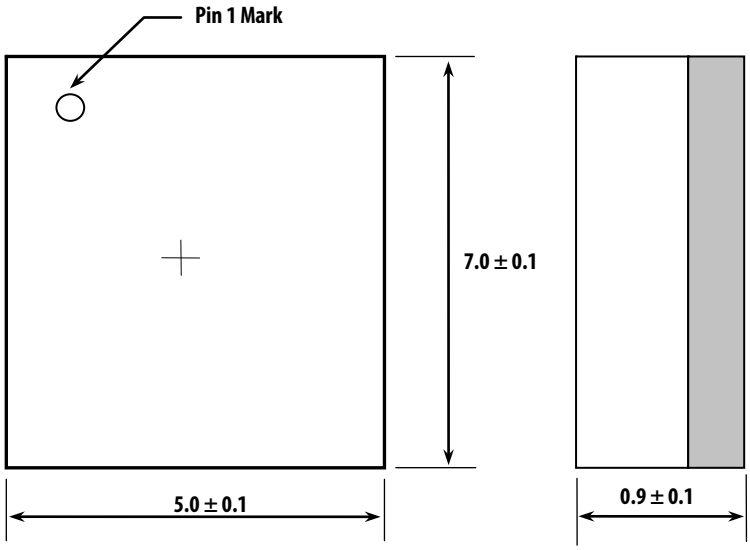

Marking Specification

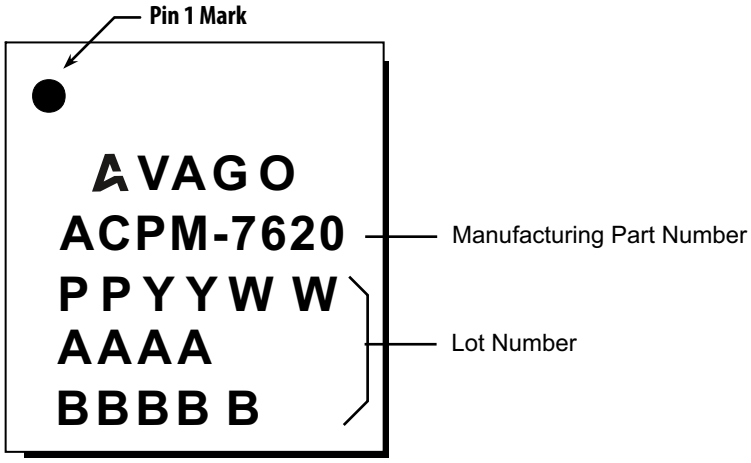

Pin Description

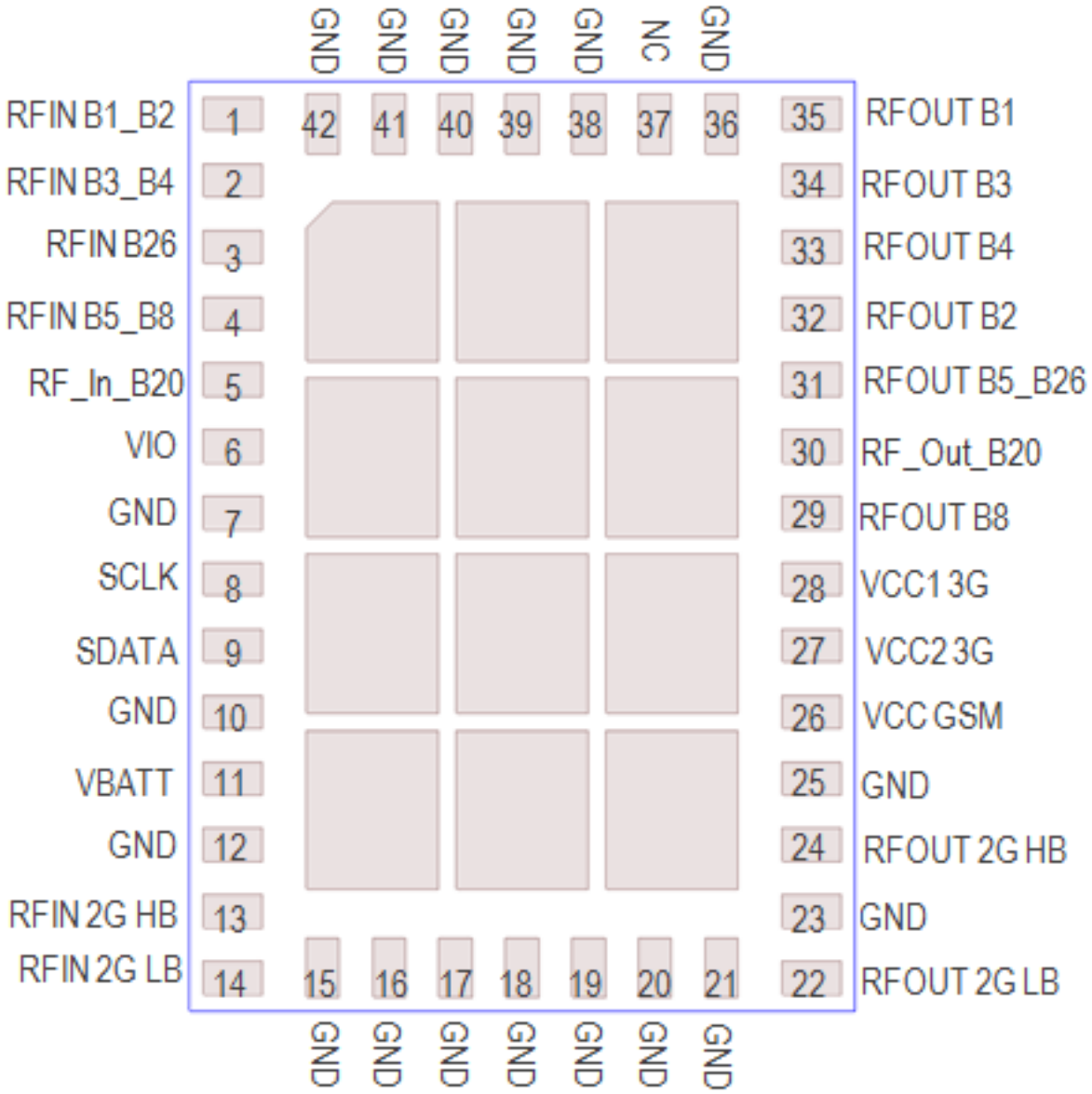

For product information and a complete list of distributors, please go to our web site:
www.avagotech.com

Avago, Avago Technologies, and the A logo are trademarks of Avago Technologies in the United States and other countries. All other brand and product names may be trademarks of their respective companies.

Data subject to change. Copyright © 2015 Avago Technologies. All Rights Reserved.

AV02-4875EN – 2015-03-24

Lead (Pb) Free
RoHS 6 fully compliant
RoHS 6 fully compliant options available;
-xxxE denotes a lead-free product