ACPM-7312

UMTS Band5 (824-849MHz) 4x4 Power Amplifier Module

Data Sheet

Description

The ACPM-7312 is a fully matched 10-pin surface mount module developed for UMTS Band5. This power amplifier module operates in the 824-849MHz bandwidth. The ACPM-7312 meets stringent UMTS linearity requirements up to 28.25dBm output power. The 4mmx4mm form factor package is self contained, incorporating 50ohm input and output matching networks

The ACPM-7312 features 5th generation of CoolPAM circuit technology which supports 3 power modes – bypass, mid and high power modes. The CoolPAM is stage bypass technology enhancing PAE (power added efficiency) at low and medium power range. Active bypass feature is added to 5th generation to enhance PAE further at low output range. This helps to extend talk time.

The power amplifier is manufactured on an advanced InGaP HBT (hetero-junction Bipolar Transistor) MMIC (microwave monolithic integrated circuit) technology offering state-of-the-art reliability, temperature stability and ruggedness.

Features

- Thin Package (0.9mm typ)
- Excellent Linearity
- 3-mode power control with Vbp and Vmode
  - Bypass / Mid Power Mode / High Power Mode
- High Efficiency at max output power
- 10-pin surface mounting package
- Internal 50ohm matching networks for both RF input and output
- Lead-free, RoHS compliant, Green

Applications

- UMTS Band5

Ordering Information

Part Number	Number of Devices	Container
ACPM-7312-TR1	1,000	178mm (7") Tape/Reel
ACPM-7312-BLK	100	BULK

Block Diagram

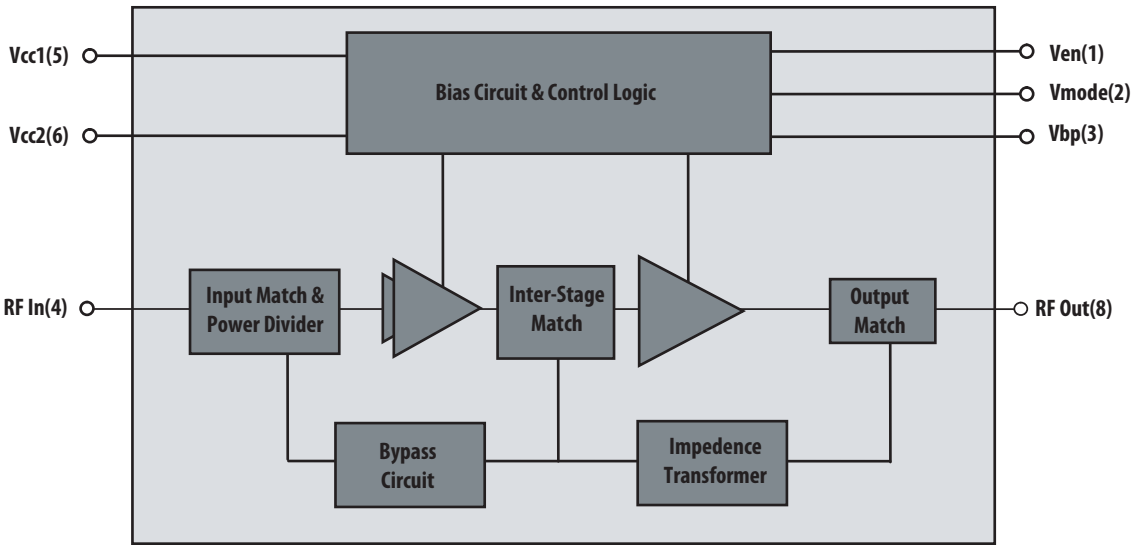

Absolute Maximum Ratings

No damage assuming only one parameter is set at limit at a time with all other parameters set at or below nominal value.

Operation of any single parameter outside these conditions with the remaining parameters set at or below nominal values may result in permanent damage.

Description	Min.	Typ.	Max.	Unit
RF Input Power (Pin)		0	10*	dBm
DC Supply Voltage (Vcc1, Vcc2)	0	3.4	5.0	V
Enable Voltage (Ven)	0	2.6	3.3	V
Mode Control Voltage (Vmode)	0	2.6	3.3	V
Bypass Control (Vbp)	0	2.6	3.3	V
Storage Temperature (Tstg)	-55	25	+125	°C

* High Power Mode (5dBm for Bypass and Mid Power Mode)

Recommended Operating Condition

Description		Min.	Typ.	Max.	Unit
DC Supply Voltage (Vcc1, Vcc2)		3.2	3.4	4.2	V
Enable Voltage (Ven)					
	Low	0	0	0.5	V
	High	1.35	2.6	3.1	V
Mode Control Voltage (Vmode)					
	Low	0	0	0.5	V
	High	1.35	2.6	3.1	V
Bypass Control Voltage (Vbp)					
	Low	0	0	0.5	V
	High	1.35	2.6	3.1	V
Operating Frequency (fo)		824		849	MHz
Ambient Temperature (Ta)		-20	25	85	°C

Operating Logic Table

Power Mode	Ven	Vmode	Vbp	Pout (Rel99)	Pout (HSDPA, HSUPA MPR=0dB)
High Power Mode	High	Low	Low	~ 28.25 dBm	~ 27.25 dBm
Mid Power Mode	High	High	Low	~ 17 dBm	~ 16 dBm
Bypass Mode	High	High	High	~ 8 dBm	~ 7 dBm
Shut Down Mode	Low	Low	Low	–	–

Electrical Characteristics for WCDMA Mode

– Conditions: Vcc = 3.4V, Ven = 2.6V, T = 25°C, Zin/Zout = 50ohm
– Signal Configuration: 3GPP (DPCCH + 1DPDCH) Up-Link unless specified otherwise.

Characteristics		Condition	Min.	Typ.	Max.	Unit
Operating Frequency Range			824	–	849	MHz
Gain		High Power Mode, Pout=28.25dBm	24	27		dB
		Mid Power Mode, Pout=17dBm	15	19		dB
		Bypass Mode, Pout=8dBm	10	15	18	dB
GPS Band Gain relative to Tx Gain, HPM		Ggps@Pin=-15dBm – Gtx@Pout=28.25dBm		-20	-3	dB
Rx Band Gain relative to Tx Gain, HPM		Grx@Pin=-15dBm – Gtx@Pout=28.25dBm		-1.4	-0.5	dB
ISM Band Gain relative to Tx Gain, HPM		Gism@Pin=-15dBm – Gtx@Pout=28.25dBm		-75	-6	dB
Power Added Efficiency		High Power Mode, Pout=28.25dBm	36.7	40.4		%
		Mid Power Mode, Pout=17dBm	14.6	20.8		%
		Bypass Mode, Pout=8dBm	9	13.8		%
Total Supply Current		High Power Mode, Pout=28.25dBm		485	535	mA
		Mid Power Mode, Pout=17dBm		70	100	mA
		Bypass Mode, Pout=8dBm		13	20	mA
Quiescent Current		High Power Mode	70	90	110	mA
		Mid Power Mode	10	20	30	mA
		Bypass Mode	2.3	3.3	4.3	mA
Enable Current		High Power Mode		10	25	µA
		Mid Power Mode		10	25	µA
		Bypass Mode		10	25	µA
Mode Control Current		Mid Power Mode		5	25	µA
		Bypass Mode		5	25	µA
Bypass Control Current		Bypass		5	25	µA
Total Current in Power-down mode		Ven=0V, Vmode=0V, Vbp=0V			5	µA
Adjacent Channel Leakage Ratio	5 MHz offset 10 MHz offset	High Power Mode, Pout=28.25dBm		-40 -56	-37 -47	dBc dBc
	5 MHz offset 10 MHz offset	High Power Mode, Pout=27.25dBm (HSDPA, HSUPA MPR=0dB)		-39 -56	-36 -47	dBc dBc
	5 MHz offset 10 MHz offset	Mid Power Mode, Pout=17dBm		-47 -62	-37 -47	dBc dBc
	5 MHz offset 10 MHz offset	Mid Power Mode, Pout=16dBm (HSDPA, HSUPA MPR=0dB)		-46 -60	-37 -47	dBc dBc
	5 MHz offset 10 MHz offset	Bypass Mode, Pout=8dBm		-49 -57	-37 -47	dBc dBc
	5 MHz offset 10 MHz offset	Bypass Mode, Pout=7dBm (HSDPA, HSUPA MPR=0dB)		-46 -61	-37 -47	dBc dBc

Electrical Characteristics for WCDMA Mode

– Conditions: Vcc = 3.4V, Ven = 2.6V, T = 25°C, Zin/Zout = 50ohm
– Signal Configuration: 3GPP (DPCCH + 1DPDCH) Up-Link unless specified otherwise.

Characteristics		Condition	Min.	Typ.	Max.	Unit
Harmonic Suppression	Second Third	High Power Mode, Pout=28.25dBm		-37 -64	-35 -40	dBc dBc
Gain at Harmonics	Second and Third				0	dB
Input VSWR				1.5	2.5:1	
Stability (Spurious Output)		Load VSWR 5:1, All phase			-60	dBc
Rx Band Noise Power (Vcc=4.2V)		High Power Mode, Pout=28.25dBm		-135.5	-134	dBm/Hz
GPS Band Noise (Vcc=4.2V)		High Power Mode, Pout=28.25dBm		-155	-140	dBm/Hz
ISM Band Noise (Vcc=4.2V)		High Power Mode, Pout=28.25dBm		-159	-144	
Phase Discontinuity		HPM↔MPM, Pout=17dBm MPM↔BPM, Pout=8dBm		4 20	45 45	deg deg
Ruggedness		Pout<28.25dBm & Pin<5dBm, All phase, High Power Mode			8:1	VSWR

1. HSDPA
   - 3GPP TS 34.121-1
   - User Equipment (UE) conformance specification; Radio transmission and reception (FDD); Part 1: Conformance specification
   - Annex C (normative): Measurement channels
   - C.10.1 UL reference measurement channel for HSDPA tests
   - Table C.10.1.4: β values for transmitter characteristics tests with HS-DPCCH
   - Sub-test 2 (CM=1.0dB, MPR=0.0dB)

2. HSUPA
   - 3GPP TS 34.121-1
   - User Equipment (UE) conformance specification; Radio transmission and reception (FDD); Part 1: Conformance specification
   - Annex C (normative): Measurement channels
   - C.11.1 UL reference measurement channel for E-DCH tests
   - Table C.11.1.3: β values for transmitter characteristics tests with HS-DPCCH and E-DCH
   - Sub-test 1 (CM=1.0dB, MPR=0.0dB)

Footprint

All dimensions are in millimeter

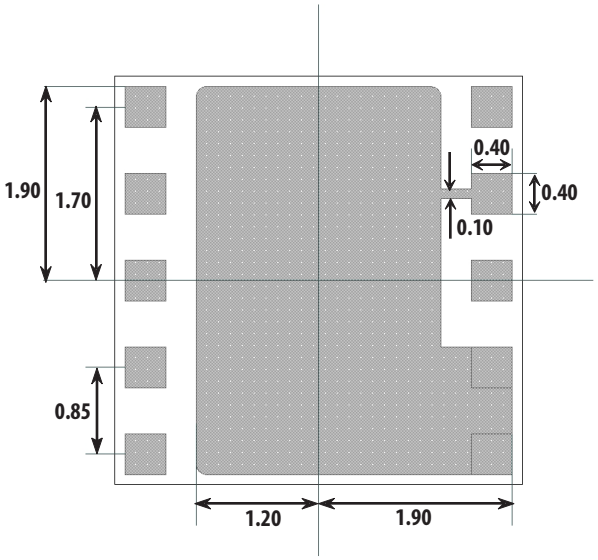

X-Ray Top View

PIN Description

Pin #	Name	Description
1	Ven	PA Enable
2	Vmode	Mode Control
3	Vbp	Bypass Control
4	RFin	RF Input
5	Vcc1	DC Supply Voltage
6	Vcc2	DC Supply Voltage
7	GND	Ground
8	RFout	RF Output
9	GND	Ground
10	GND	Ground

Package Dimensions

All dimensions are in millimeter

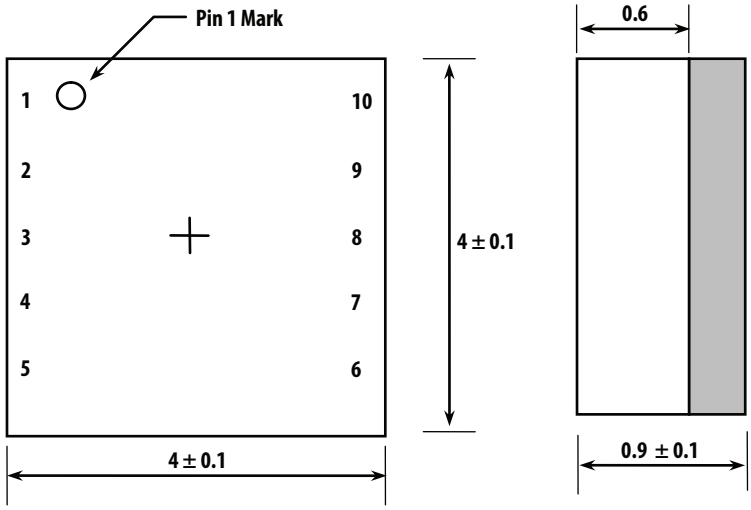

Marking Specification

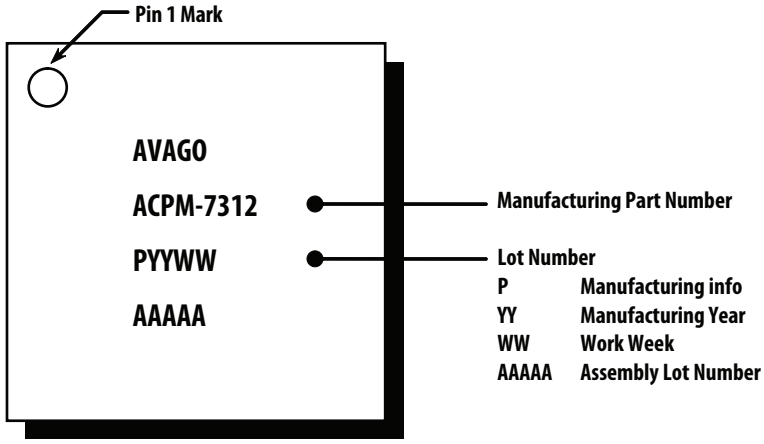

CoolPAM

Avago Technologies' CoolPAM is stage-bypass PA technology which saves more power compared with conventional PA. With this technology, the ACPM-7312 has very low quiescent current, and efficiencies at low and medium output power ranges are high.

Incorporation of bias circuit

The ACPM-7312 has internal bias circuit, which removes the need for external constant voltage source (LDO). PA on/off is controlled by Ven. This is digitally control pin.

3-mode power control with two mode control pins

The ACPM-7312 supports three power modes (bypass power mode/mid power mode/high power mode) with two mode control pins (Vmode and Vbp). This control scheme enables the ACPM-7312 to save power consumption more, which accordingly gives extended talk time.

PDF (probability density function) showing distribution of output power of mobile in real field gives motivation for stage-bypass PA. Output power is less than 16dBm for most of operating time (during talking), so it is important to save power consumption at low and medium output power ranges.

Average current & Talk time

Average current consumed by PA can be calculated by summing up current at each output power weighted with probability. So it is expressed with integration of multiplication of current and probability at each output power.

$$\text{Average current} = \int (\text{PDF} \times \text{Current})dp$$

Talk time is extended more as average current consumption is lowered.

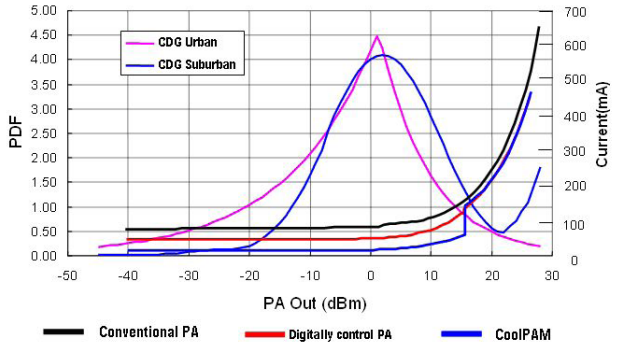

Figure 1. PDF and Current

Mode control pins

Vmode and Vbp are digitally controlled by baseband and they control the operating mode of the PA. The operating logic table is summarized on the page 2. These pins do not require constant voltage for interface.

UMTS PA performance comparison

– CoolPAM 4 and CoolPAM 5

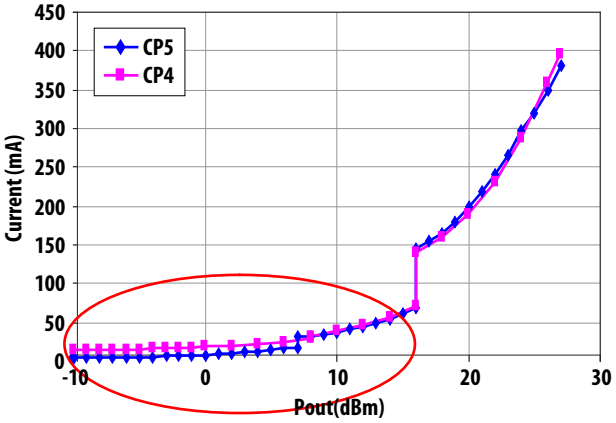

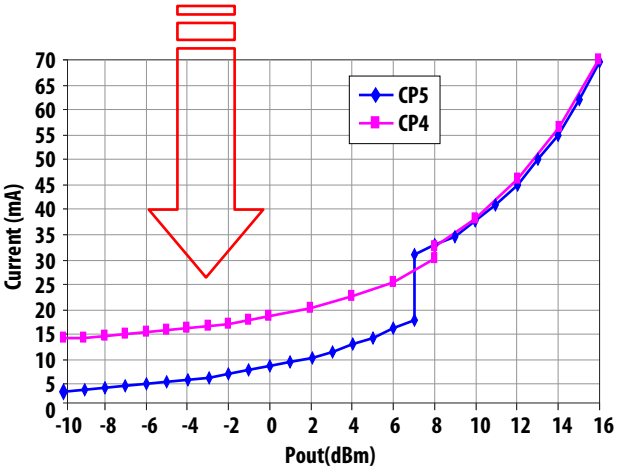

Icc Comparison of CP5 to CP4 (Avago CoolPAM)

The 5th generation of CoolPAM technology, ACPM-7312 can dramatically reduce Icc down to 3mA at bypass mode, which improves overall talk time and battery usage time of handset more compared with the CP4.

Application on mobile phone board

Application example in mobile is shown below. C4 and C5 should be placed close to pin1 and pin10. Bypass cap C1, C2 and C3 should be also placed nearby from pin5, pin4 and pin3, respectively. The length of post-PA transmission line should be minimized to reduce line loss.

Peripheral Circuits

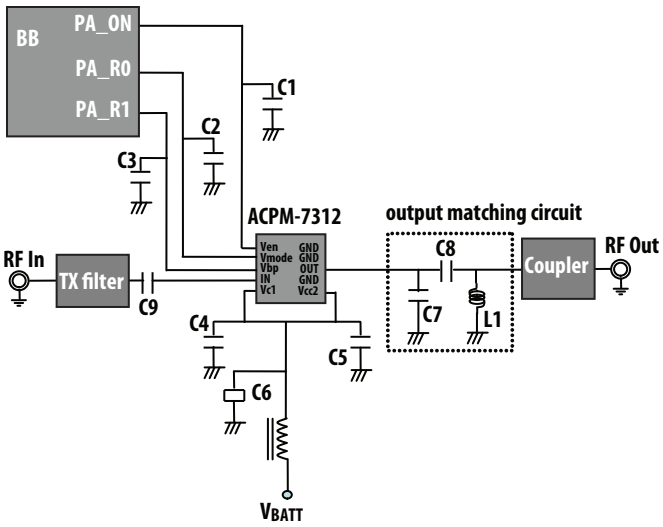

PCB layout and part placement on phone board

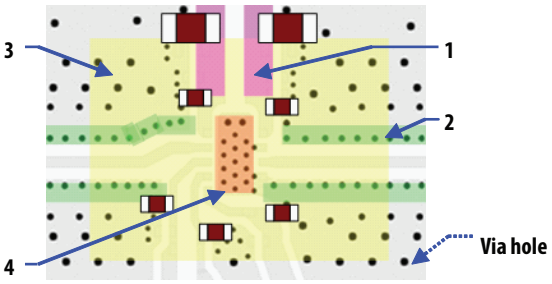

PCB guideline on phone board

Note

1. To prevent voltage drop, make the bias lines as wide as possible (Pink line).
2. Use many via holes to fence off PA RF input and output traces for better isolation. Output signal of the PA should be isolated from input signal and the receive signal. Output signal should not be fed into PA input. (Green line)
3. Use via holes to connect outer ground plates to internal ground planes. They help heat spread out more easily and accordingly the board temperature can be lowered. They also help to improve RF stability (Yellow square).
4. PA which has a ground slug requires many via holes which go through all the layers (Red square).

Metallization

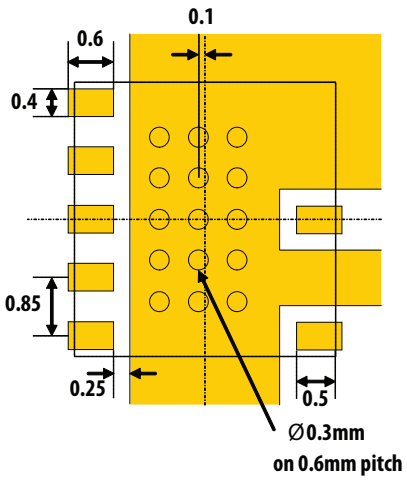

Solder Mask Opening

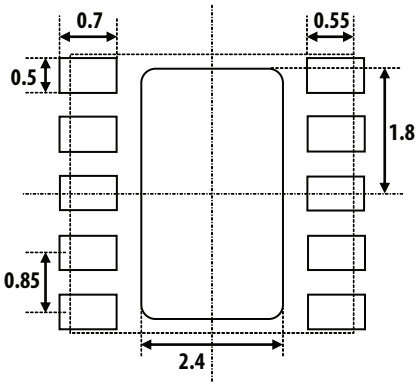

Solder Paste Stencil Aperture

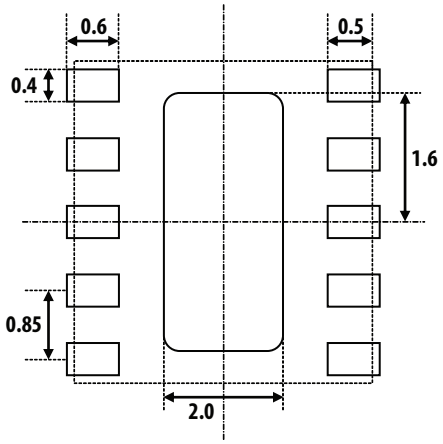

PCB Design Guidelines

The recommended PCB land pattern is shown in figures on the left side. The substrate is coated with solder mask between the I/O and conductive paddle to protect the gold pads from short circuit that is caused by solder bleeding/bridging.

Stencil Design Guidelines

A properly designed solder screen or stencil is required to ensure optimum amount of solder paste is deposited onto the PCB pads.

The recommended stencil layout is shown here. Reducing the stencil opening can potentially generate more voids. On the other hand, stencil openings larger than 100% will lead to excessive solder paste smear or bridging across the I/O pads or conductive paddle to adjacent I/O pads. Considering the fact that solder paste thickness will directly affect the quality of the solder joint, a good choice is to use laser cut stencil composed of 0.100mm(4mils) or 0.127mm(5mils) thick stainless steel which is capable of producing the required fine stencil outline.

Evaluation Board Schematic

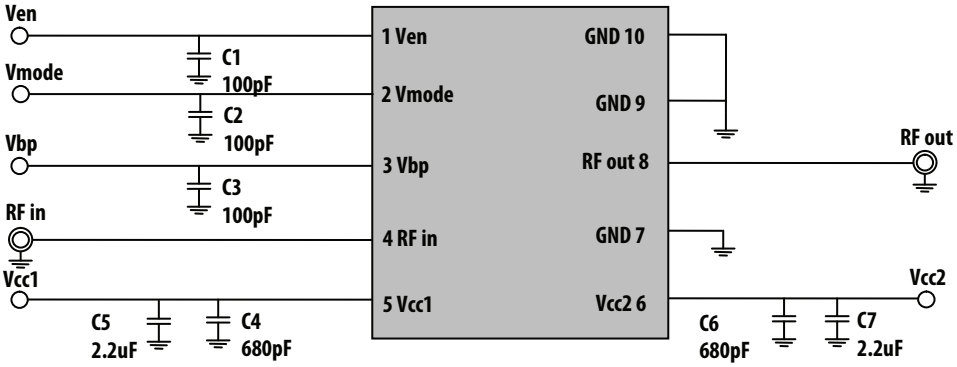

Evaluation Board Description

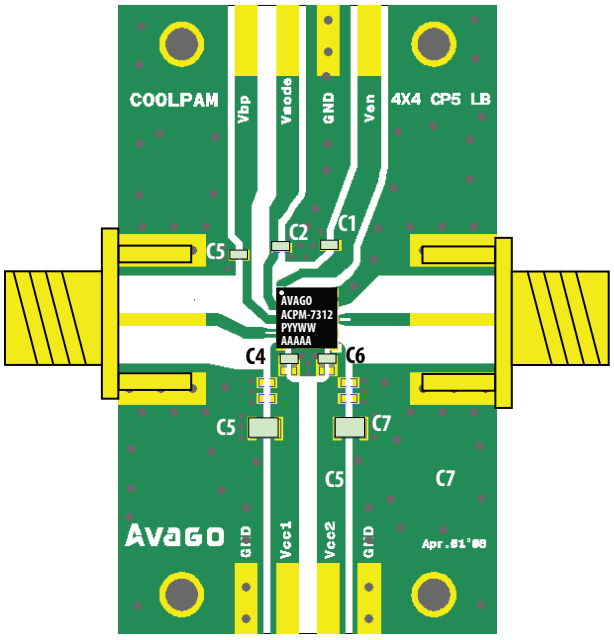

Tape and Reel Information

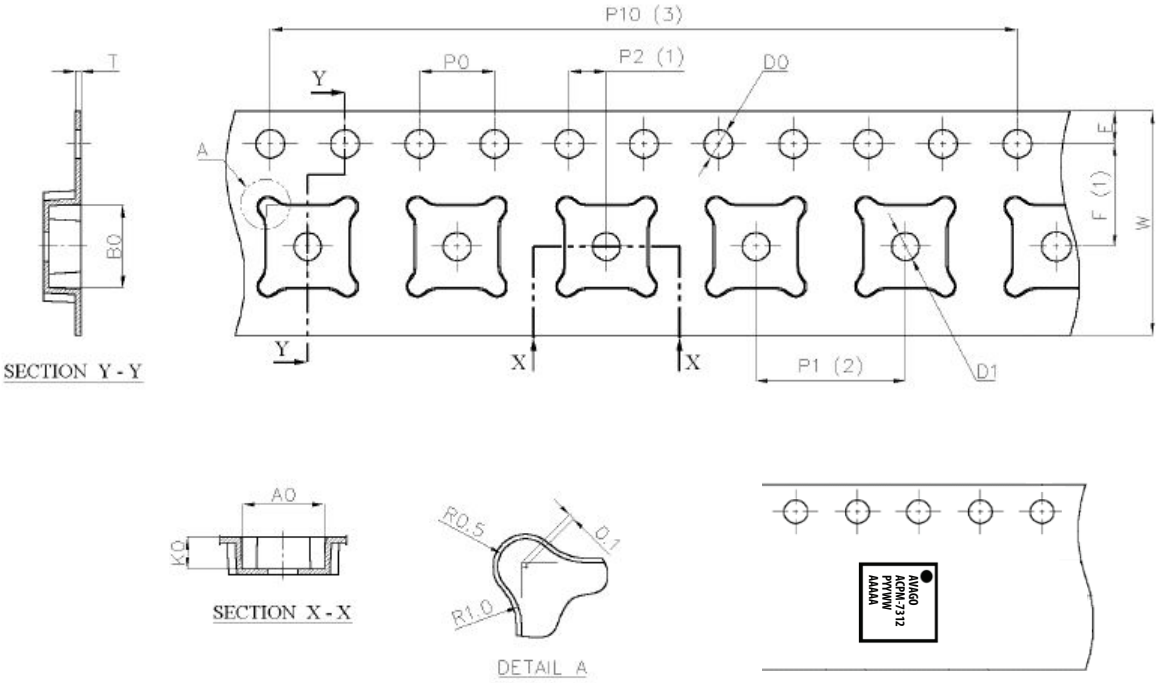

Dimension List

Annote	Millimeter
A0	4.40±0.10
B0	4.40±0.10
K0	1.70±0.10
D0	1.55±0.05
D1	1.60±0.10
P0	4.00±0.10
P1	8.00±0.10

Annote	Millimeter
P2	2.00±0.05
P10	40.00±0.20
E	1.75±0.10
F	5.50±0.05
W	12.00±0.30
T	0.30±0.05

Tape and Reel Format – 4 mm x 4 mm.

Reel Drawing

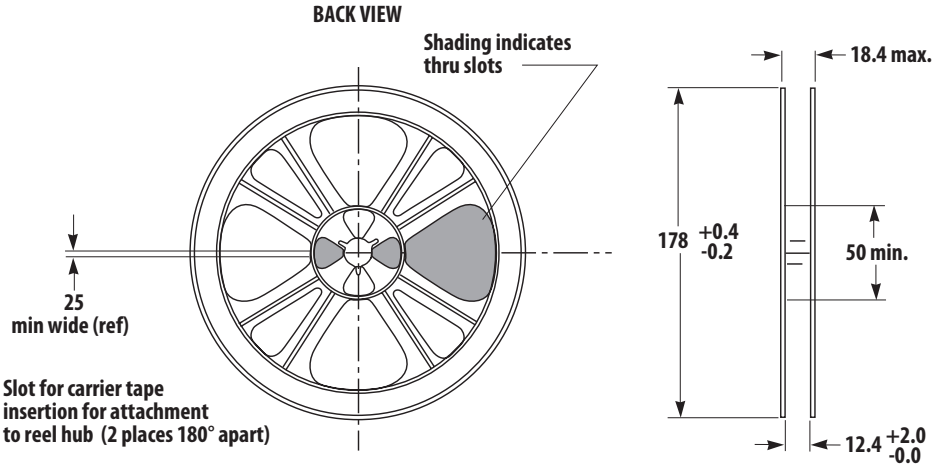

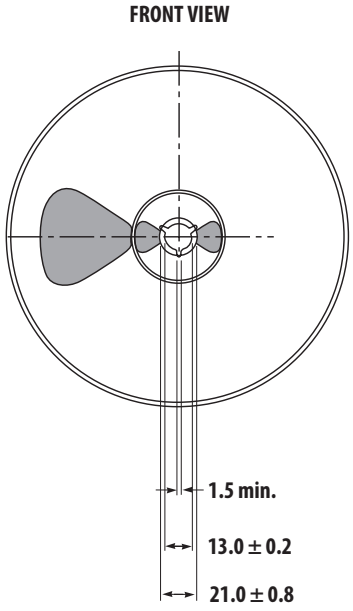

NOTES:
1. Reel shall be labeled with the following information (as a minimum).
   a. manufacturers name or symbol
   b. Avago Technologies part number
   c. purchase order number
   d. date code
   e. quantity of units
2. A certi cate of compliance (c of c) shall be issued and accompany each shipment of product.
3. Reel must not be made with or contain ozone depleting materials.
4. All dimensions in millimeters (mm)

Plastic Reel Format (all dimensions are in millimeters)

Handling and Storage

ESD (Electrostatic Discharge)

Electrostatic discharge occurs naturally in the environment. With the increase in voltage potential, the outlet of neutralization or discharge will be sought. If the acquired discharge route is through a semiconductor device, destructive damage will result.

ESD countermeasure methods should be developed and used to control potential ESD damage during handling in a factory environment at each manufacturing site.

MSL (Moisture Sensitivity Level)

Plastic encapsulated surface mount package is sensitive to damage induced by absorbed moisture and temperature.

Avago Technologies follows JEDEC Standard J-STD 020B. Each component and package type is classified for moisture sensitivity by soaking a known dry package at various temperatures and relative humidity, and times. After soak, the components are subjected to three consecutive simulated reflows.

The out of bag exposure time maximum limits are determined by the classification test describe below which corresponds to a MSL classification level 6 to 1 according to the JEDEC standard IPC/JEDEC J-STD-020B and J-STD-033.

ACPM-7312 is MSL3. Thus, according to the J-STD-033 p.11 the maximum Manufacturers Exposure Time (MET) for this part is 168 hours. After this time period, the part would need to be removed from the reel, de-taped and then re-baked. MSL classification reflow temperature for the ACPM-7312 is targeted at 260°C +0/-5°C. Figure and table on next page show typical SMT profile for maximum temperature of 260 +0/-5°C.

Moisture Classification Level and Floor Life

MSL Level	Floor Life (out of bag) at factory ambient = < 30°C/60% RH or as stated
1	Unlimited at = < 30°C/85% RH
2	1 year
2a	4 weeks
3	**168 hours**
4	72 hours
5	48 hours
5a	24 hours
6	Mandatory bake before use. After bake, must be reflowed within the time limit specified on the label

Note :
1. The MSL Level is marked on the MSL Label on each shipping bag.

Reflow Profile Recommendations

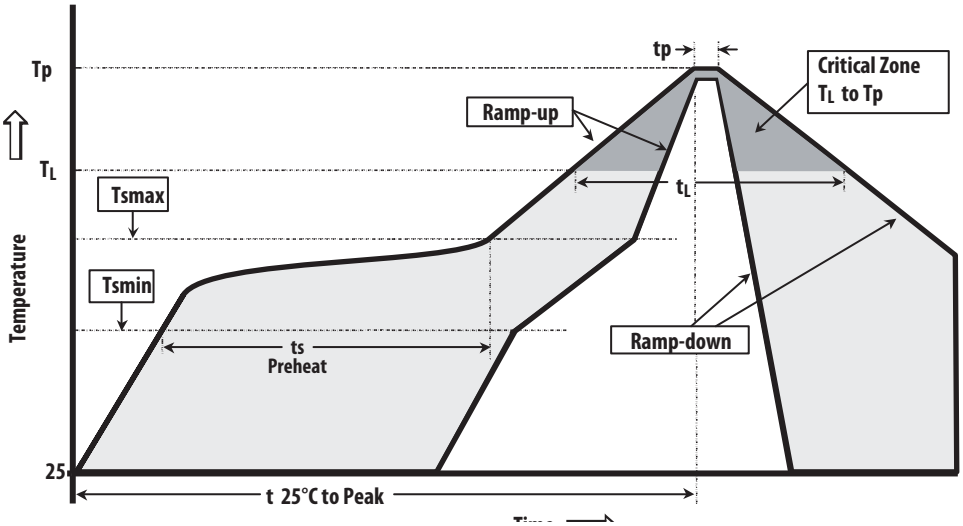

Typical SMT Reflow Profile for Maximum Temperature = 260 +0/-5°C.

Typical SMT Reflow Profile for Maximum Temperature = 260 +0/-5°C

Profile Feature	Sn-Pb Solder	Pb-Free Solder
Average ramp-up rate (TL to TP)	3°C/sec max	3°C/sec max
Preheat – Temperature Min (Tsmin) – Temperature Max (Tsmax) – Time (min to max) (ts)	 100°C 150°C 60-120 sec	 150°C 200°C 60-180 sec
Tsmax to TL – Ramp-up Rate		3°C/sec max
Time maintained above: – Temperature (TL) – Time (TL)	 183°C 60-150 sec	 217°C 60-150 sec
Peak temperature (Tp)	240 +0/-5°C	260 +0/-5°C
Time within 5°C of actual Peak Temperature (tp)	10-30 sec	20-40 sec
Ramp-down Rate	6°C/sec max	6°C/sec max
Time 25°C to Peak Temperature	6 min max.	8 min max.

Storage Condition

Packages described in this document must be stored in sealed moisture barrier, antistatic bags. Shelf life in a sealed moisture barrier bag is 12 months at <40°C and 90% relative humidity (RH) J-STD-033 p.7.

Out-of-Bag Time Duration

After unpacking the device must be soldered to the PCB within 168 hours as listed in the J-STD-020B p.11 with factory conditions <30°C and 60% RH.

Baking

It is not necessary to re-bake the part if both conditions (storage conditions and out-of bag conditions) have been satisfied. Baking must be done if at least one of the conditions above have not been satisfied. The baking conditions are 125°C for 12 hours J-STD-033 p.8.

CAUTION

Tape and reel materials typically cannot be baked at the temperature described above. If out-of-bag exposure time is exceeded, parts must be baked for a longer time at low temperatures, or the parts must be de-reeled, de-taped, re-baked and then put back on tape and reel. (See moisture sensitive warning label on each shipping bag for information of baking).

Board Rework

Component Removal, Rework and Remount

If a component is to be removed from the board, it is recommended that localized heating be used and the maximum body temperatures of any surface mount component on the board not exceed 200°C. This method will minimize moisture related component damage. If any component temperature exceeds 200°C, the board must be baked dry per 4-2 prior to rework and/or component removal. Component temperatures shall be measured at the top center of the package body. Any SMD packages that have not exceeded their floor life can be exposed to a maximum body temperature as high as their specified maximum reflow temperature.

Removal for Failure Analysis

Not following the above requirements **may cause moisture/** reflow **damage that could hinder or completely prevent** the **determination of the original failure mechanism.**

Baking of Populated Boards

Some SMD packages and board materials are not able to withstand long duration bakes at 125°C. Examples of this are some FR-4 materials, which cannot withstand a 24 hr bake at 125°C. Batteries and electrolytic capacitors are also temperature sensitive. With component and board temperature restrictions in mind, choose a bake temperature from Table 4-1 in J-STD 033; then determine the appropriate bake duration based on the component to be removed. For additional considerations see IPC-7711 andIPC-7721.

Derating due to Factory Environmental Conditions

Factory floor life exposures for SMD packages removed from the dry bags will be a function of the ambient environmental conditions. A safe, yet conservative, handling approach is to expose the SMD packages only up to the maximum time limits for each moisture sensitivity level as shown in next table. This approach, however, does not work if the factory humidity or temperature is greater than the testing conditions of 30°C/60% RH. A solution for addressing this problem is to derate the exposure times based on the knowledge of moisture diffusion in the component package materials ref. JESD22-A120). Recommended equivalent total floor life exposures can be estimated for a range of humidities and temperatures based on the nominal plastic thickness for each device.

Table on next page lists equivalent derated floor lives for humidities ranging from 20-90% RH for three temperature, 20°C, 25°C, and 30°C.

Table on next page is applicable to SMDs molded with novolac, biphenyl or multifunctional epoxy mold compounds. The following assumptions were used in calculating this table:

1. Activation Energy for diffusion = 0.35eV (smallest known value).
2. For ≤60% RH, use Diffusivity = 0.121exp (-0.35eV/kT) mm2/s (this used smallest known Diffusivity @ 30°C).
3. For >60% RH, use Diffusivity = 1.320exp (-0.35eV/kT) mm2/s (this used largest known **Diffusivity @ 30°C).**

Recommended Equivalent Total Floor Life (days) @ 20°C, 25°C & 30°C, 35°C

For ICs with Novolac, Biphenyl and Multifunctional Epoxies (Reflow at same temperature at which the component was classified) Maximum Percent Relative Humidity

Maximum Percent Relative Humidity												
Package Type and Body Thickness	**Moisture Sensitivity Level**	**5%**	**10%**	**20%**	**30%**	**40%**	**50%**	**60%**	**70%**	**80%**	**90%**	
Body Thickness ≥3.1 mm Including PQFPs >84 pin, PLCCs (square) All MQFPs or All BGAs ≥1 mm	Level 2a	∞	∞	94	44	32	26	16	7	5	4	35°C
		∞	∞	124	60	41	33	28	10	7	6	30°C
		∞	∞	167	78	53	42	36	14	10	8	25°C
		∞	∞	231	103	69	57	47	19	13	10	20°C
	Level 3	∞	∞	8	7	6	6	6	4	3	3	35°C
		∞	∞	10	9	8	7	7	5	4	4	30°C
		∞	∞	13	11	10	9	9	7	6	5	25°C
		∞	∞	17	14	13	12	12	10	8	7	20°C
	Level 4	∞	3	3	3	2	2	2	2	1	1	35°C
		∞	5	4	4	4	3	3	3	2	2	30°C
		∞	6	5	5	5	5	4	3	3	3	25°C
		∞	8	7	7	7	7	6	5	4	4	20°C
	Level 5	∞	2	2	2	2	1	1	1	1	1	35°C
		∞	4	3	3	2	2	2	2	1	1	30°C
		∞	5	5	4	4	3	3	2	2	2	25°C
		∞	7	7	6	5	5	4	3	3	3	20°C
	Level 5a	∞	1	1	1	1	1	1	1	1	1	35°C
		∞	2	1	1	1	1	1	1	1	1	30°C
		∞	3	2	2	2	2	2	1	1	1	25°C
		∞	5	4	3	3	3	2	2	2	2	20°C
Body 2.1 mm ≤ Thickness <3.1 mm including PLCCs (rectangular) 18-32 pin SOICs (wide body) SOICs ≥20 pins, PQFPs ≤80 pins	Level 2a	∞	∞	∞	∞	58	30	22	3	2	1	35°C
		∞	∞	∞	∞	86	39	28	4	3	2	30°C
		∞	∞	∞	∞	148	51	37	6	4	3	25°C
		∞	∞	∞	∞	∞	69	49	8	5	4	20°C
	Level 3	∞	∞	12	9	7	6	5	2	2	1	35°C
		∞	∞	19	12	9	8	7	3	2	2	30°C
		∞	∞	25	15	12	10	9	5	3	3	25°C
		∞	∞	32	19	15	13	12	7	5	4	20°C
	Level 4	∞	5	4	3	3	2	2	1	1	1	35°C
		∞	7	5	4	4	3	3	2	2	1	30°C
		∞	9	7	5	5	4	4	3	2	2	25°C
		∞	11	9	7	6	6	5	4	3	3	20°C
	Level 5	∞	3	2	2	2	2	1	1	1	1	35°C
		∞	4	3	3	2	2	2	1	1	1	30°C
		∞	5	4	3	3	3	3	2	1	1	25°C
		∞	6	5	5	4	4	4	3	3	2	20°C
	Level 5a	∞	1	1	1	1	1	1	1	0.5	0.5	35°C
		∞	2	1	1	1	1	1	1	0.5	0.5	30°C
		∞	2	2	2	2	2	2	1	1	1	25°C
		∞	3	2	2	2	2	2	2	2	1	20°C
Body Thickness <2.1 mm including SOICs <18 pin All TQFPs, TSOPs or All BGAs <1 mm body thickness	Level 2a	∞	∞	∞	∞	∞	∞	17	1	0.5	0.5	35°C
		∞	∞	∞	∞	∞	∞	28	1	1	1	30°C
		∞	∞	∞	∞	∞	∞	∞	2	1	1	25°C
		∞	∞	∞	∞	∞	∞	∞	2	2	1	20°C
	Level 3	∞	∞	∞	∞	∞	8	5	1	0.5	0.5	35°C
		∞	∞	∞	∞	∞	11	7	1	1	1	30°C
		∞	∞	∞	∞	∞	14	10	2	1	1	25°C
		∞	∞	∞	∞	∞	20	13	2	2	1	20°C
	Level 4	∞	∞	∞	7	4	3	2	1	0.5	0.5	35°C
		∞	∞	∞	9	5	4	3	1	1	1	30°C
		∞	∞	∞	12	7	5	4	2	1	1	25°C
		∞	∞	∞	17	9	7	6	2	2	1	20°C
	Level 5	∞	∞	7	3	2	2	1	1	0.5	0.5	35°C
		∞	∞	13	5	3	2	2	1	1	1	30°C
		∞	∞	18	6	4	3	3	2	1	1	25°C
		∞	∞	26	8	6	5	4	2	2	1	20°C
	Level 5a	∞	7	2	1	1	1	1	1	0.5	0.5	35°C
		∞	10	3	2	1	1	1	1	1	0.5	30°C
		∞	13	5	3	2	2	2	1	1	1	25°C
		∞	18	6	4	3	2	2	2	2	1	20°C

For product information and a complete list of distributors, please go to our web site: **www.avagotech.com**

Avago, Avago Technologies, and the A logo are trademarks of Avago Technologies in the United States and other countries.
Data subject to change. Copyright © 2005-2009 Avago Technologies. All rights reserved.
AV02-1945EN - May 29, 2009