Thin Film Common Mode Filter

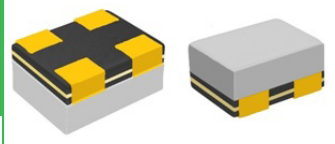

1.25 x 1.00 x 0.50mm

ACMF-04

Pb | RoHS/RoHS II Compliant

FEATURES:

- Compact thin film low profile design
- Effective for suppressing common mode noise at high frequency
- Wide bandwidth (cutoff frequency: 5.0GHz) for high speed differential signals.
- Supports lead-free soldering.

APPLICATIONS:

- Common mode noise suppression of differential signal lines in high speed and high-density digital equipments such as USB 2.0, IEEE1394, LVDS, Digital Camera, Scanner, etc.
- Digital audio and video equipments such as PDA, DSC, DVC, CD Player, DVD Player, etc.

ELECTRICAL SPECIFICATIONS:

Operating Temperature: -55˚C to +150˚C

Storage Temperature: +22˚C to +28˚C, 80% RH max (In tape and reel)

Part No	Impedance (Ω)	Impedance Tolerance (%)	Test Frequency (MHz)	DCR (Ω) [1 line].	IDC (mA) max.	Rated Voltage (V) max.	Cutoff Frequency (GHz) typ.	Insulation Resistance (MΩ) min.
ACMF-04-900-T	90	±20%	100	2.8±25%	100	10	5.0	10

FREQUENCY CHARACTERISTICS

ACMF-04-900

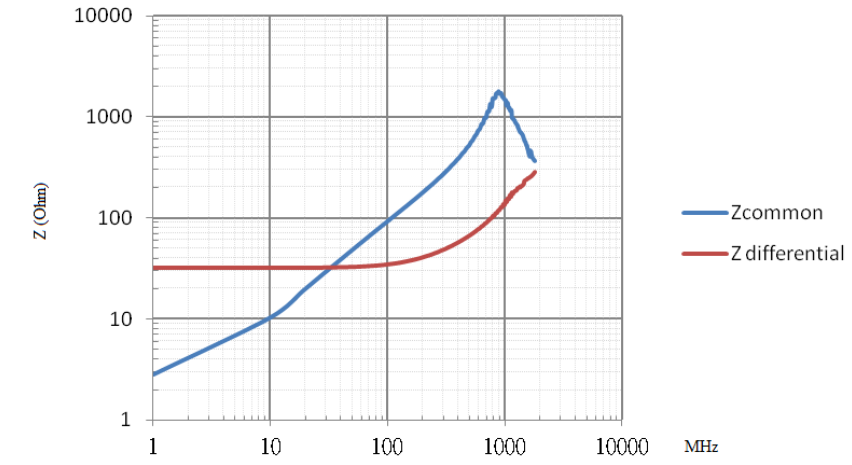

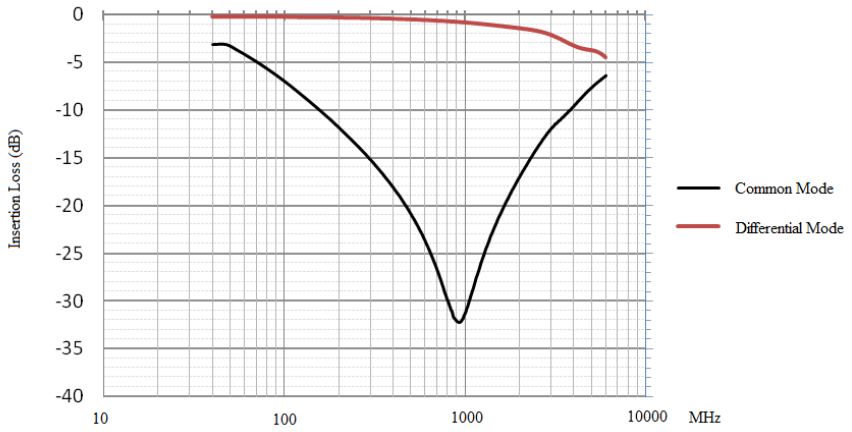

30332 Esperanza, Rancho Santa Margarita, California 9268
tel 949-546-8000 | fax 949-546-8001 | www.abracon.com

Thin Film Common Mode Filter

ACMF-04

RoHS/RoHS II Compliant

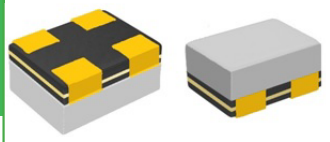

1.25 x 1.00 x 0.50mm

OUTLINE DRAWING:

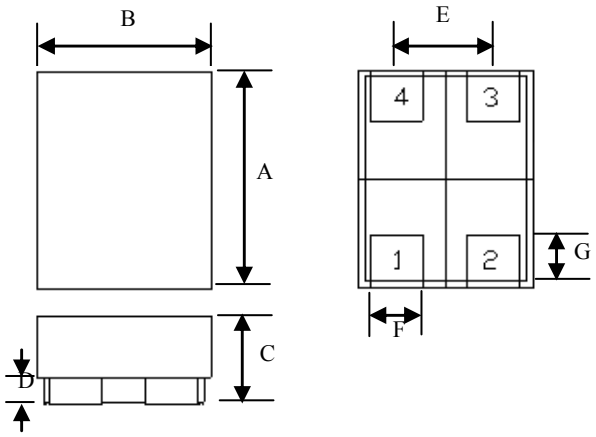

A	B	C	D	E	F	G
1.25±0.15	1.00±0.15	0.5±0.15	0.15	0.55±0.10	0.30±0.1	0.25±0.15

Recommended Land Pattern

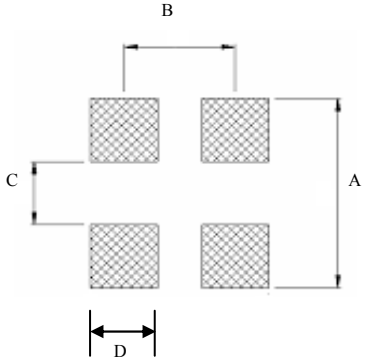

Schematic

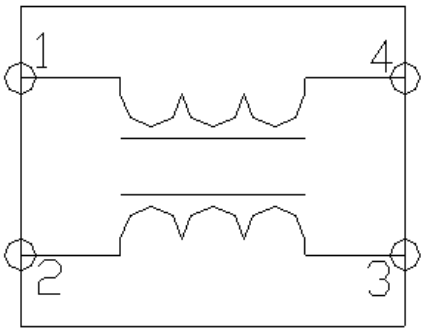

A	B	C	D
1.8	0.55	0.6	0.3

Dimension: mm

REFLOW PROFILE:

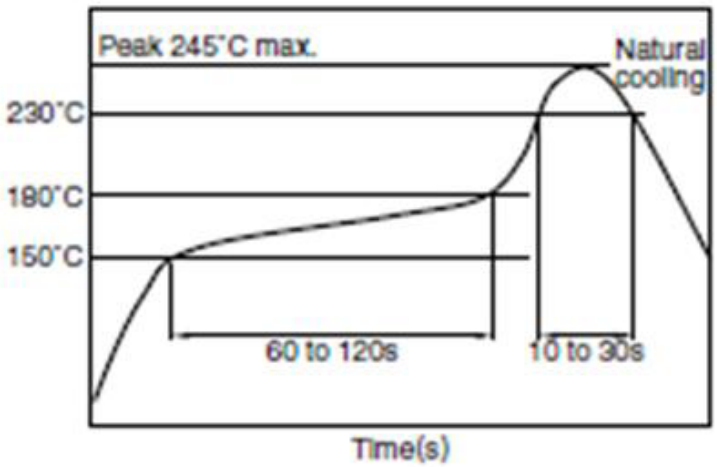

Thin Film Common Mode Filter

ACMF-04

RoHS/RoHS II Compliant

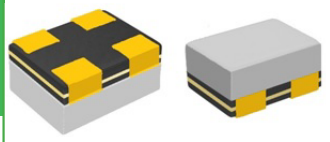

1.25 x 1.00 x 0.50mm

TAPE & REEL:

T= tape and reel (4,000pcs/reel)

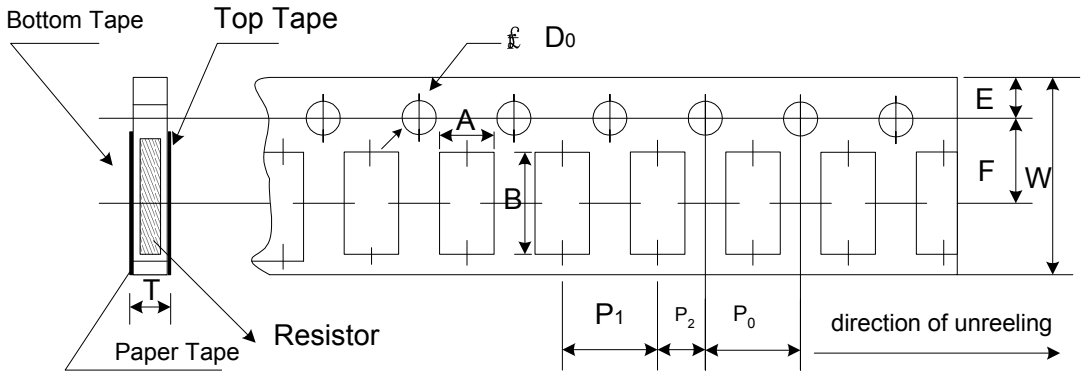

A	B	W	E	F	P0	P1	P2	ØD0	T
1.26±0.03	1.43±0.03	8.00±0.10	1.75±0.05	3.5±0.05	4.00±0.10	4.00±0.10	2.00±0.05	1.55±0.05	0.74±0.03

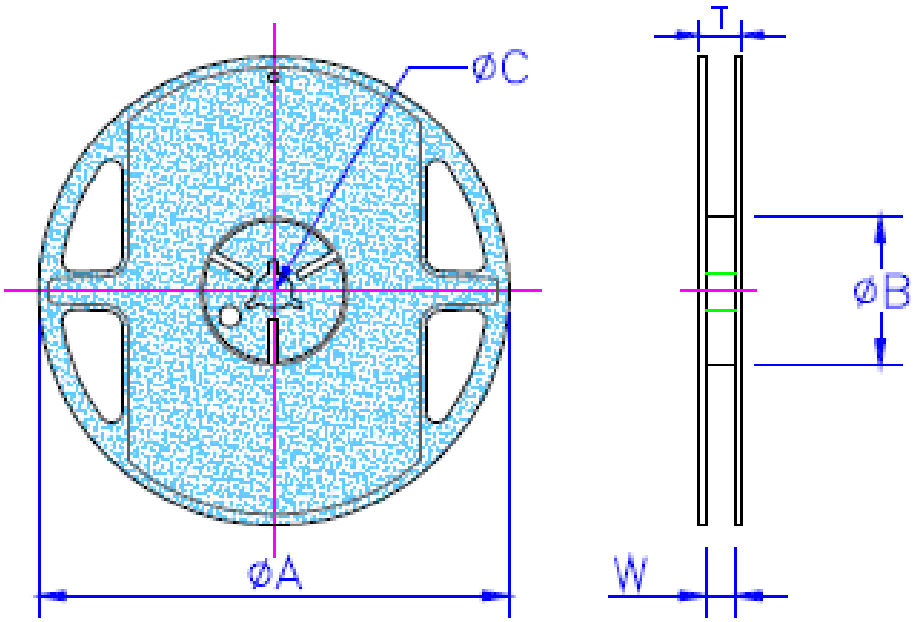

ØA	ØB	ØC	W	T
178.0±1.0	60.0+1.0	13.5±0.7	9.5±1.0	11.5±1.0

Dimension: mm

ATTENTION: Abracon Corporation's products are COTS – Commercial-Off-The-Shelf products; suitable for Commercial, Industrial and, where designated, Automotive Applications. Abracon's products are not specifically designed for Military, Aviation, Aerospace, Life-dependant Medical applications or any application requiring high reliability where component failure could result in loss of life and/or property. For applications requiring high reliability and/or presenting an extreme operating environment, written consent and authorization from Abracon Corporation is required. Please contact Abracon Corporation for more information.

30332 Esperanza, Rancho Santa Margarita, California 9268
tel 949-546-8000 | fax 949-546-8001 | www.abracon.com