Chip Wire Wound Common Mode Choke

ACM-31



3.2 x 1.6 x 1.8mm

Pb RoHS Compliant

FEATURES:

- Small size with ferrite base
- Two line type wire wound
- High common-mode impedance at noise band and low differential-mode impedance at signal band
- Suitable for high-speed signal.

APPLICATIONS:

- EMI and Noise Suppression
- USB Line Filter for Personal Computers and Peripheral
- IEEE 1394 Line for Personal Computers, DVC, STB
- Low-Voltage Differential Signal (LVDS) for LCD panels

STANDARD SPECIFICATIONS

Abracon P/N:	ACM-31
Operating Temperature & Humidity:	-40˚C to +85˚C
Storage Temperature & Humidity:	22˚C to 28˚C, Humidity < 80%RH (In tape and reel)

Part Number	Z	DCR	IDC	Rated Voltage	Withstanding Voltage	Insulation Resistance
Units	Ω ± 20%	Ω (max.)	mA	Vdc	Vdc	MΩ (min.)
ACM-31-900	90	0.30	370	50	125	10
ACM-31-121	120	0.30	370	50	125	10
ACM-31-161	160	0.40	340	50	125	10
ACM-31-261	260	0.50	310	50	125	10
ACM-31-601	600	0.80	260	50	125	10
ACM-31-102	1000	1.00	230	50	125	10
ACM-31-222	2200	1.20	200	50	125	10

Test Conditions
Impedance: LCR Meter HP 4291B, 100MHz
DCR: Micro-Ohm meter (GOM-801G)
Withstand Voltage (VDC): 125Vdc, 60 sec, 0.5mA
Rated Voltage (VDC): 50Vdc, 1 – 5 sec
Insulation Resistance (I.R): 1mA, 1 min

PART IDENTIFICATION:

ACM-31 - [ ] M - [ ]

Impedance Code	Packaging
Please refer to the table above	Blank: bulk T: Tape and Reel (2k pcs/reel)

30332 Esperanza, Rancho Santa Margarita, California 92688
tel 949-546-8000 | fax 949-546-8001 | www.abracon.com

Chip Wire Wound Common Mode Choke

ACM-31



3.2 x 1.6 x 1.8mm

Pb RoHS Compliant

CHARACTERISTIC CURVE:

ACM-31-900

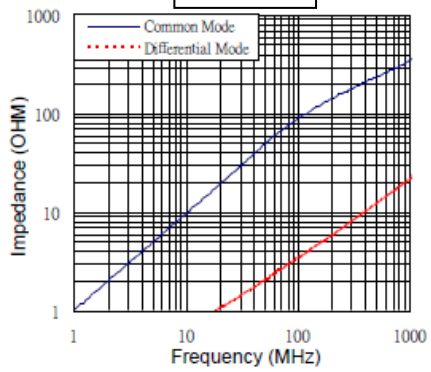

ACM-31-121

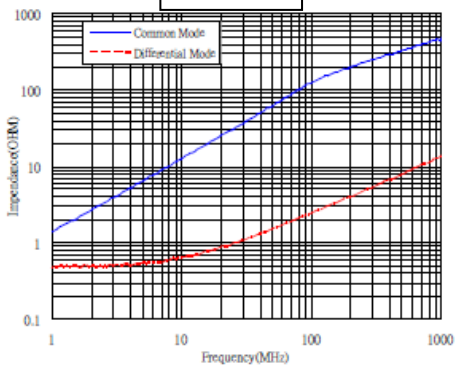

ACM-31-161

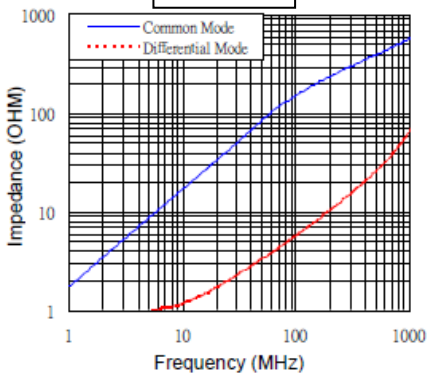

ACM-31-261

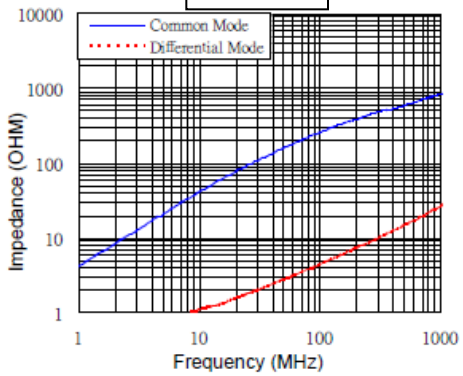

ACM-31-601

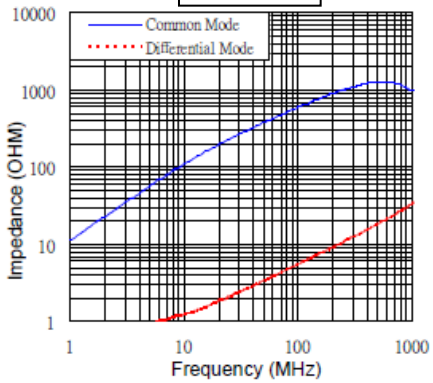

ACM-31-102

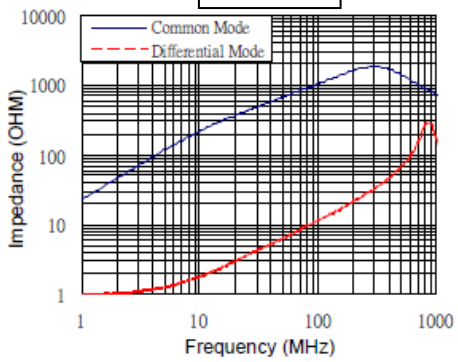

ACM-31-222

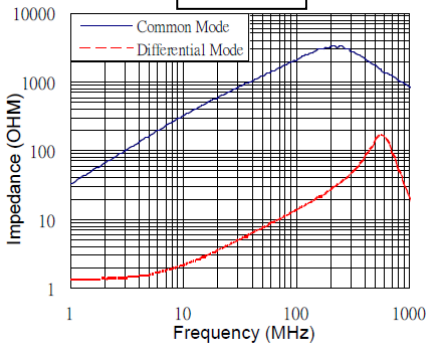

30332 Esperanza, Rancho Santa Margarita, California 92688
tel 949-546-8000 | fax 949-546-8001 | www.abracon.com

Chip Wire Wound Common Mode Choke

ACM-31

RoHS Compliant



3.2 x 1.6 x 1.8mm

OUTLINE DIMENSIONS:

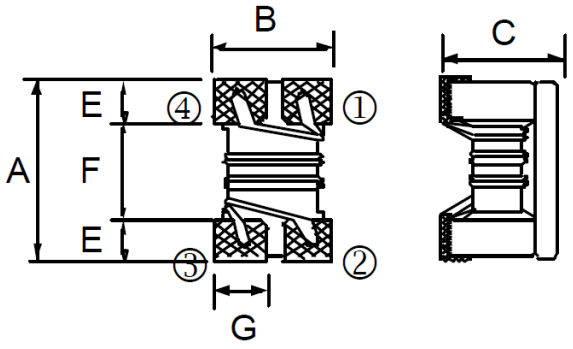

Recommended Land Pattern

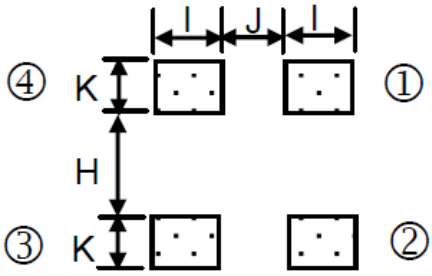

A	B	C	E	F	G
3.0±0.2	1.6±0.2	1.8±0.2	0.60	2.0	0.6

H	I	J	K
1.6	0.6	0.4	1.05

Schematic

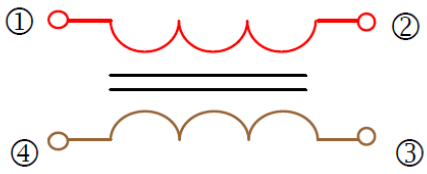

Dimension: mm

REFLOW PROFILE:

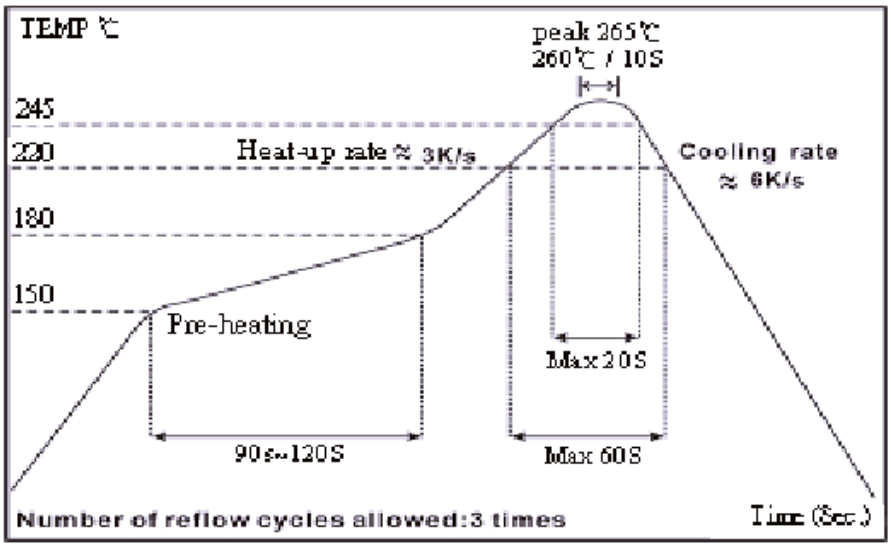

30332 Esperanza, Rancho Santa Margarita, California 92688
tel 949-546-8000 | fax 949-546-8001 | www.abracon.com

Chip Wire Wound Common Mode Choke

ACM-31

RoHS Compliant



3.2 x 1.6 x 1.8mm

TAPE & REEL: 2000pcs/reel

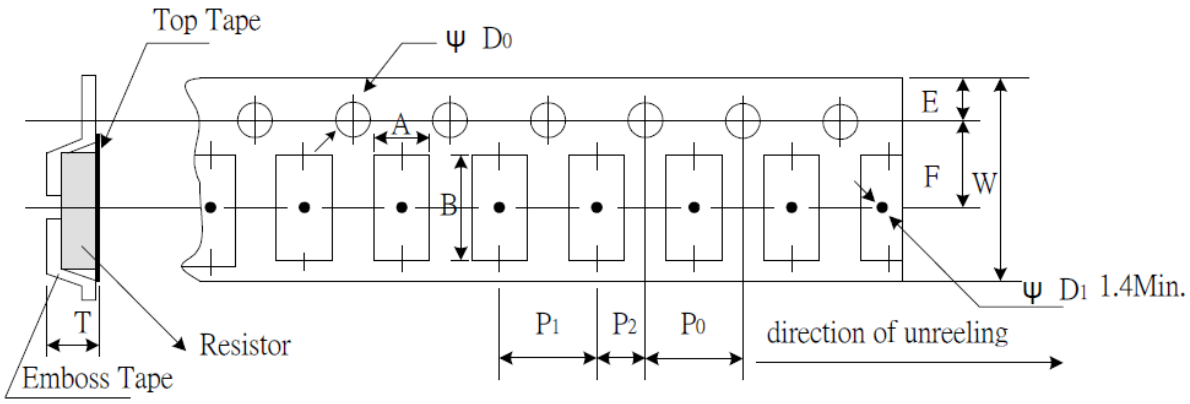

A	B	W	E	F	P0	P1	P2	ΦD0	t
1.90±0.10	3.50±0.05	8.0±0.20	1.75±0.10	3.5±0.10	4.00±0.10	4.00±0.10	2.00±0.10	1.50+0.10	2.10±0.10

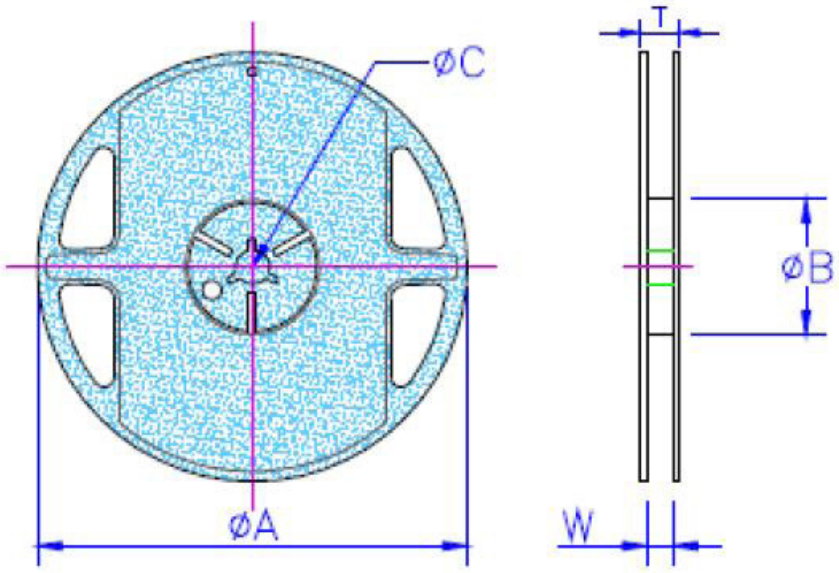

ΦA	ΦB	ΦC	W	T
178±2.0	60±0.5	13±0.3	9+0.3	11.4±1.0

Dimension: mm

ATTENTION: Abracon Corporation's products are COTS – Commercial-Off-The-Shelf products; suitable for Commercial, Industrial and, where designated, Automotive Applications. Abracon's products are not specifically designed for Military, Aviation, Aerospace, Life-dependant Medical applications or any application requiring high reliability where component failure could result in loss of life and/or property. For applications requiring high reliability and/or presenting an extreme operating environment, written consent and authorization from Abracon Corporation is required. Please contact Abracon Corporation for more information.

30332 Esperanza, Rancho Santa Margarita, California 92688
tel 949-546-8000 | fax 949-546-8001 | www.abracon.com