ACE73205F

PWM Step-down DC-DC Controller IC

Description

The ACE73205F is a switch-mode PWM step-down DC-DC controller using few external components. It achieves 5A continuous output current over a wide input supply range with excellent load and line regulation. The output voltage is internally set at 5V.

The high switching frequency of 550KHz allows tiny external components to be usable. The ACE73205F is designed to be stable with ceramic output capacitor. Pulse skipping mode is adopted under light load for high efficiency. Furthermore, the low operating current and low dropout operation make the ACE73205F is suitable for battery powered systems.

Fault protection includes cycle-by-cycle current limit, short output protection and output overvoltage protection. In shutdown mode, the ACE73205F draws only 7.5μA(VCC=15V) of supply current. On-chip soft-start minimizes the inrush supply current and the output overshoot at initial startup.

The ACE73205F is available in a space-saving 8-pin SOP package.

Features

- Wide Input Voltage: 4.8V to 32V
- Operating with an External P-Channel MOSFET
- Output Current Up to 5A
- Fixed Switching Frequency: 550KHz
- Fixed Output Voltage with 1% Accuracy
- Efficiency up to 95%
- Low Drop-Out Mode
- Stable with Low-ESR Output Ceramic Capacitor
- On-Chip Power-On Delay to Debounce Input Supply
- Cycle-by-Cycle Current Limit
- Overvoltage protection
- Frequency Foldback for Output Short Circuit Protection
- Built-in Soft Start
- High Efficiency at Light Load with Pulse Skipping Mode
- Shutdown Current: 7.5uA typical at 15V
- Operating Ambient Temperature -40℃ to 85℃

Application

- Car Charger
- Set-Top Box, Modems
- Pre-regulator
- Distributed Power Systems
- Battery Chargers

Absolute Maximum Ratings

Parameter	Value
Voltage from VCC, VG, SW, DRV, to GND	-0.3V to 36V
Voltage from VG to VCC	-8V to 0.3V
Voltage from OUT, SHDN and COM to GND	-0.3V to 6.5V
Storage Temperature	-65°C to 150°C
Operating Ambient Temperature	-40°C to 85°C
Lead Temperature (Soldering, 10 seconds)	260℃

Stresses beyond those listed under 'Absolute Maximum Ratings' may cause permanent damage to the device. These are stress ratings only and functional operation of the device at these or any other conditions above those indicated in the operational sections of the specifications is not implied. Exposure to Absolute Maximum Rating Conditions for extended periods may affect device reliability.

Ordering Information

ACE73205F XX + H

- Halogen - free
- Pb - free
- FM: SOP-8

Typical Applications

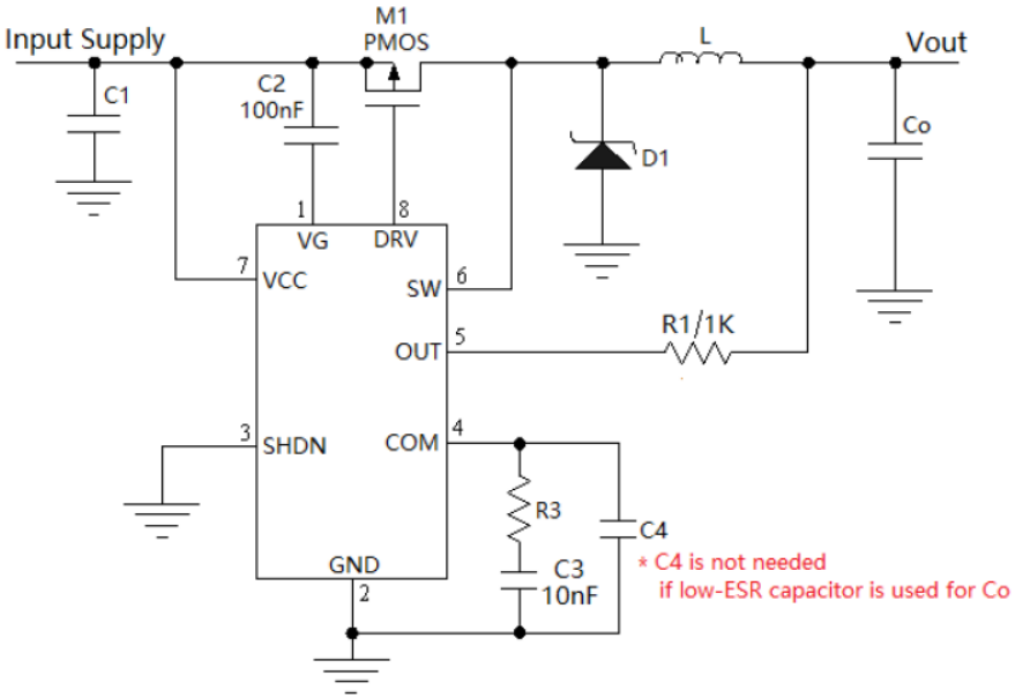

C2 is 100nF (0603)

C3 is 10nF (0603)

R1 is 1K ohm (0603 or 0402)

Please refer to section of Application Information for the selection of the other components

Notes

ACE does not assume any responsibility for use as critical components in life support devices or systems without the express written approval of the president and general counsel of ACE Technology Co., LTD. As sued herein:

1. Life support devices or systems are devices or systems which, (a) are intended for surgical implant into the body, or (b) support or sustain life, and shoes failure to perform when properly used in accordance with instructions for use provided in the labeling, can be reasonably expected to result in a significant injury to the user.
2. A critical component is any component of a life support device or system whose failure to perform can be reasonably expected to cause the failure of the life support device or system, or to affect its safety or effectiveness.