ACE432A

Precision adjustable shunt voltage reference

Description

The ACE432 series ICs are low voltage three-terminal adjustable regulators with guaranteed thermal stability over a full operation range. These ICs feature sharp turn-on characteristics, low temperature coefficient and low output impedance, which make them ideal substitutes for Zener diodes in applications such as switching power supply, charger, motherboard and other adjustable regulators.

The output voltage can be set to any value between 1.24V and 18V with two external resistors.

The ACE432 precision reference is offered in two voltage tolerance: 0.5% and 1.0%.

These ICs are available SOT-23-3.

Features

- Wide Programmable Precise Output Voltage from 1.24V to 18V
- High Stability under Capacitive Load
- Low Temperature Deviation: 3mV Typical
- Low Equivalent Full-range Temperature Coefficient: 20PPM/℃ Typical
- Low Dynamic Output Resistance: 0.05Ω Typical
- High Sink Current Capacity from 0.1mA to 100mA
- Low Output Noise
- Wide Operating Range of -40 to 125℃

Application

- Graphic Card
- PC Motherboard
- Voltage Adapter
- Switching Power Supply
- Charger

Absolute Maximum Ratings

Parameter	Symbol	Max	Unit
Cathode to Anode Voltage (Note 2)	V_{KA}	20	V
Cathode Current Range (Continuous)	I_{KA}	-100 to 100	mA
Reference Input Current Range	I_{REF}	10	mA
Power Dissipation	P_D	370	mW
Junction Temperature	T_J	150	°C
Storage temperature range	T_{STG}	- 65 to 150	°C

Note 1: Stresses greater than those listed under “Absolute Maximum Ratings” may cause permanent damage to the device. These are stress ratings only, and functional operation of the device at these or any other conditions beyond those indicated under “Recommended Operating Conditions” is not implied. Exposure to “Absolute Maximum Ratings” for extended periods may affect device reliability.

Packaging Type

SOT-23-3

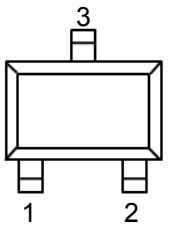

Pin	SOT-23
Cathode	2
Anode	3
Ref	1

Ordering information

Selection Guide

ACE432 X XX E + H

- Halogen - free
- Pb - free
- Temperature Range : -40 to 125℃
- BM : SOT-23-3
- Reference Voltage accuracy :
  A : 0.5%
  B : 1%

Functional Block Diagram

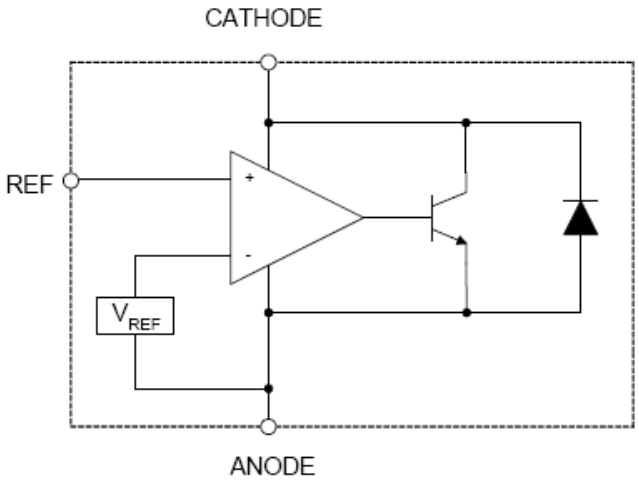

Figure 1. Functional Block Diagram of ACE432

Recommended Operating Conditions

Parameter	Symbol	Min	Max	Unit
Cathode Voltage	V_{KA}	V_{REF}	18	V
Cathode Current	I_{KA}	0.1	100	mA
Operating Ambient Temperature Range		-40	125	℃

Electrical Characteristics

Operating Conditions: T_A=25℃, unless otherwise note

Parameter		Symbol	Test Conditions		Min.	Typ.	Max.	Unit
Reference Voltage	0.5%	V_{REF}	$V_{KA}=V_{REF}$, I_{KA}=10mA		1.234	1.240	1.246	V
	1.0%				1.228	1.240	1.252	
Deviation of reference voltage over full temperature range		$\triangle V_{REF}$	$V_{KA}=V_{REF}$, I_{KA}=10mA	0 to 70℃		2	10	mV
				-40 to 85℃		3	10	
				-40 to 125℃		4	15	
Ratio of change in V_{REF} to the change in cathode voltage		$\Delta V_{REF}/\Delta_{KA}$	I_{KA}=10mA ΔV_{KA} : V_{REF} to 16V			-0.5	-1.5	mV/V
Reference Input current		I_{REF}	I_{KA}=10mA, R1=10KΩ, R2=∞			0.15	0.40	μA
Deviation of Reference current over full temperature range		$\triangle I_{REF}$	I_{KA}=10mA, R1=10KΩ, R2=∞T_A=-40℃ to 125℃			0.10	0.40	μA
Minimum cathode current for regulation		I_{KA} (Min)	$V_{KA}=V_{REF}$			55	80	μA
Off-state cathode current		I_{KA} (Off)	V_{REF}=0, V_{KA}=18V			0.04	0.10	μA
			V_{KA}=6, V_{REF}=0			0.01	0.05	
Dynamic impedance		Z_{KA}	I_{KA}=1 to 100mA $V_{KA}=V_{REF}$, f≦1kHz			0.05	0.15	Ω
Thermal Resistance		θ_{JC}	SOT-23			84.84		℃/W

Electrical Characteristics

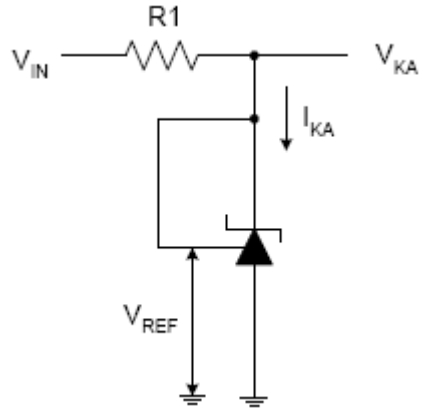

Figure 2. Test Circuit 4 for $V_{KA}=V_{REF}$

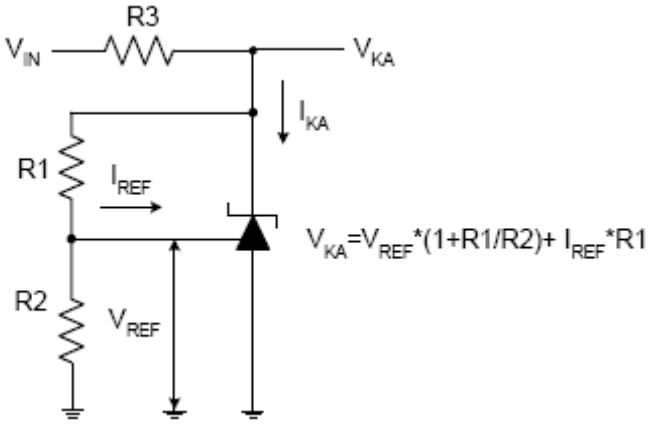

Figure 3. Test Circuit 5 for $V_{KA}>V_{REF}$

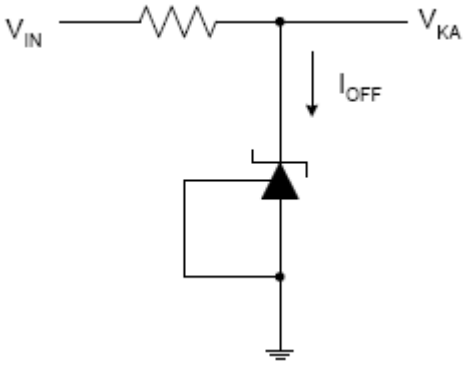

Figure 4. Test Circuit 6 for I_{OFF}

Typical Performance Characteristics

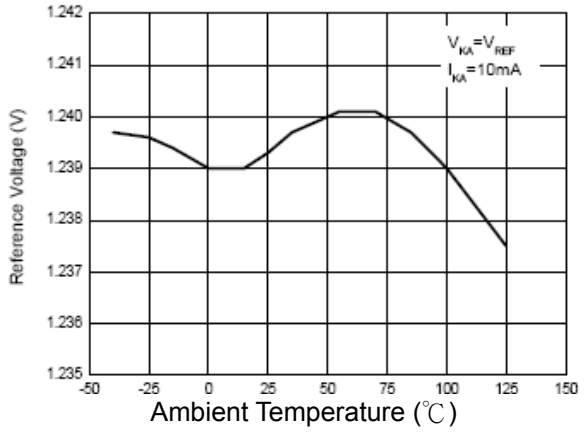

Figure 5. Reference Voltage vs. Ambient Temperature

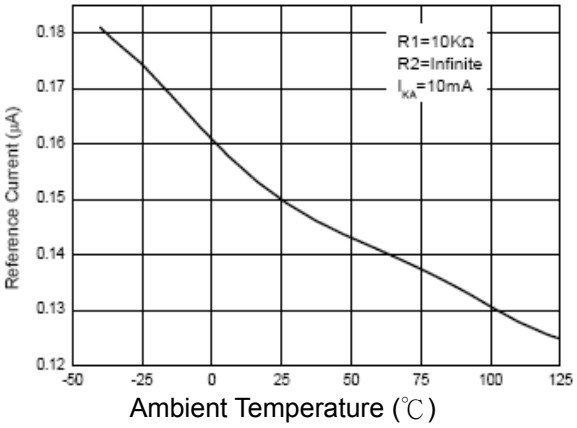

Figure 6. Reference Current vs. Ambient Temperature

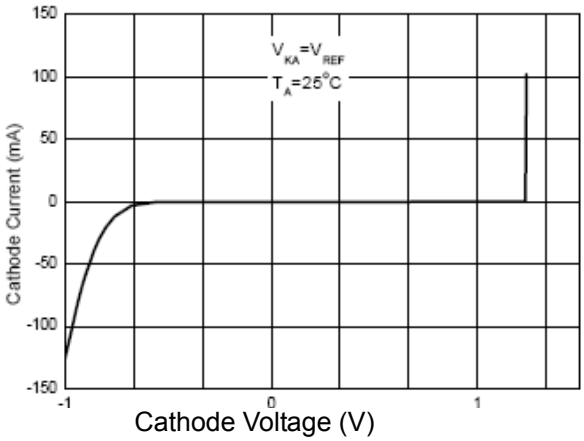

Figure 7. Cathode Current vs. Cathode Voltage

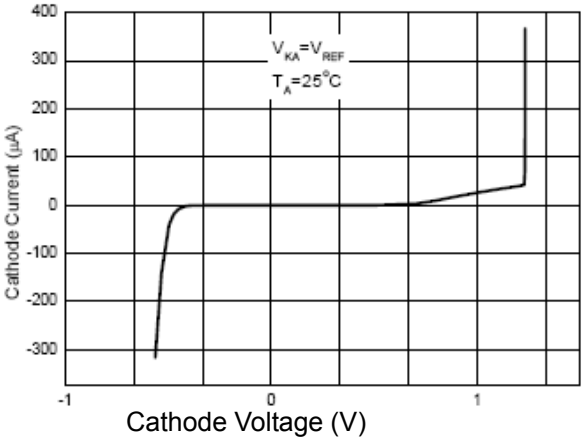

Figure 8. Cathode Current vs. Cathode Voltage

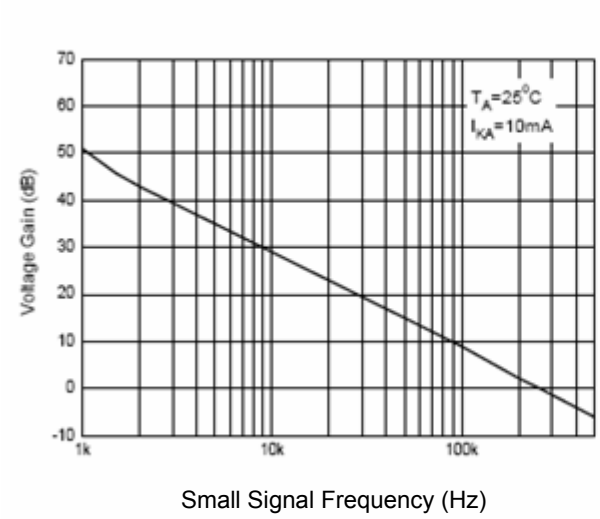

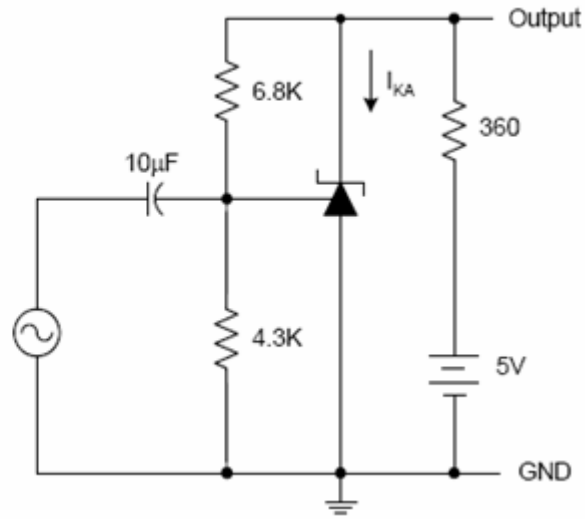

Figure 9. Small Signal Voltage Gain vs. Frequency

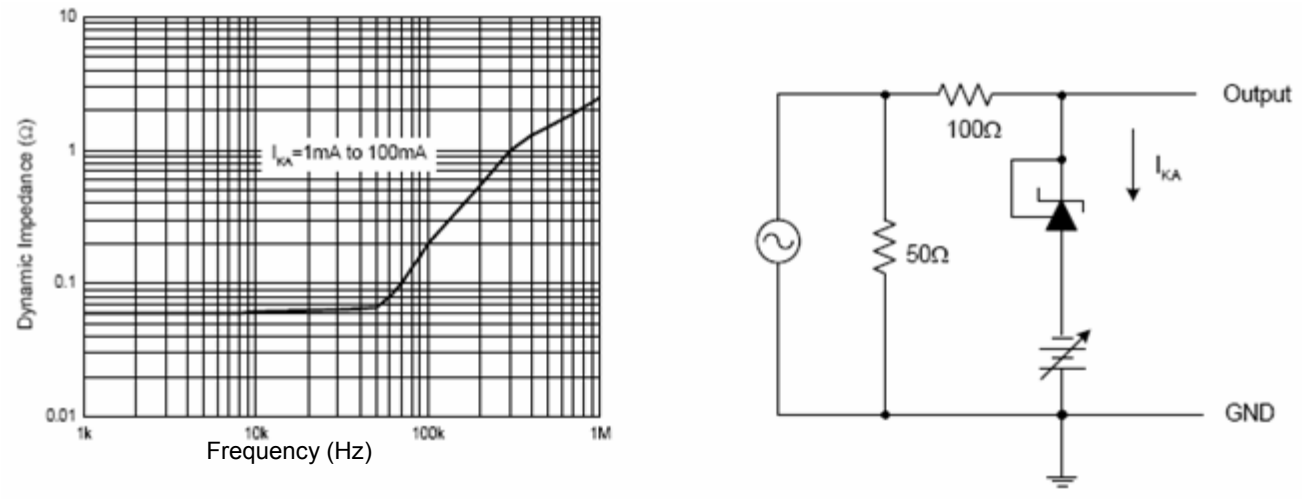

Figure 10. Dynamic Impedance vs. Frequency

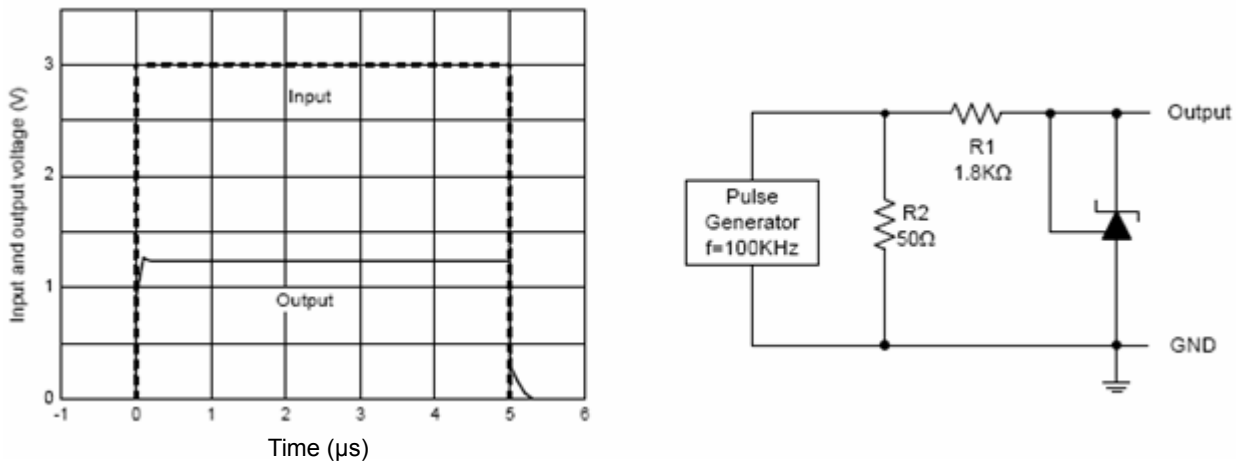

Figure 11. Pulse Response of Input and Output Voltage

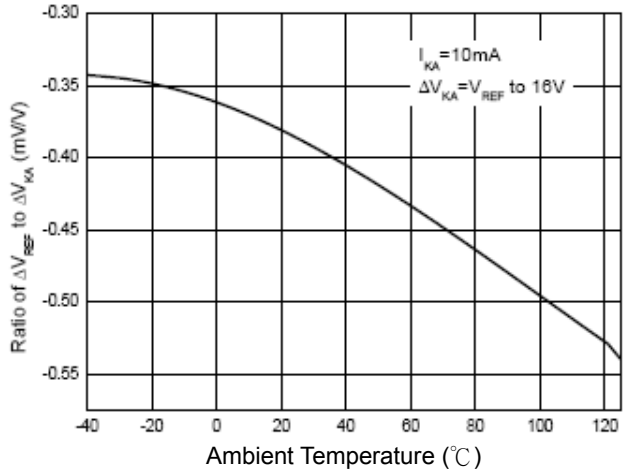

Figure 12. Ratio of Delta Reference Voltage to the Ratio of Cathode Voltage vs. Ambient Temperature

Typical Applications

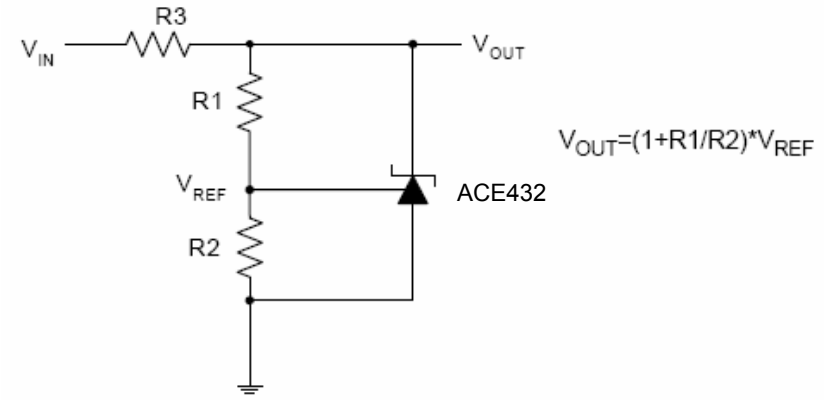

Figure 13. Shunt Regulator

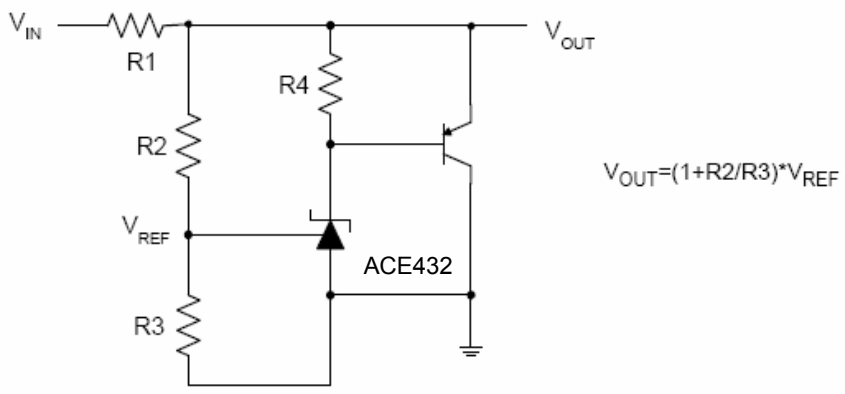

Figure 14. High Current Shunt Regulator

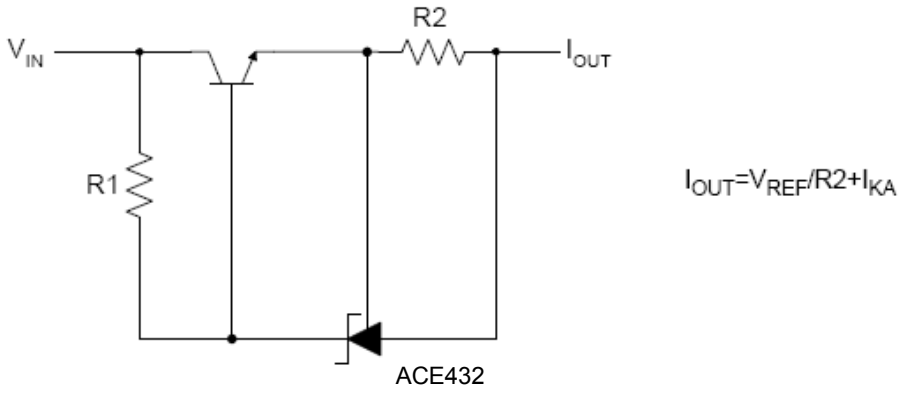

Figure 15. Current Source or Current Limit

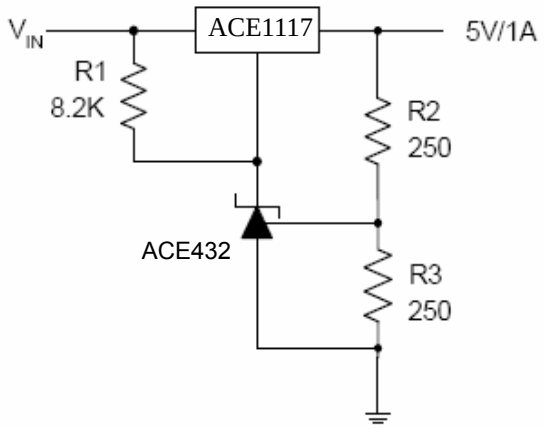

Figure 15. Current Source or Current Limit

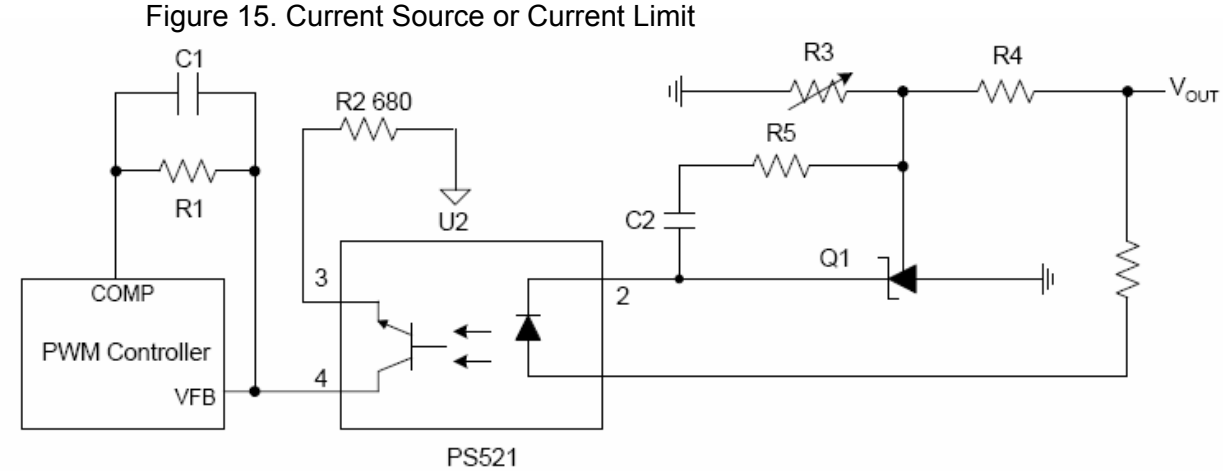

Figure 17. PWM Converter with Reference

Packing Information

SOT-23-3

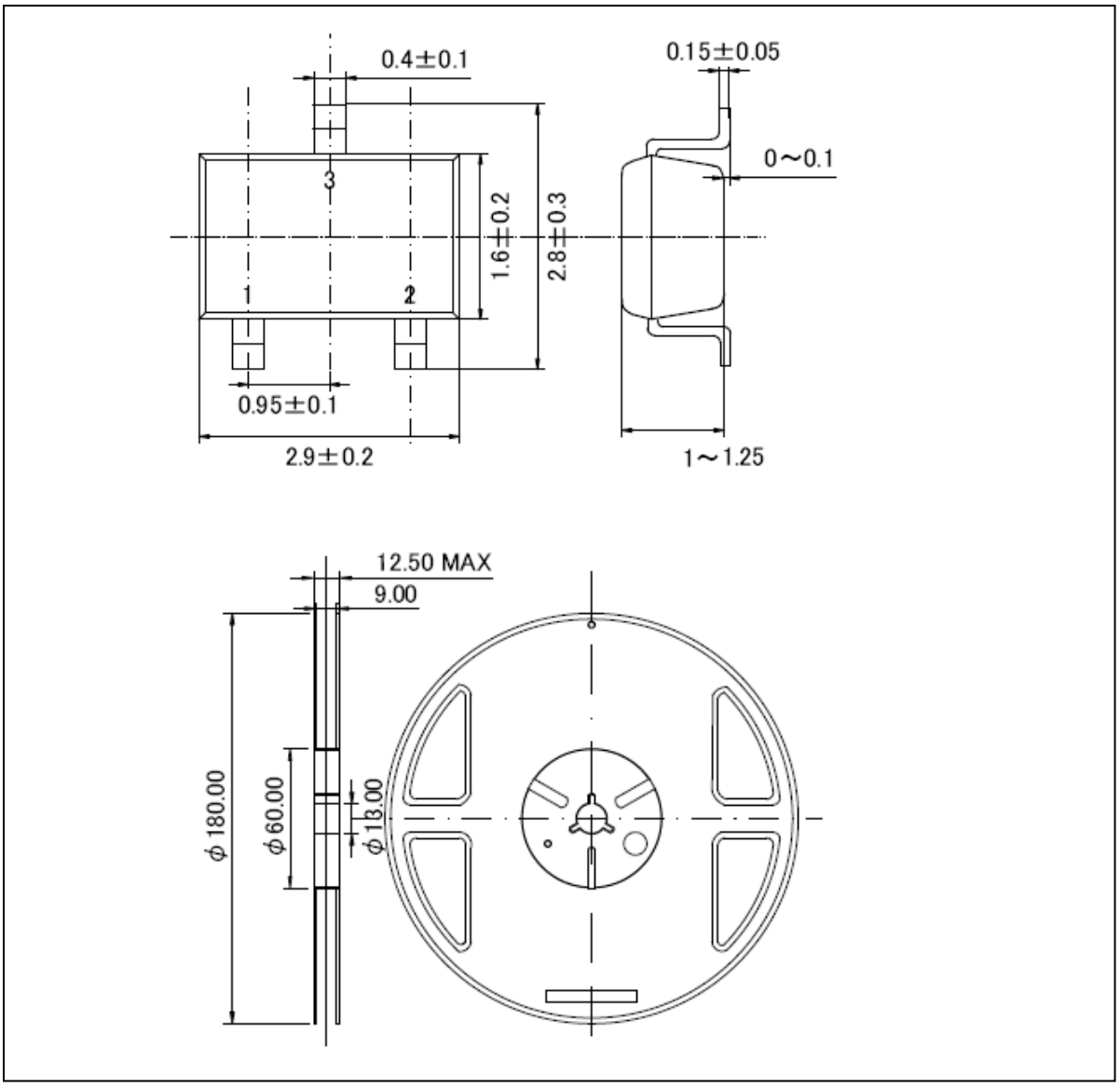

Notes

ACE does not assume any responsibility for use as critical components in life support devices or systems without the express written approval of the president and general counsel of ACE Electronics Co., LTD. As sued herein:

1. Life support devices or systems are devices or systems which, (a) are intended for surgical implant into the body, or (b) support or sustain life, and shoes failure to perform when properly used in accordance with instructions for use provided in the labeling, can be reasonably expected to result in a significant injury to the user.
2. A critical component is any component of a life support device or system whose failure to perform can be reasonably expected to cause the failure of the life support device or system, or to affect its safety or effectiveness.

ACE Technology Co., LTD.
http://www.ace-ele.com/