Mallory Sonalert Products Inc.	Part # ACC03
Sonalert® Accessory Drawing	Revision B

Neoprene Gasket

Helps seal panel hole to achieve NEMA Type 3R, 4X, & 12 application requirements

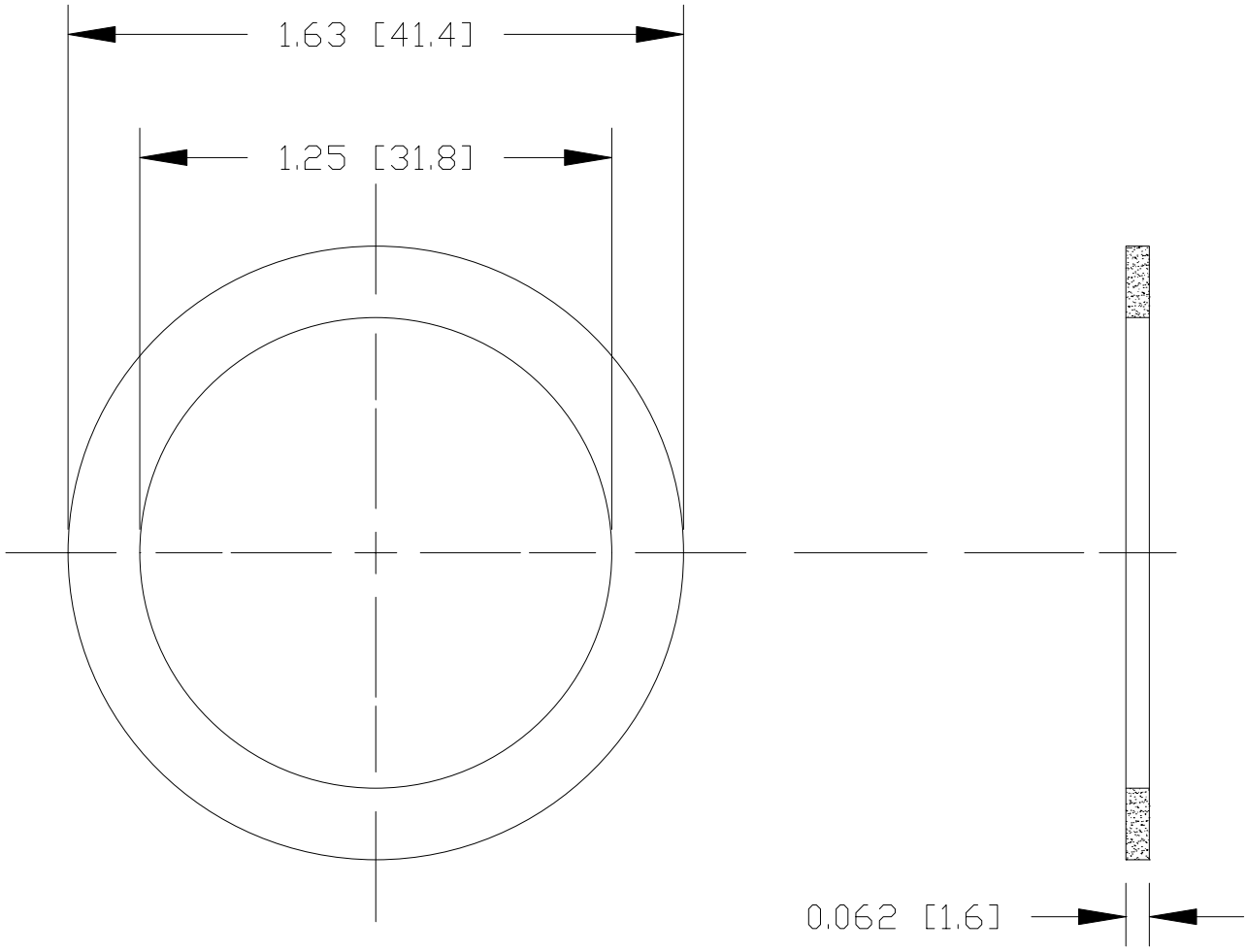

Assembly Procedure

Remove knurled nut and assemble ACC03 gasket onto threaded neck of classic Sonalert®. Place threaded neck through panel hole and secure with mounting nut. Hand tighten only.
Material: Neoprene/EPDM/SBR Economy Blend 4216-S.

UL50, C22.2 No.94, NEMA Type 3R, 4X, & 12, and IP66 approved, RoHS compliant, Gasket.

4411 South High School Road, Indianapolis, Indiana 46241 U.S.A • Phone: (317)612-1000 Fax: (317)612-1010 • www.mallory-sonalert.com