SPC TECHNOLOGY

ALL RIGHTS RESERVED. NO PORTION OF THIS PUBLICATION, WHETHER IN WHOLE OR IN PART CAN BE REPRODUCED WITHOUT THE EXPRESS WRITTEN CONSENT OF SPC TECHNOLOGY.

SPC-F005.DWG

REVISIONS

DOC. NO. SPC-F005 * Effective: 7/8/02 * DCP No: 1398

DCP #	REV	DESCRIPTION	DRAWN	DATE	CHECKD	DATE	APPRVD	DATE
811	C	Renamed-was ACC-*	JWM	8/16/01	JC	9/11/01	JC	9/11/01
1865	D	RoHS ADDED	DCM	10/17/05	JWM	10/18/05	JWM	10/18/05

RoHS Compliant

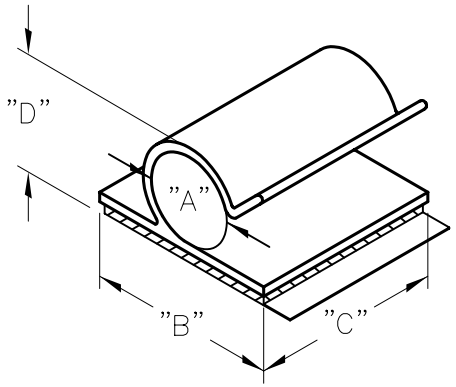

PART NO.	HOLDING CAPACITY "A"	"B" ±.015 (0.4)	"C" ±.02 (0.5)/IN.	"D" TYP.
ACC-1	1/8 (3.2)	3/4 (19.1)	3/4 (19.1)	5/16 (7.9)
ACC-2	1/4 (6.4)			3/8 (9.5)
ACC-3	3/8 (9.5)			1/2 (12.7)
ACC-4	1/2 (12.7)	1 (25.4)	1 (25.4)	5/8 (15.9)
ACC-6	3/4 (19.1)			7/8 (22.2)

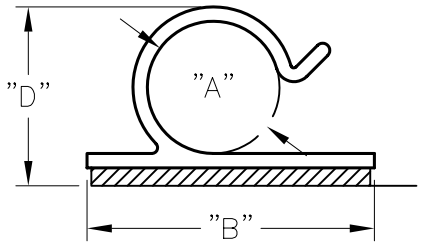

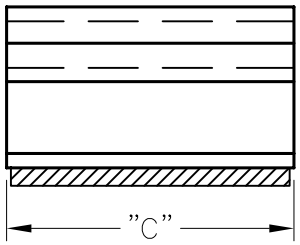

NOTES:

1. MATERIAL: PVC
2. COLOR: GRAY
3. FLAMMABILITY: UL94V-0
4. MOUNTS WITH DOUBLE ADHESIVE TAPE.
   SEE TECH NOTE #TN-003
5. FRACTIONAL TOLERANCE = ±1/64

DISCLAIMER:
ALL STATEMENTS AND TECHNICAL INFORMATION CONTAINED HEREIN ARE BASED UPON INFORMATION AND/OR TESTS WE BELIEVE TO BE ACCURATE AND RELIABLE. SINCE CONDITIONS OF USE ARE BEYOND OUR CONTROL, THE USER SHALL DETERMINE THE SUITABILITY OF THE PRODUCT FOR THE INTENDED USE AND ASSUME ALL RISK AND LIABILITY WHATSOEVER IN CONNECTION THEREWITH.

TOLERANCES:
UNLESS OTHERWISE SPECIFIED, DIMENSIONS ARE FOR REFERENCE PURPOSES ONLY.

DRAWN BY:	DATE:
JAP	12/6/94
CHECKED BY:	DATE:
JC	12/9/94
APPROVED BY:	DATE:
KD	12/9/94

DRAWING TITLE: Cable Clips

SIZE	DWG. NO.	ELECTRONIC FILE	REV
A	TA-388	TA-388.dwg	D

SCALE: NTS | U.O.M.: INCHES [mm] | SHEET: 1 OF 1