AC1040 • 40 Amp Current Transformer

Low Cost 50/60Hz Current Transformers

Applications

- Sensing Overload Current
- Ground fault detection
- Metering
- Analog to Digital Circuits

- Competitive pricing due to high volume production
- Manufactured in an ISO-9001:2000, TS-16949:2002 and ISO-14001:2004 certified Talema facility
- Fully RoHS compliant



Electrical Specifications @ 20°C ambient

Electrical Specifications	
Primary Current	40A nom., 125A max.
Turns Ratio	1000:1 nominal
Volt per Amp Ratio at 40A for 100 ohm load	0.100 V/A
Volt per Amp Ratio at 4A for 100 ohm load	0.098 V/A
DC Resistance at 20°C	49.3 ohms
Dielectric Withstanding Voltage (Hi-pot)	4KVrms

Mechanical Specifications	
Case	Polycarbonate
Encapsulant	Epoxy
Flammibility	Conforms to UL94-VO
Terminals	Pins Ø 1.0mm
Marking	TALEMA Date Code (W/Y) AC1040, Dot at start pin
Approximate Weight	47.3 grams
Tolerance	±0.2mm

Environmental Specifications	
Storage Temperature	-55° to +130°C
Insulation Resistance	100 megohms min.

Output Volts vs Input Current
For various ohmic loads

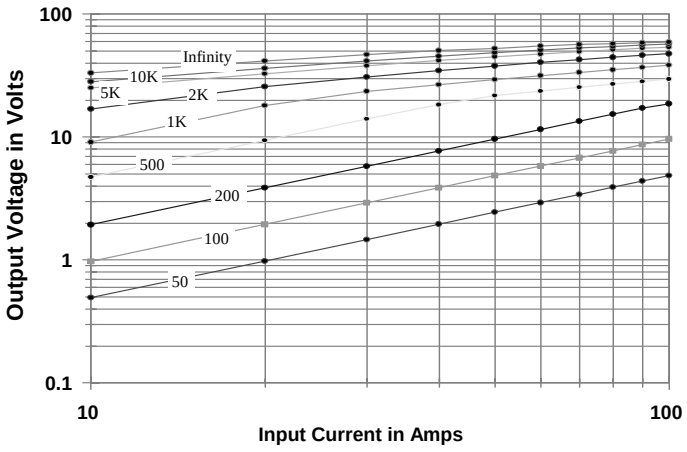

%RE vs RL at Rated primary current
(AC1040)

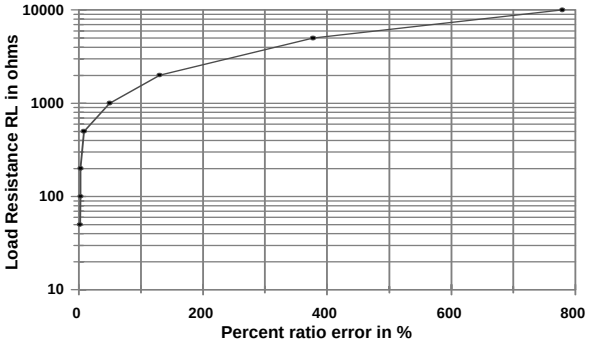

Typical Excitation Curve
(AC1040~AC1050)

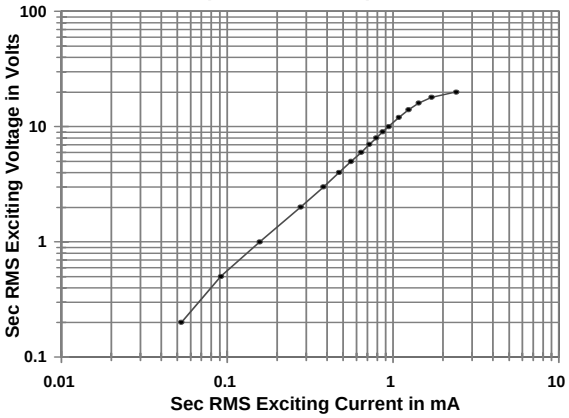

Dimensions

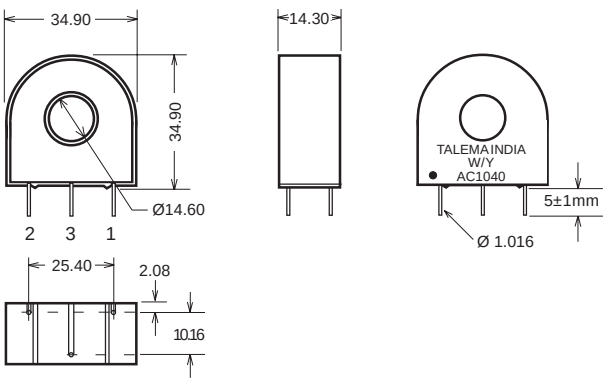

Notes:

1) Unless requested, the terminating resistor and the one-turn primary are not supplied
2) Pin 3: Normally for mechanical support only but will be used on center tapped designs

