NEW PRODUCT

ABS10B

1.5A SURFACE MOUNT GLASS PASSIVATED BRIDGE RECTIFIER

Product Summary (@T_A = +25°C)

V_{RRM} (V)	I_O (A)	V_F (V)	I_R (µA)
1000	1.5	1.1	5

Features and Benefits

- Glass Passivated Die Construction
- Miniature Package Saves Space on PC Boards
- High Current Capability
- Ideal for SMT Manufacturing
- Low Forward Voltage Drop
- **Lead-Free Finish; RoHS Compliant (Notes 1 & 2)**
- **Halogen and Antimony Free. "Green" Device (Note 3)**

Description and Applications

Suitable for AC to DC bridge full wave rectification for SMPS, LED lighting, adapter, battery charger, home appliances, office equipment, and telecommunication applications.

Mechanical Data

- Case: SOPA-4
- Case Material: Molded Plastic. UL Flammability Classification Rating 94V-0
- Moisture Sensitivity: Level 1 per J-STD-020
- Terminals: Lead Free Plating (Matte Tin Finish). Solderable per MIL-STD-202, Method 208 e3
- Polarity: As Marked on Body
- Weight: 0.10 grams (Approximate)



Top View

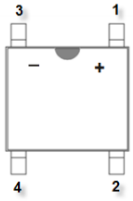

Pin Diagram

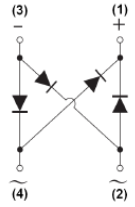

Internal Schematic

Ordering Information (Note 4)

Part Number	Compliance	Case	Packaging
ABS10B-13	Commercial	SOPA-4	5,000/Tape & Reel

Notes:
1. EU Directive 2002/95/EC (RoHS) & 2011/65/EU (RoHS 2) compliant. All applicable RoHS exemptions applied.
2. See http://www.diodes.com/quality/lead_free.html for more information about Diodes Incorporated's definitions of Halogen- and Antimony-free, "Green" and Lead-free.
3. Halogen- and Antimony-free "Green" products are defined as those which contain <900ppm bromine, <900ppm chlorine (<1500ppm total Br + Cl) and <1000ppm antimony compounds.
4. For packaging details, go to our website at http://www.diodes.com/products/packages.html.

Marking Information

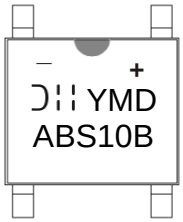

ABS10B = Product Type Marking Code
= Manufacturers' Code Marking
YMD = Date Code Marking
Y = Last Digit of Year (ex: 7 = 2017)
M = See Month/Code Table Below
D = Day 1 to 9 = 1 to 9; Day 10 to 31 = A to V

Month	Jan	Feb	Mar	Apr	May	Jun	Jul	Aug	Sep	Oct	Nov	Dec
Code	1	2	3	4	5	6	7	8	9	O	N	D

© Diodes Incorporated

NEW PRODUCT

Maximum Ratings (@T_A = +25°C, unless otherwise specified.)

Single phase, half wave, 60Hz, resistive or inductive load.
For capacitive load, derate current by 20%.

Characteristic	Symbol	Value	Unit
Peak Repetitive Reverse Voltage Working Peak Reverse Voltage DC Blocking Voltage	V_{RRM} V_{RWM} V_R	1000	V
RMS Reverse Voltage	$V_{R(RMS)}$	700	V
Average Rectified Output Current (Note 6) @ T_A = +40°C	I_O	1.5	A
Non-Repetitive Peak Forward Surge Current, 8.3ms Single Half Sine-Wave Superimposed on Rated Load	I_{FSM}	50	A
I^2t Rating for Fusing (1ms < t < 8.3ms)	I^2t	10.4	A^2S

Thermal Characteristics

Characteristic	Symbol	Value	Unit
Typical Thermal Resistance, Junction to Ambient (Note 6) (Per Element)	$R_{\theta JA}$	62.5	°C/W
Typical Thermal Resistance, Junction to Lead (Per Element)	$R_{\theta JL}$	25	°C/W
Operating and Storage Temperature Range	T_J, T_{STG}	-55 to +150	°C

Electrical Characteristics (@T_A = +25°C, unless otherwise specified.)

Characteristic	Symbol	Min	Typ	Max	Unit	Test Condition
Reverse Breakdown Voltage (Note 7)	$V_{(BR)R}$	1,000	—	—	V	I_R = 5μA
Forward Voltage (Per Element)	V_F	—	—	1.1	V	I_F = 1.5A, T_A = +25°C
Leakage Current (Note 7) (Per Element)	I_R	— —	— —	5 500	μA	V_R = 1,000V, T_A = +25°C V_R = 1,000V, T_A = +125°C
Total Capacitance (Per Element)	C_T	—	17	—	pF	V_R = 4V, f = 1.0MHz

Notes: 5. Device mounted on FR-4 substrate, 1"*1", 2oz, single-sided, PC boards with 0.15"*0.26" copper pad.
6. Device mounted on FR-4 substrate, 1"*1", 2oz, single-sided, PC boards with 0.56"*0.73" copper pad.
7. Short duration pulse test used to minimize self-heating effect.

© Diodes Incorporated

NEW PRODUCT

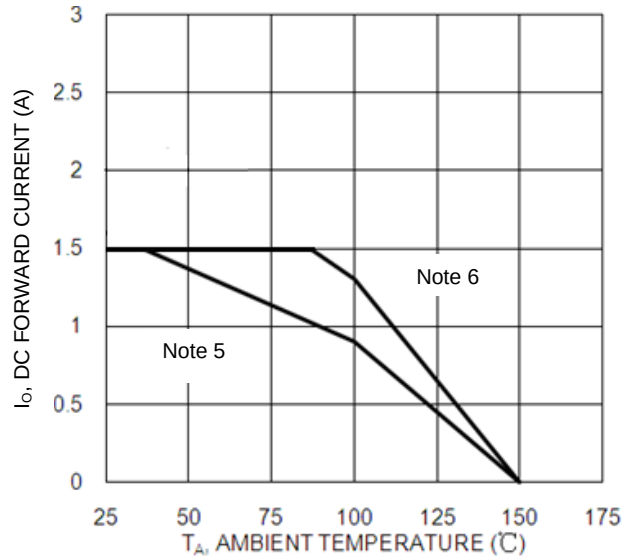

Figure 1. DC Forward Current Derating

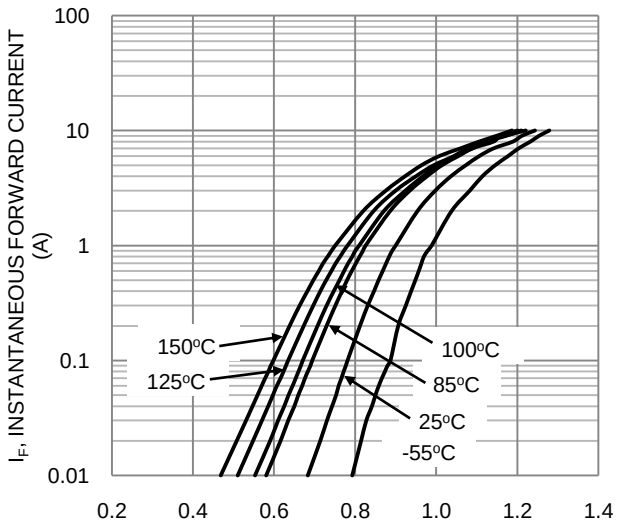

Figure 2. Typical Forward Characteristics (Per Leg)

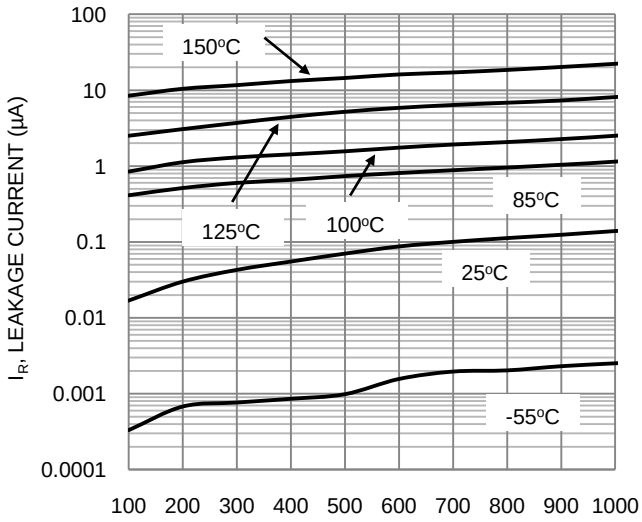

Figure 3. Typical Reverse Characteristics (Per Leg)

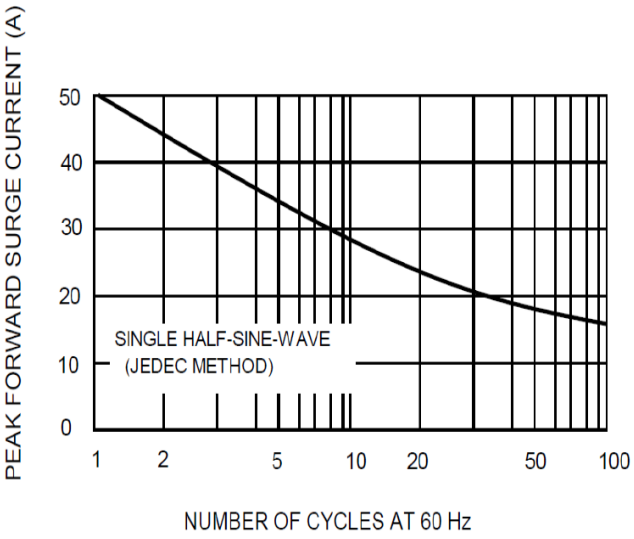

Figure 4. Maximum Non-Repetitive Surge Current

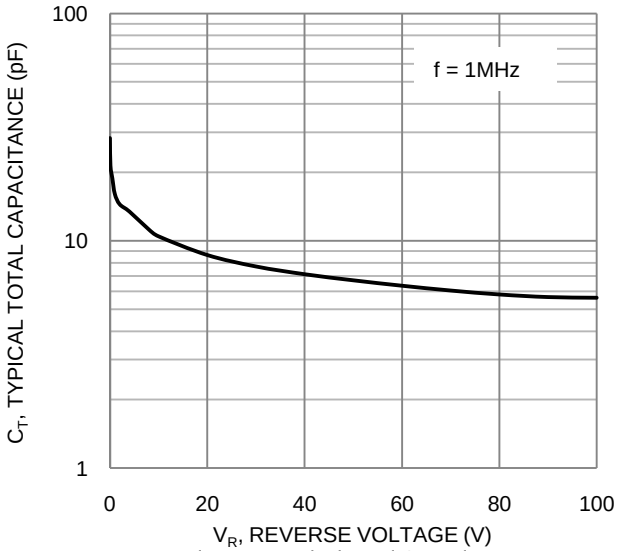

Figure 5. Typical Total Capacitance

© Diodes Incorporated

NEW PRODUCT

Package Outline Dimensions

Please see http://www.diodes.com/package-outlines.html for the latest version.

SOPA-4

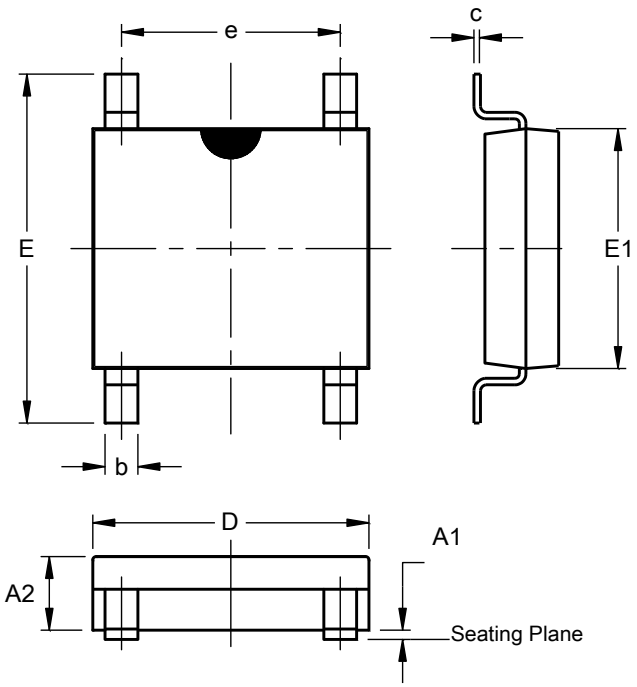

SOPA-4			
Dim	**Min**	**Max**	**Typ**
A1	--	0.20	--
A2	1.20	1.50	--
b	0.50	0.70	--
c	0.15	0.25	--
D	4.80	5.30	--
E	6.00	6.80	--
E1	4.20	4.60	--
e	3.80	4.20	--
All Dimensions in mm			

Suggested Pad Layout

Please see http://www.diodes.com/package-outlines.html for the latest version.

SOPA-4

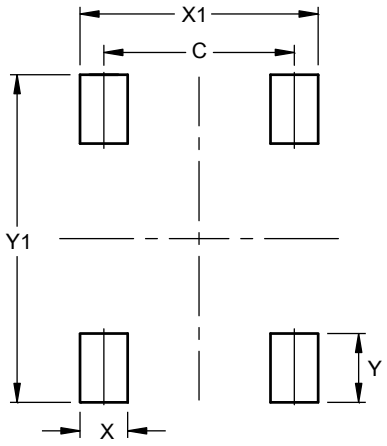

Dimensions	Value (in mm)
C	4.00
X	1.00
X1	5.00
Y	1.45
Y1	6.90

© Diodes Incorporated

NEW PRODUCT

IMPORTANT NOTICE

DIODES INCORPORATED MAKES NO WARRANTY OF ANY KIND, EXPRESS OR IMPLIED, WITH REGARDS TO THIS DOCUMENT, INCLUDING, BUT NOT LIMITED TO, THE IMPLIED WARRANTIES OF MERCHANTABILITY AND FITNESS FOR A PARTICULAR PURPOSE (AND THEIR EQUIVALENTS UNDER THE LAWS OF ANY JURISDICTION).

Diodes Incorporated and its subsidiaries reserve the right to make modifications, enhancements, improvements, corrections or other changes without further notice to this document and any product described herein. Diodes Incorporated does not assume any liability arising out of the application or use of this document or any product described herein; neither does Diodes Incorporated convey any license under its patent or trademark rights, nor the rights of others. Any Customer or user of this document or products described herein in such applications shall assume all risks of such use and will agree to hold Diodes Incorporated and all the companies whose products are represented on Diodes Incorporated website, harmless against all damages.

Diodes Incorporated does not warrant or accept any liability whatsoever in respect of any products purchased through unauthorized sales channel. Should Customers purchase or use Diodes Incorporated products for any unintended or unauthorized application, Customers shall indemnify and hold Diodes Incorporated and its representatives harmless against all claims, damages, expenses, and attorney fees arising out of, directly or indirectly, any claim of personal injury or death associated with such unintended or unauthorized application.

Products described herein may be covered by one or more United States, international or foreign patents pending. Product names and markings noted herein may also be covered by one or more United States, international or foreign trademarks.

This document is written in English but may be translated into multiple languages for reference. Only the English version of this document is the final and determinative format released by Diodes Incorporated.

LIFE SUPPORT

Diodes Incorporated products are specifically not authorized for use as critical components in life support devices or systems without the express written approval of the Chief Executive Officer of Diodes Incorporated. As used herein:

A. Life support devices or systems are devices or systems which:

1. are intended to implant into the body, or

2. support or sustain life and whose failure to perform when properly used in accordance with instructions for use provided in the labeling can be reasonably expected to result in significant injury to the user.

B. A critical component is any component in a life support device or system whose failure to perform can be reasonably expected to cause the failure of the life support device or to affect its safety or effectiveness.

Customers represent that they have all necessary expertise in the safety and regulatory ramifications of their life support devices or systems, and acknowledge and agree that they are solely responsible for all legal, regulatory and safety-related requirements concerning their products and any use of Diodes Incorporated products in such safety-critical, life support devices or systems, notwithstanding any devices- or systems-related information or support that may be provided by Diodes Incorporated. Further, Customers must fully indemnify Diodes Incorporated and its representatives against any damages arising out of the use of Diodes Incorporated products in such safety-critical, life support devices or systems.

Copyright © 2017, Diodes Incorporated

www.diodes.com