ABS05 THRU ABS10

Surface Mount Glass Passivated Bridge Rectifiers

Reverse Voltage - 50 to 1000 Volts

Forward Current - 0.8 Amperes

Features

- Glass passivated chip
- Ideal for automatic placement
- High surge forward current capability
- Reliable low cost construction utilizing molded plastic technique
- Lead tin plated copper
- Meet UL flammability classification 94V-0

Mechanical Data

- Polarity: Symbol marked on body
- Mounting position: Any

Note: Products with logo HY® or hy® are made by HY Electronic (Cayman) Limited.

Applications

- General purpose use in AC/DC bridge full wave rectification, for SMPS, lighting ballaster, adapter, etc.

ABS

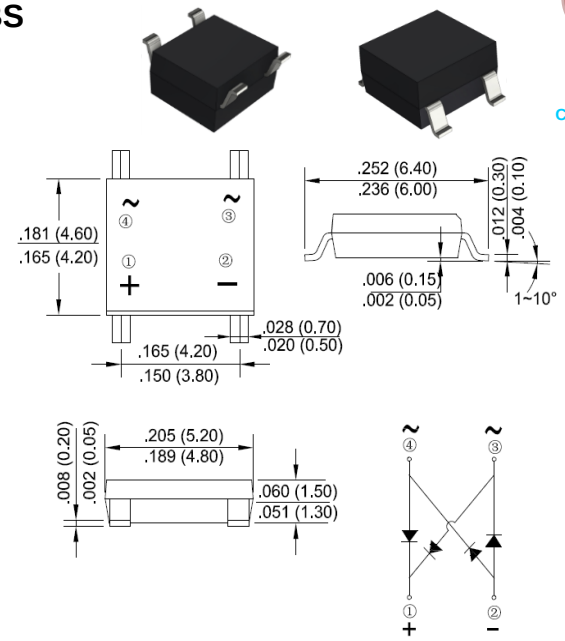

Package Outline Dimensions in Inches (Millimeters)

Maximum Ratings and Electrical Characteristics

Rating at 25℃ ambient temperature unless otherwise specified.

Single phase, half wave, 60Hz, resistive or inductive load.

For capacitive load, derate current by 20%.

Characteristics	Symbol	ABS05	ABS1	ABS2	ABS4	ABS6	ABS8	ABS10	Unit
Maximum Repetitive Peak Reverse Voltage	V_{RRM}	50	100	200	400	600	800	1000	V
Maximum RMS Voltage	V_{RMS}	35	70	140	280	420	560	700	V
Maximum DC Blocking Voltage	V_{DC}	50	100	200	400	600	800	1000	V
Maximum Average Forward Rectified Current @T_A=40 ℃ (Note1)	$I_{(AV)}$	0.8							A
Peak Forward Surge Current, 8.3mS Single Half Sine-Wave, Superimposed on Rated Load (JEDEC Method)	I_{FSM}	30							A
I^2t Rating for Fusing (t<8.3mS)	I^2t	3.7							A^2s
Peak Forward Voltage per Diode at 0.8A DC	V_F	1.05							V
Maximum DC Reverse Current at Rated @T_J=25℃	I_R	5							μA
DC Blocking Voltage per Diode @T_J=125℃		500							
Typical Thermal Resistance Junction to Ambient	$R_{\theta JA}$	80							℃/W
Operating Junction Temperature Range	T_J	-55 to +150							℃
Storage Temperature Range	T_{STG}	-55 to +150							℃

Notes: 1. Mounted on P.C. board.

2. The typical data above is for reference only .

Download from alldatasheet.com

Fig. 1 - Forward Current Derating Curve

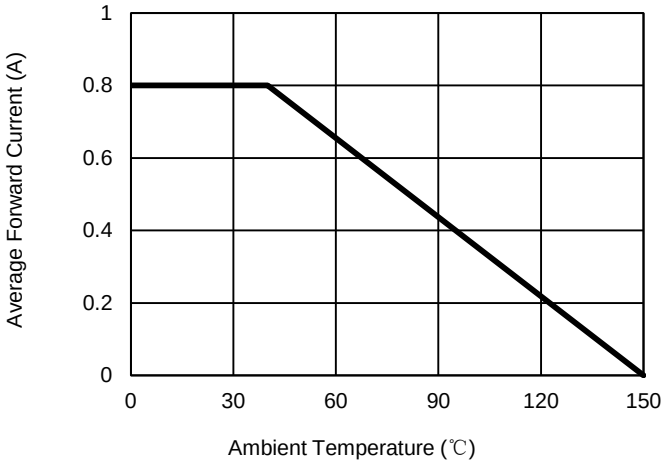

Fig. 2 - Maximum Non-Repetitive Surge Current

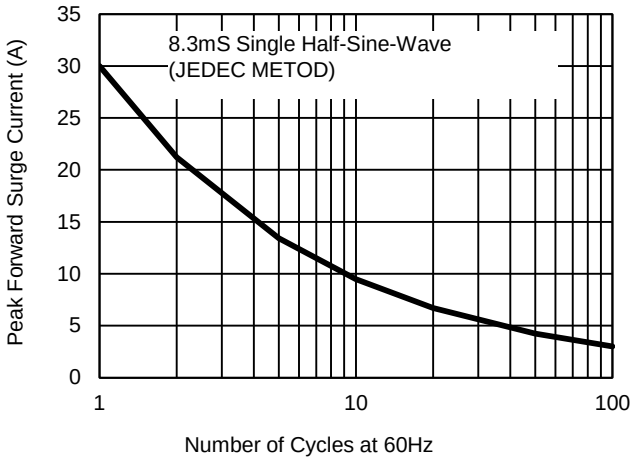

Fig. 3 - Typical Reverse Characteristics

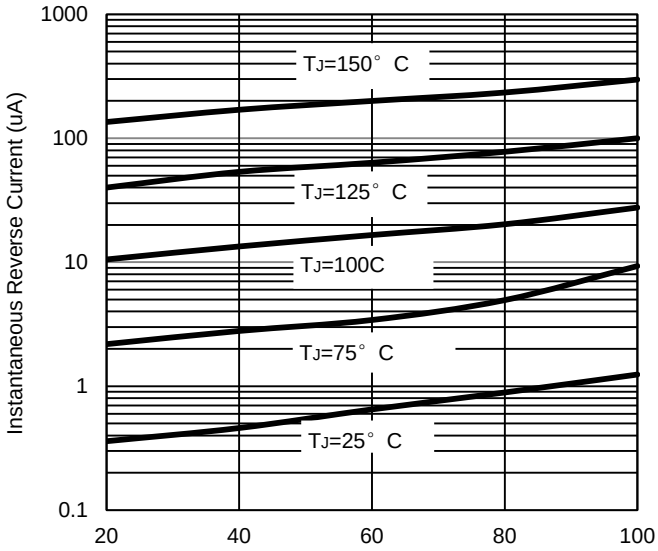

Fig. 4 - Typical Forward Characteristics

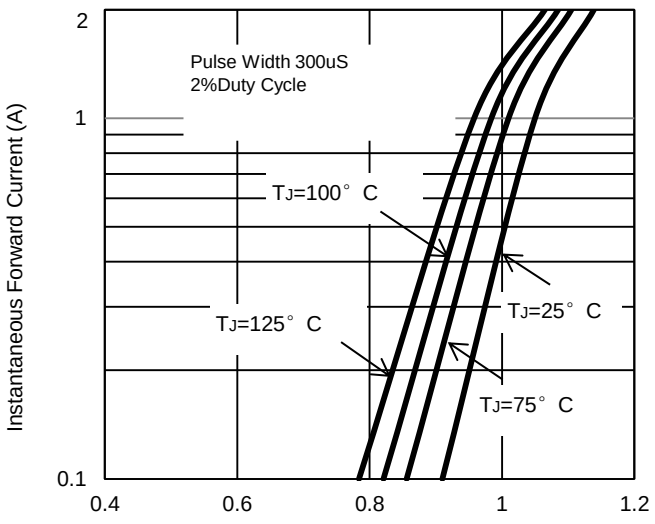

The curve above is for reference only.

Download from alldatasheet.com

Disclaimer

ALL specifications and data are subject to be changed without notice to improve reliability function or design or other reasons.

HY makes no warranty, representation or guarantee regarding the suitability of the products for any particular purpose or the continuing production of any product. To the maximum extent permitted by applicable law, HY disclaims (i) any and all liability arising out of the application or use of any product, (ii) any and all liability, including without limitation special,consequential or incidental damages, and (iii) any and all implied warranties, including warranties of fitness for particular purpose, non-infringement and merchantability.

Statements regarding the suitability of products for certain types of applications are based on HY's knowledge of typical requirements that are often placed on HY products in generic applications. Such statements are not binding statements about the suitability of products for a particular application. It is the customer's responsibility to validate that a particular product with the properties described in the product specification is suitable for use in a particular application.Parameters provided in datasheets and specifications may vary in different applications and performance may vary over time. All operating parameters, including typical parameters, must be validated for each customer application by the customer's technical experts. Product specifications do not expand or otherwise modify HY's terms and conditions of purchase, including but not limited to the warranty expressed therein.

Except as expressly indicated in writing, HY products are not designed for use in medical, life-saving, or life-sustaining applications or for any other applications in which the failure of the HY product could result in personal injury or death. Customers using or selling HY products not expressly indicated for use in such applications do so at their own risk.Please contact authorized HY personnel to obtain written terms and conditions regarding products designed for such applications.

No license, express or implied, by estoppel or otherwise, to any intellectual property rights is granted by this document or by any conduct of HY. Product names and markings noted herein may be trademarks of their respective owners.

Download from alldatasheet.com