Automotive & Industrial Grade Glass-Sealed Ceramic Base SMD Crystal



ABM3AIG

Pb in glass
(exempt 7(c) - I per RoHS II 2011/65/EU Annex)

5.0 x 3.2 x 1.3 mm
RoHS/RoHS II Compliant
MSL = N/A: Not Applicable

Features

- AEC-Q200 Qualified
- Automotive Grade 0: -40°C to +150°C
- TS16949 Production Line Certified
- PPAP Available Upon Request
- Hermetically Glass-sealed Ceramic Package
- RoHS/RoHS II Compliant

Applications

- Infotainment Systems
- Keyless Entry & Startup
- GPS & Navigation
- Comfort control
- ADAS (Advanced Driver Assistance Systems)
- Vehicle to Vehicle Communication
- LiDAR (Light Detection and Ranging)
- In-vehicle Networking
- Powertrain & Drive Control
- Power Control & Conversion
- Industrial Control & Automation

Electrical Specifications

Parameters	Min.	Typ.	Max.	Units	Notes
Frequency Range	8.000		50.000	MHz	
Operation Mode		Fundamental			
Operating Temperature	-40		+150	°C	Option “blank”; See options
	-40		+125		Option “K”; See options
Storage Temperature	-40		+150	°C	Option “blank”
	-40		+125		Options “K, J, D, N”
Frequency Tolerance @ +25°C	-50		+50	ppm	Option “blank”; See options
Frequency Stability over the Operating Temperature (ref. to +25°C)	-100		+100	ppm	Option “blank”; See options
	-150		+150		Option “R”; See options
Equivalent series resistance (R1)			150	Ω	8.000 – 9.999 MHz
			100		10.000 – 15.999 MHz
			60		16.000 – 19.999 MHz
			50		20.000 – 50.000 MHz
Shunt capacitance (C0)			3.0	pF	
Load capacitance (CL)		18		pF	Option “blank”; See options
Drive Level		10	100	µW	
Aging	-2		+2	ppm	@25°C± 3°C First year
Insulation Resistance	500			MΩ	@100 Vdc ± 15V

ABRACON LLC
5101 Hidden Creek Ln Spicewood TX 78669
Phone: 512-371-6159 | Fax: 512-351-8858
For terms and conditions of sales, please visit:
www.abracon.com

REVISED: 06-13-19

ABRACON IS ISO9001-2015 CERTIFIED

Automotive & Industrial Grade Glass-Sealed Ceramic Base SMD Crystal



ABM3AIG

Pb in glass
(exempt 7(c) - I per RoHS II 2011/65/EU Annex)

5.0 x 3.2 x 1.3 mm
RoHS/RoHS II Compliant
MSL = N/A: Not Applicable

Options and Part Identification (left blank if standard)

ABM3AIG- ☐ **MHz -** ☐ **-** ☐ **-** ☐ ☐ ☐ **-** ☐

Frequency in MHz
Please specify the frequency in MHz. (e.g. 14.31818MHz)

Load Capacitance (pF)
Blank: 18pF
If not standard, please specify CL in pF or S for series

Custom ESR if other than standard
R □: Specify a value in Ω (e.g.: R80)

Operating Temp.
Blank: -40°C to +150°C
N: -30°C to +85°C
D: -40°C to +85°C
J: -40°C to +105°C
K: -40°C to +125°C

Freq. Tolerance
Blank: ± 50 ppm
4: ± 30 ppm
3: ± 25 ppm
2: ± 20 ppm
7: ± 15 ppm
1: ± 10 ppm

Freq. Stability
Blank: ± 100 ppm
R: ± 150 ppm
Z: ± 50 ppm
P: ± 45 ppm (*)
F: ± 40 ppm (*)
H: ± 35 ppm (*)
Y: ± 30 ppm (*)
W: ± 25 ppm (*)
X: ± 20 ppm (*)
G: ± 15 ppm (*)

Packaging
Blank: Bulk
T: 1k pcs / reel

(*) Contact Abracon for Availability

ABRACON LLC
5101 Hidden Creek Ln Spicewood TX 78669
Phone: 512-371-6159 | Fax: 512-351-8858
For terms and conditions of sales, please visit:
www.abracon.com

REVISED: 06-13-19

ABRACON IS ISO9001-2015 CERTIFIED

Automotive & Industrial Grade Glass-Sealed Ceramic Base SMD Crystal



ABM3AIG

Pb in glass
(exempt 7(c) - I per RoHS II 2011/65/EU Annex)

5.0 x 3.2 x 1.3 mm
RoHS/RoHS II Compliant
MSL = N/A: Not Applicable

Mechanical Dimensions

Top View

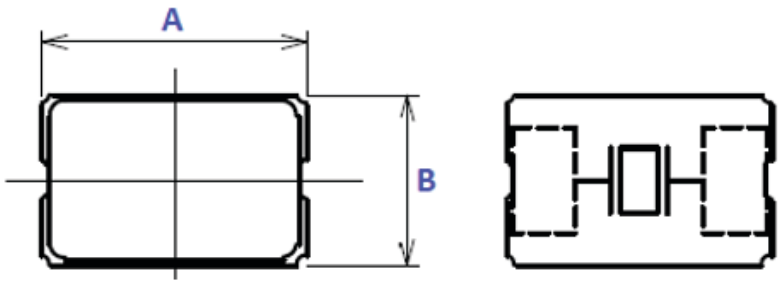

Side View

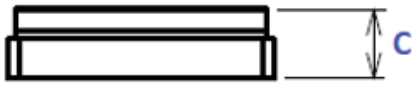

Bottom View

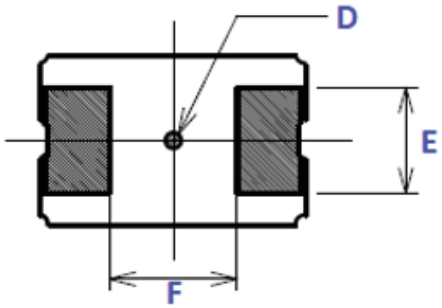

Recommended Land Pattern

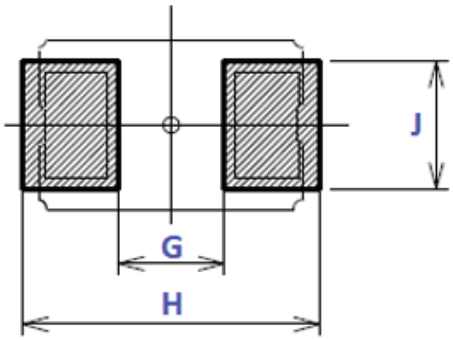

Alternative Bottom Packaging #1

Bottom View

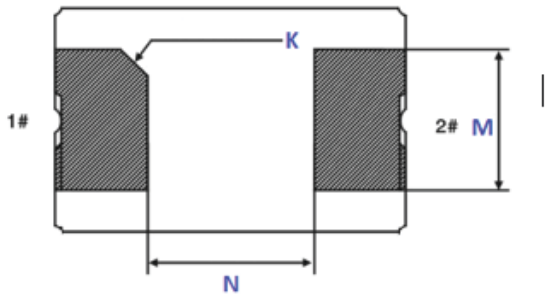

Dimensions	
A	5.0 ± 0.15
B	3.2 ± 0.15
C	1.3 ± 0.25
D	Ø 0.3
E	2.0
F	2.4
G	2.0
H	5.6
J	2.4
K	0.40 x 45°
M	2.0
N	2.4

Dimensions: mm

ABRACON LLC

5101 Hidden Creek Ln Spicewood TX 78669
Phone: 512-371-6159 | Fax: 512-351-8858
For terms and conditions of sales, please visit:
www.abracon.com

REVISED: 06-13-19

ABRACON IS
ISO9001-2015
CERTIFIED

Automotive & Industrial Grade Glass-Sealed Ceramic Base SMD Crystal



ABM3AIG

Pb in glass
(exempt 7(c) - I per RoHS II 2011/65/EU Annex)

5.0 x 3.2 x 1.3 mm
RoHS/RoHS II Compliant
MSL = N/A: Not Applicable

Reflow Profile

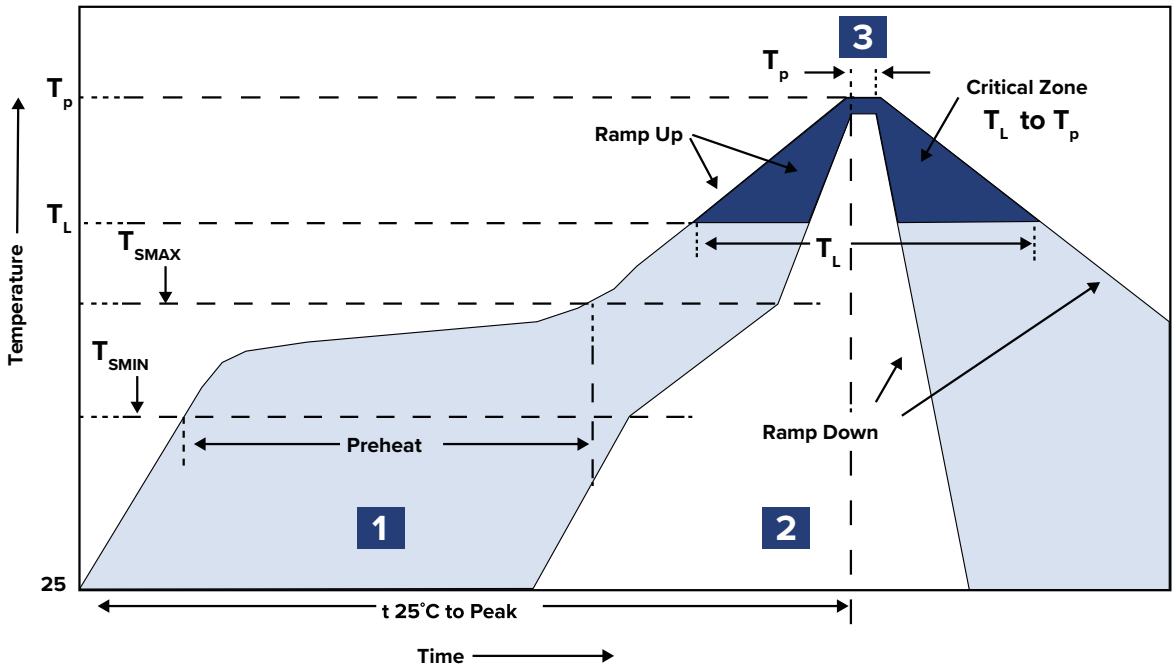

Zone	Description	Temperature	Time
1	Preheat / Soak	T_{SMIN} ~ T_{SMAX} 150°C ~ 180°C	60 ~ 120 sec.
2	Reflow	T_L 230°C	30 ~ 40 sec.
3	Peak heat	T_P 260°C±5°C	10 sec. MAX

ABRACON LLC
5101 Hidden Creek Ln Spicewood TX 78669
Phone: 512-371-6159 | Fax: 512-351-8858
For terms and conditions of sales, please visit:
www.abracon.com

REVISED: 06-13-19

ABRACON IS
ISO9001-2015
CERTIFIED

Automotive & Industrial Grade Glass-Sealed Ceramic Base SMD Crystal



ABM3AIG

Pb in glass
(exempt 7(c) - I per RoHS II 2011/65/EU Annex)

5.0 x 3.2 x 1.3 mm
RoHS/RoHS II Compliant
MSL = N/A: Not Applicable

Packaging

1000 pcs/reel

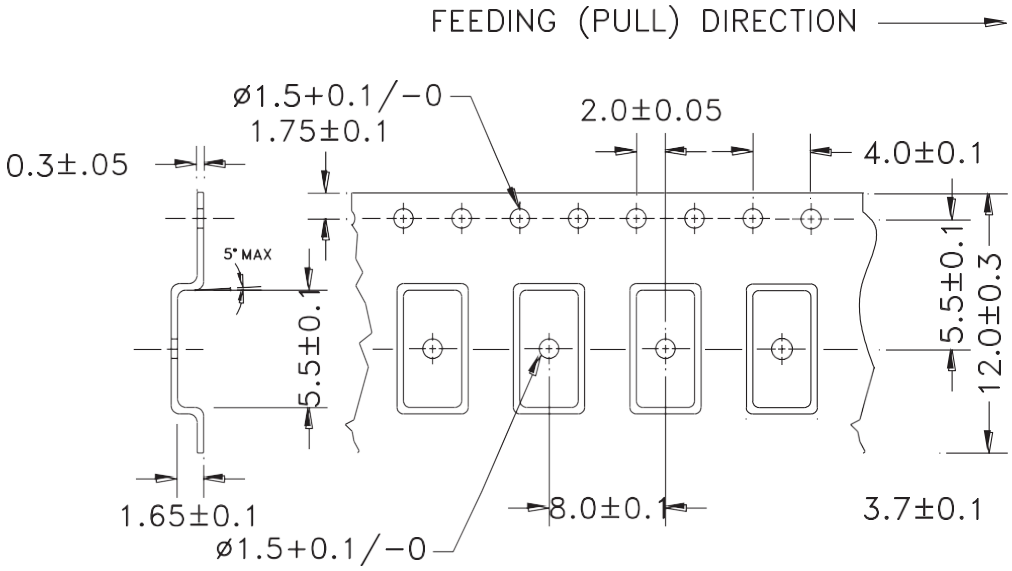

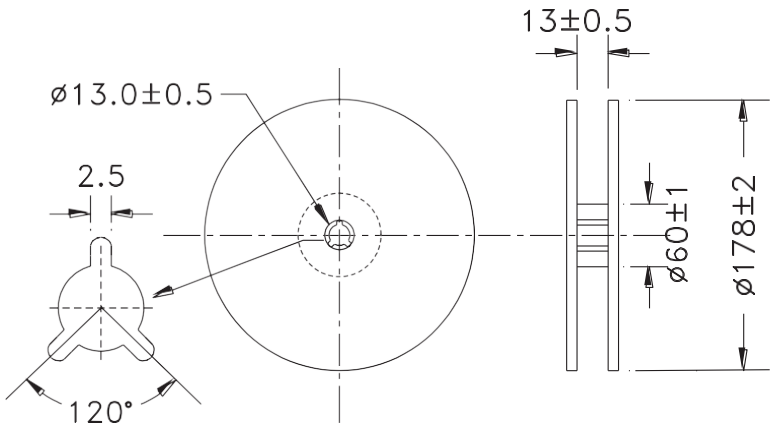

Dimensions: mm

ATTENTION: Abracon LLC's products are COTS – Commercial-Off-The-Shelf products; suitable for Commercial, Industrial and, where designated, Automotive Applications. Abracon's products are not specifically designed for Military, Aviation, Aerospace, Life-dependent Medical applications or any application requiring high reliability where component failure could result in loss of life and/or property. For applications requiring high reliability and/or presenting an extreme operating environment, written consent and authorization from Abracon LLC is required. Please contact Abracon LLC for more information.

ABRACON LLC

5101 Hidden Creek Ln Spicewood TX 78669
Phone: 512-371-6159 | Fax: 512-351-8858
For terms and conditions of sales, please visit:
www.abracon.com

REVISED: 06-13-19

ABRACON IS
ISO9001-2015
CERTIFIED