HC/49US (AT49) ULTRA LOW ESR SMD LOW PROFILE CRYSTAL

ABLS-LR



Pb RoHS Compliant

11.5 x 4.8 x 4.2 mm

FEATURES:

- Ultra low ESR as low as 20 ohms for 4MHz, 85% lower than typical SMD Low Profile HC49S Crystals
- Low negative resistance(-R) IC design can ensure high oscillation margin
- Tight stability and automotive grade temperature available
- Hermetically resistance weld sealed

APPLICATIONS:

- Low negative resistance u-controller design for low frequency
- Wide range of automotive applications
- Industrial applications

STANDARD SPECIFICATIONS:

PARAMETERS	
ABRACON P/N	ABLS-LR Series
Frequency	3.0 MHz to 36 MHz
Operation Mode	AT cut (Fundamental)
Operating Temperature	0°C to + 70°C (see options)
Storage Temperature	55°C to + 125°C
Frequency Tolerance	± 50 ppm max. (see options)
Frequency Stability over the Operating Temp. (Ref to +25°C)	3.0 ~ 3.579545MHz: ± 100 ppm max. (Standard only*) *Please contact ABRACON for other stability specs. 3.579545 ~ 36MHz: ± 50 ppm max. (see options)
Equivalent Series Resistance (R1)	See Table 1
Shunt Capacitance C_0	7pF max.
Load Capacitance C_L	18pF (see options)
Drive Level	1 mW max., 100µW typical
Aging at 25°C Per Year	± 5ppm max.
Insulation Resistance	500 MΩ min at 100Vdc ± 15V
Spurious Responses	-3dB max.
Drive level dependency (DLD)	from 1µW to 500µW (minimum 7 points tested)

TABLE 1: ESR

FREQUENCY (MHz)	ESR (Ω) Max.
3.000000	100
3.072000	100
3.276800	75
3.500000 - 4.000000	40
4.000001 - 4.500000	25
4.500001 - 6.999999	20
7.000000 - 12.999999	15
13.000000 - 30.000000	10

OPTIONS & PART IDENTIFICATION:

(Left blank if standard)

ABLS - LR - [ ] MHz - [ ] - [ ] - [ ] - [ ] - [ ]

Frequency in MHz
e.g. 3.579545MHz
14.31818MHz
24.000MHz

Load Capacitance
Please specify CL in pF or S for Series (10pF minimum)

Operating Temp.
- A: -10°C ~ +60°C
- B: -20°C ~ +70°C
- C: -30°C ~ +70°C
- N: -30°C ~ +85°C
- D: -40°C ~ +85°C
- J(*): -40°C to +105°C
- K(*): -40°C to +125°C
- L(*): -55°C to +125°C

Freq. Tolerance
- H5: ± 5 ppm
- 1: ± 10 ppm
- 7: ± 15 ppm
- 2: ± 20 ppm
- 3: ± 25 ppm
- 4: ± 30 ppm

Freq. Stability
- U(**): ± 10 ppm
- G: ± 15 ppm
- X: ± 20 ppm
- W: ± 25 ppm
- Y: ± 30 ppm
- H: ± 35 ppm
- Q: ± 100 ppm
- R: ± 150 ppm

Packaging
- Blank: Bulk
- T: Tape & Reel

* Frequency stability R option (±150ppm) only.
Contact ABRACON for tighter frequency stability.
** -10 to +60°C only.

30332 Esperanza, Rancho Santa Margarita, California 92688
tel 949-546-8000 | fax 949-546-8001 | www.abracon.com

HC/49US (AT49) ULTRA LOW ESR SMD LOW PROFILE CRYSTAL

ABLS-LR



RoHS Compliant

11.5 x 4.8 x 4.2 mm

OUTLINE DRAWING:

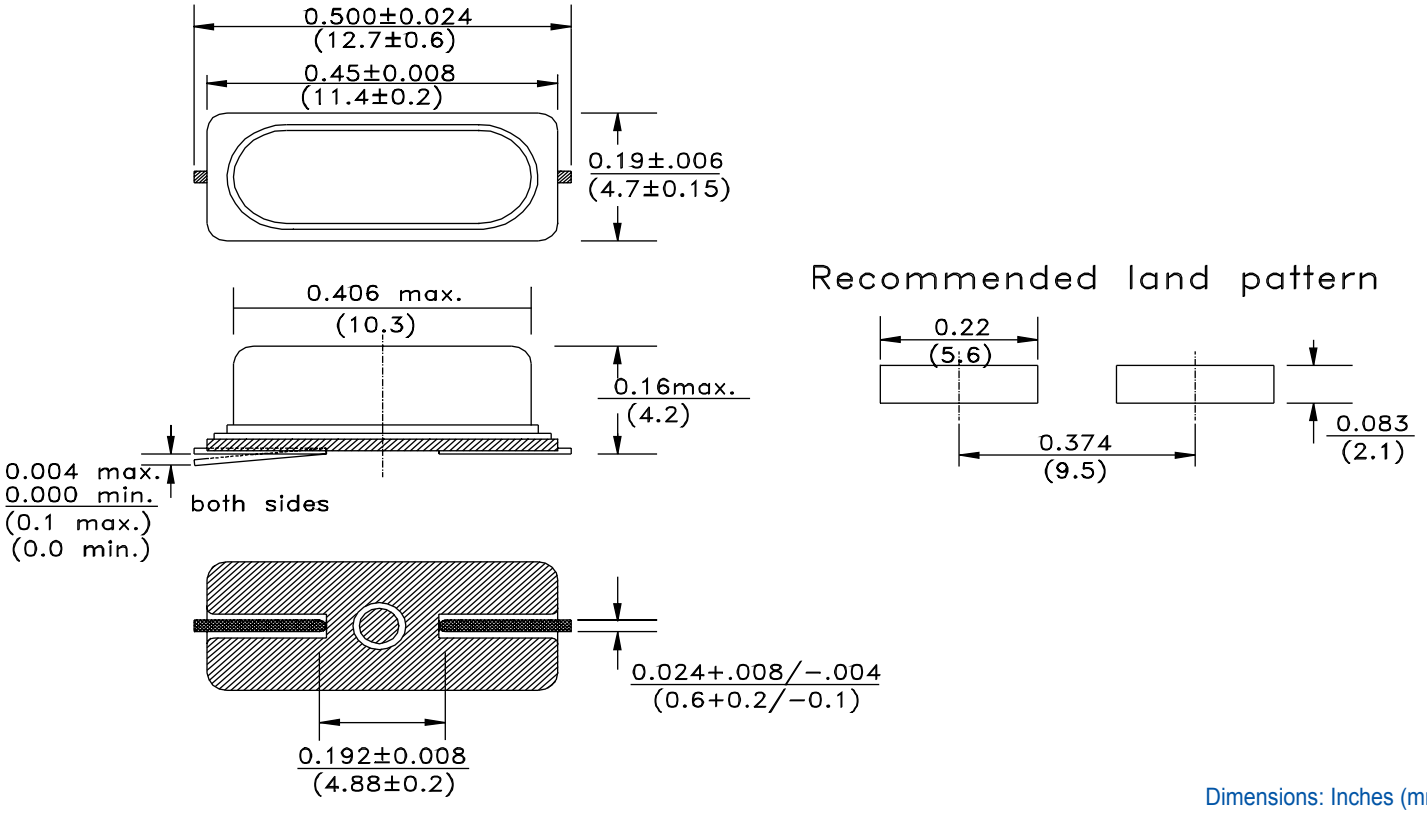

Dimensions: Inches (mm)

TAPE & REEL: T= tape and reel (1,000pcs/reel)

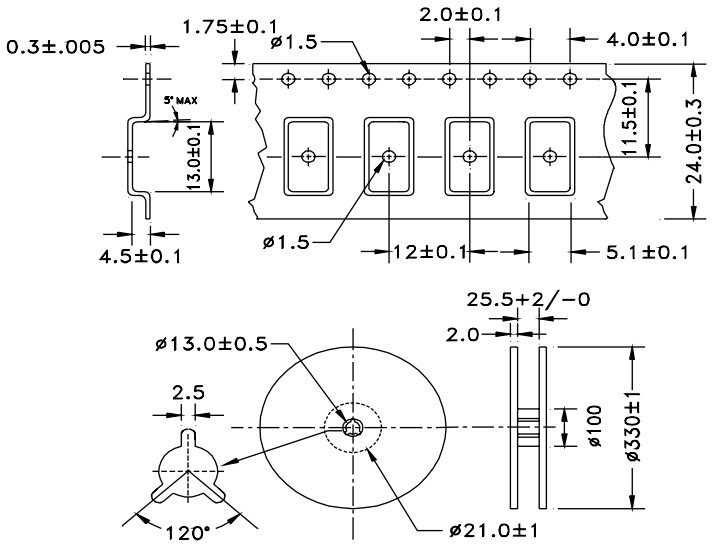

Dimensions: mm

REFLOW PROFILE:

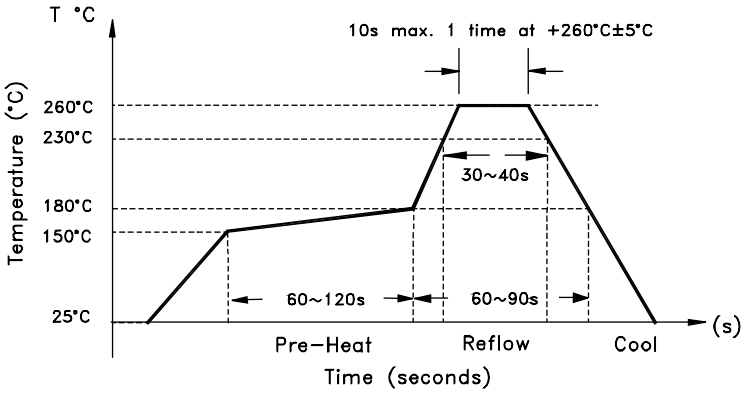

NOTE: Abracon manufactured products are intended for general commercial and industrial use. For applications requiring high reliability and/or presenting extreme operating environment, written consent & authorization from Abracon is required.

30332 Esperanza, Rancho Santa Margarita, California 92688
tel 949-546-8000 | fax 949-546-8001 | www.abracon.com