ABB0302

DDR SDRAM Buffer for Desktop PCs with 4 DDR DIMMS

FEATURES

- Generates 24 output buffers from one input.
- Supports up to four DDR DIMMS.
- Supports 266MHz DDR SDRAM.
- One additional output for feedback.
- Less than 5ns delay.
- Skew between any outputs is less than 100 ps.
- 2.5V Supply range.
- Enhanced DDR Output Drive selected by I2C.
- Available in 48 pin SSOP.

BLOCK DIAGRAM

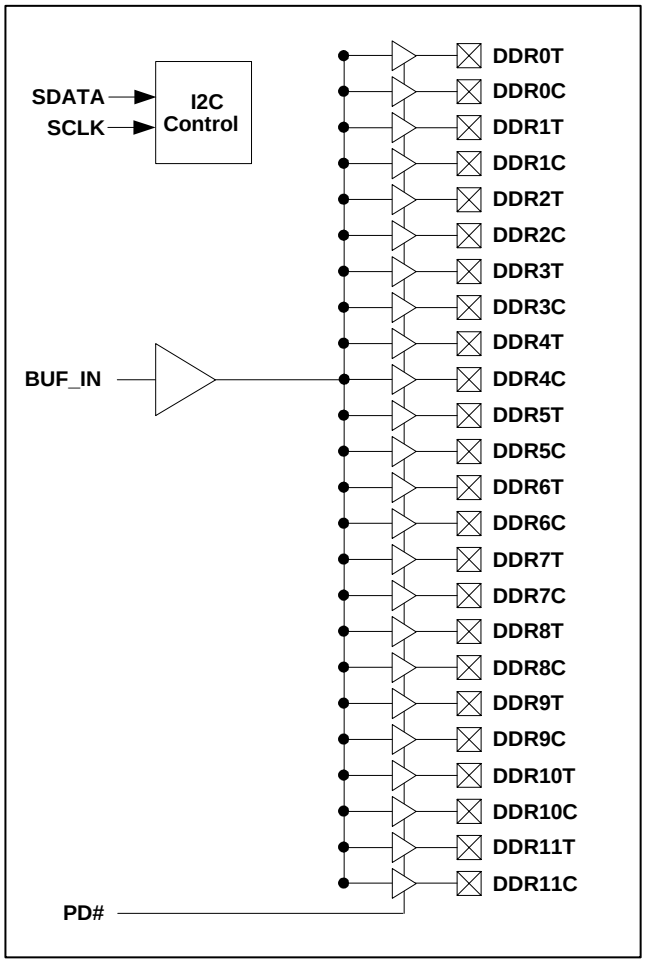

PIN CONFIGURATION

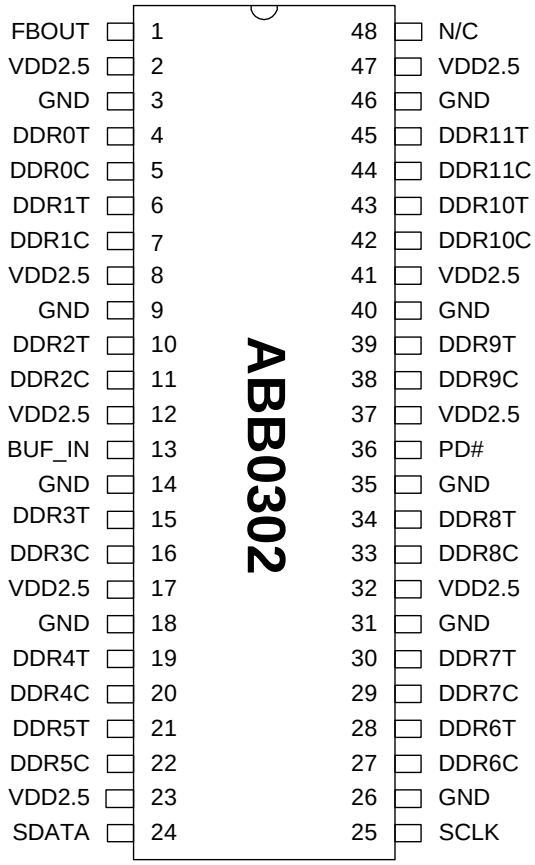

Note: #: Active Low

DESCRIPTION

The ABB0302 is designed as a 2.5V buffer to distribute high-speed clocks in PC applications. The device has 24 outputs. These outputs can be configured to support four unbuffered DDR DIMMS. The ABB0302 can be used in conjunction with a clock synthesizer for the VIA Pro 266 chipset.

The ABB0302 also has an I2C interface, which can enable or disable each output clock. When powered up, all output clocks are enabled (have internal pull ups).

PIN DESCRIPTIONS

Name	Number	Type	Description
FBOUT	1	O	Feedback clock for chipset.
BUF_IN	13	I	Reference input from chipset.
PD	36	I	Power Down Control input. When low, it will tri-state all outputs.
N/C	48		Not connected.
DDR[0:11]T	4,6,10,15,19, 21,28,30,34, 39,43,45	O	These outputs provide True copies of BUF_IN.
DDR[0:11]C	5,7,11,16,20, 22,27,29,33, 38,42,44	O	These outputs provide complementary copies of BUF_IN.
VDD2.5	2,8,12,17,23, 32,37,41,47	P	2.5V power supply.
GND	3,9,14,18,26, 31,35,40,46	P	Ground.

I2C BUS CONFIGURATION SETTING

Address Assignment	A6	A5	A4	A3	A2	A1	A0	R/W
	1	1	0	1	0	0	1	_
Slave Receiver/Transmitter	Provides both slave write and readback functionality							
Data Transfer Rate	Standard mode at 100kbits/s							
Data Protocol	This serial protocol is designed to allow both blocks write and read from the controller. The bytes must be accessed in sequential order from lowest to highest byte. Each byte transferred must be followed by 1 acknowledge bit. A byte transferred without acknowledged bit will terminate the transfer. The write or read block both begins with the master sending a slave address and a write condition (0xD2) or a read condition (0xD3). Following the acknowledge of this address byte, in Write Mode: the Command Byte and Byte Count Byte must be sent by the master but ignored by the slave, in Read Mode: the Byte Count Byte will be read by the master then all other Data Byte. Byte Count Byte default at power-up is = (0x09).							

I2C CONTROL REGISTERS

1. BYTE 6: Outputs Register (1=Enable, 0=Disable)

Bit	Pin#	Default	Description
Bit 7	48	1	Reserved
Bit 6	-	0	Reserved
Bit 5	-	0	Enhanced DDR Drive. 1 = Enhanced 25%
Bit 4	-	0	Reserved
Bit 3	45, 44	1	DDR11T, DDR11C
Bit 2	43, 42	1	DDR10T, DDR10C
Bit 1	39, 38	1	DDR9T, DDR9C
Bit 0	34, 33	1	DDR8T, DDR8C

2. BYTE 7: Outputs Register (1=Enable, 0=Disable)

Bit	Pin#	Default	Description
Bit 7	30, 29	1	DDR7T, DDR7C
Bit 6	28, 27	1	DDR6T, DDR6C
Bit 5	21, 22	1	DDR5T, DDR5C
Bit 4	19, 20	1	DDR4T, DDR4C
Bit 3	15, 16	1	DDR3T, DDR3C
Bit 2	10, 11	1	DDR2T, DDR2C
Bit 1	6, 7	1	DDR1T, DDR1C
Bit 0	4, 5	1	DDR0T, DDR0C

DDR SDRAM Buffer for Desktop PCs with 4 DDR DIMMS

ELECTRICAL SPECIFICATIONS

1. Absolute Maximum Ratings

PARAMETERS	SYMBOL	MIN.	MAX.	UNITS
Supply Voltage	V_{DD}		4.6	V
Input Voltage, dc	V_I	V_{SS}-0.5	V_{DD}+0.5	V
Output Voltage, dc	V_O	V_{SS}-0.5	V_{DD}+0.5	V
Storage Temperature	T_S	-65	150	°C
Ambient Operating Temperature*	T_A	-40	85	°C
Junction Temperature	T_J		125	°C
Lead Temperature (soldering, 10s)			260	°C
ESD Protection, Human Body Model			2	kV

Exposure of the device under conditions beyond the limits specified by Maximum Ratings for extended periods may cause permanent damage to the device and affect product reliability. These conditions represent a stress rating only, and functional operations of the device at these or any other conditions above the operational limits noted in this specification is not implied.

* Note: Operating Temperature is guaranteed by design for all parts (COMMERCIAL and INDUSTRIAL), but tested for COMMERCIAL grade only.

2. Operating Conditions

PARAMETERS	SYMBOL	MIN.	MAX.	UNITS
Supply Voltage	$V_{DD2.5}$	2.375	2.625	V
Input Capacitance	C_{IN}		5	pF
Output Capacitance	C_{OUT}		6	pF

3. Electrical Specifications

PARAMETERS	SYMBOL	CONDITIONS	MIN.	TYP.	MAX.	UNITS
Input High Voltage	V_{IH}	All Inputs except I2C	2.0		V_{DD}+0.3	V
Input Low Voltage	V_{IL}	All inputs except I2C	V_{SS}-0.3		0.8	V
Input High Current	I_{IH}	$V_{IN} = V_{DD}$			TBM	uA
Input Low Current	I_{IL}	$V_{IN} = 0$			TBM	uA
Output High Voltage	V_{OH}	IOL = -12mA, VDD = 2.375V	1.7			V
Output Low Voltage	V_{OL}	IOL = 12mA, VDD = 2.375V			0.6	V
Output High Current	I_{OH}	VDD = 2.375V, VOUT=1V	-18	-32		mA
Output Low Current	I_{OL}	VDD = 2.375V, VOUT=1.2V	26	35		mA

Note: TBM: To be measured

3. Electrical Specifications (Continued)

PARAMETERS	SYMBOL	CONDITIONS	MIN.	TYP.	MAX.	UNITS
Supply Current	I_{DDS}	PD = 0			TBM	mA
Output Crossing Voltage	V_{OC}		(VDD/2) -0.1	VDD/2	(VDD/2)+ 0.1	V
Output Voltage Swing	V_{OUT}		1.1		VDD-0.4	V
Duty Cycle	D_T	Measured @ 1.5V	45	50	55	%
Max. Operating Frequency			66		170	MHz
Rising Edge Rate	T_{OR}	Measured @ 0.4V ~ 2.4V	1.0	1.5	2.0	V/ns
Falling Edge Rate	T_{OF}	Measured @ 2.4V ~ 0.4V	1.0	1.5	2.0	V/ns
Clock Skew (pin to pin)	T_{SKEW}	All outputs equally loaded			100	ps
Stabilization Time	T_{ST}				0.1	ms

Note: TBM: To be measured

DDR SDRAM Buffer for Desktop PCs with 4 DDR DIMMS

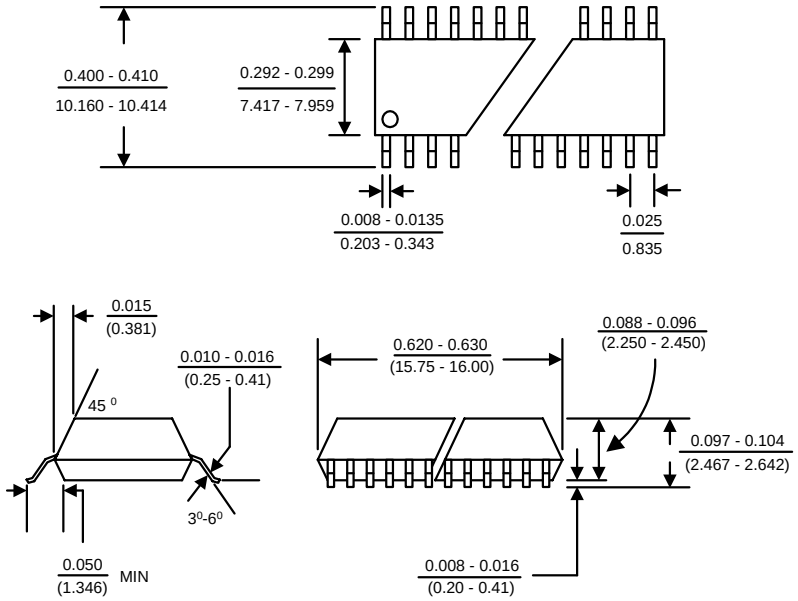

48PIN SSOP

PACKAGE INFORMATION

For part ordering, please contact our Sales Department:
30332 Esperanza., Rancho Santa Margarita, Ca 92688
Ph: 949-546-8000 Fax: 949-546-8001

PART NUMBER
The order number for this device is a combination of the following:
Device number, Package type and Operating temperature range

ABB0302 X C

PART NUMBER

TEMPERATURE
C=COMMERCIAL
I=INDUSTRIAL

PACKAGE TYPE
S=SOIC

Order Number	Marking	Package Option
ABB0302XC-T	ABB0302XC	SSOP - Tape and Reel
ABB0302XC	ABB0302XC	SSOP - Tube

ORDERING INFORMATION

Abracon Corporation, reserves the right to make changes in its products or specifications, or both at any time without notice. The information furnished by Abracon is believed to be accurate and reliable. However, Abracon makes no guarantee or warranty concerning the accuracy of said information and shall not be responsible for any loss or damage of whatever nature resulting from the use of, or reliance upon this product.

LIFE SUPPORT POLICY: Abracon's products are not authorized for use as critical components in life support devices or systems without the express written approval of the President of Abracon Corporation.