ABA-32563
2.5 GHz Broadband Silicon RFIC Amplifier

Data Sheet

Description

Avago's ABA-32563 is an economical, easy-to-use, internally 50Ω matched, silicon monolithic broadband amplifier that offers excellent gain and broadband response from DC to 2.5 GHz. Packaged in an ultra-miniature SOT-363 package, it requires half the board spaceof a SOT-143 package.

At 2 GHz, the ABA-32563 offers a small-signal gain of 19 dB, output P1dB of 8.4 dBm and 19.5 dBm output third order intercept point. It is suitable for use as wideband applications. They are designed for low cost gain blocks in cellular applications, DBS tuners, LNB and other wireless communication systems.

ABA-32563 is fabricated using Avago's HP25 silicon bipolar process, which employs a double-diffused single polysilicon process with self-aligned submicron emitter geometry. The process is capable of simultaneous high f_T and high NPN breakdown (25 GHz f_T at 6V BVCEO). The process utilizes industry standard device oxide isolation technologies and submicron aluminum multilayer interconnect to achieve superior performance, high uniformity, and proven reliability.

Features

- Operating Frequency DC ~ 2.5 GHz
- 19 dB Gain
- VSWR < 2.0 throughout operating frequency
- 8.4 dBm Output P1dB
- 19.5 dBm Output IP3
- 3.5 dB Noise Figure
- Unconditionally Stable
- Single 3V Supply (Id = 37 mA)
- Lead-free

Applications

- Amplifier for Cellular, Cordless, Special Mobile Radio, PCS, ISM, Wireless LAN, DBS, TVRO, and TV Tuner Applications

Surface Mount Package: SOT-363/SC70

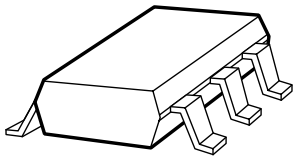

Attention:
Observe precautions for handling electrostatic sensitive devices.

ESD Machine Model (Class A)

ESD Human Body Model (Class 1B)

Refer to Avago Application Note A004R:
Electrostatic Discharge Damage and Control.

Pin Connections and Package Marking

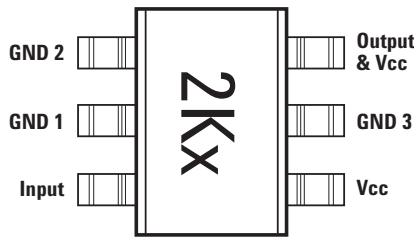

Note:
Top View. Package marking provides orientation and identification.
"x" is the date code.

Simplified Schematic

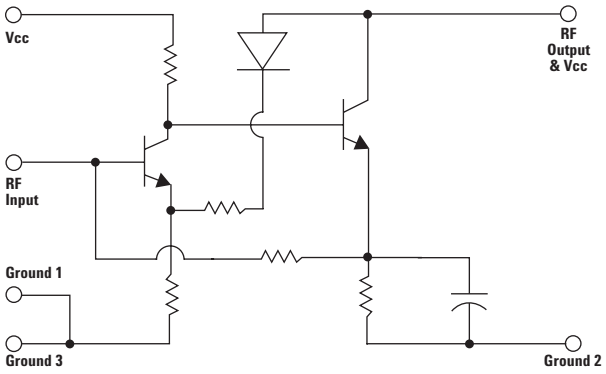

ABA-32563 Absolute Maximum Ratings[1]

Symbol	Parameter	Units	Absolute Max.
V_{cc}	Device Voltage, RF output to ground (T = 25°C)	V	6
P_{in}	CW RF Input Power (Vcc = 3V)	dBm	15
P_{diss}	Total Power Dissipation[3]	W	0.6
T_j	Junction Temperature	°C	150
T_{STG}	Storage Temperature	°C	-65 to 150

Thermal Resistance[2] (Vcc = 3V)
θ_{j-c} = 124.3°C/W

Notes:
1. Operation of this device in excess of any of these limits may cause permanent damage.
2. Thermal resistance measured using 150°C Liquid Crystal Measurement Technique.
3. Board (package belly) temperature, Tc, is 25°C. Derate 8.1 mW/°C for Tc > 120.8°C.

Electrical Specifications

T_c = +25°C, Z_o = 50 Ω, P_{in} = -30 dBm, V_{cc} = 3V, Freq = 2 GHz, unless stated otherwise.

Symbol	Parameter and Test Condition	Units	Min.	Typ.	Max.	Std Dev.
Gp[1]	Power Gain ($\|S_{21}\|^2$)	dB	17.5	19.0		
ΔGp	Power Gain Flatness, f = 0.1 ~ 1.5 GHz	dB		1.0		
	f = 0.1 ~ 2.5 GHz			3.0		
NF[1]	Noise Figure	dB		3.5	4.4	
P1dB[1]	Output Power at 1dB Gain Compression	dBm		8.4		
OIP3[1]	Output Third Order Intercept Point	dBm		19.5		
$VSWR_{in}$[1]	Input VSWR			<1.5		
$VSWR_{out}$[1]	Output VSWR			<1.5		
Icc[1]	Device Current	mA		37	42.5	
Td[1]	Group Delay	ps		140		

Notes:
1. Measurements taken on 50Ω test board shown on Figure 1. Excess circuit losses had been de-embedded from actual measurements. Standard deviation and typical data based on at least 500 parts sample size from 2 wafer lots. Future wafers allocated to this product may have nominal values anywhere within the upper and lower spec limits.

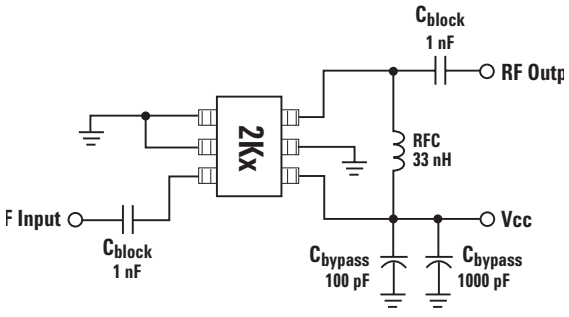

Figure 1. ABA-32563 Production Test Circuit.

ABA-32563 Typical Performance

$T_c = +25°C$, $Z_o = 50\Omega$, $V_{cc} = 3V$ unless stated otherwise.

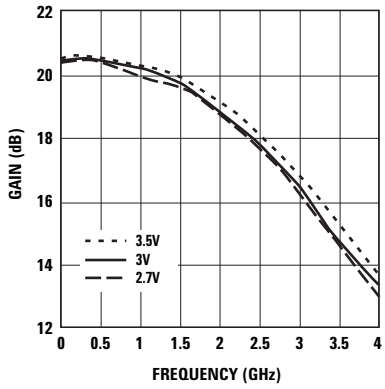

Figure 2. Gain vs. Frequency and Voltage.

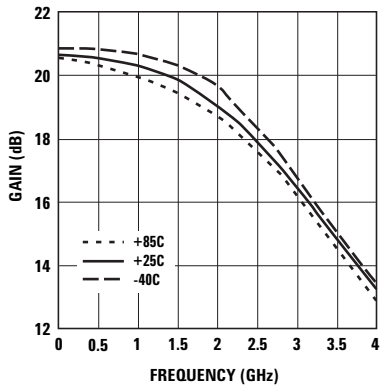

Figure 3. Gain vs. Frequency and Temperature.

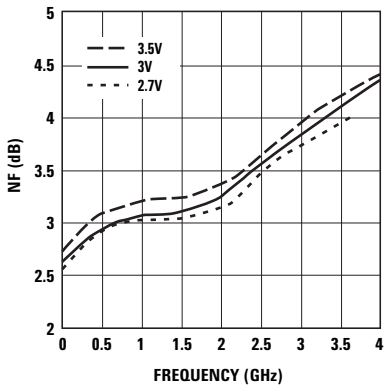

Figure 4. Noise Figure vs. Frequency and Voltage.

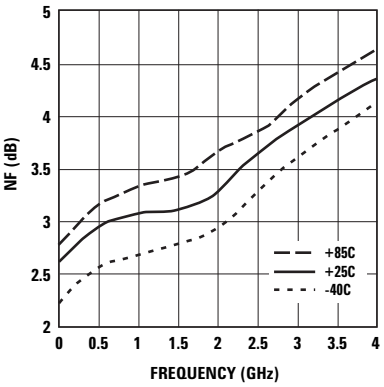

Figure 5. Noise Figure vs. Frequency and Temperature.

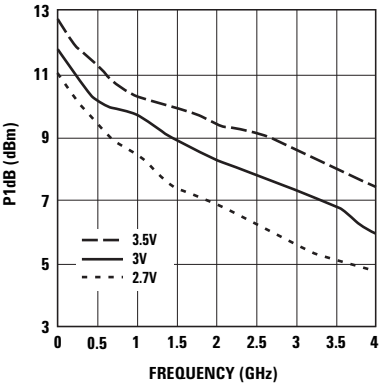

Figure 6. Output Power for 1 dB Gain Compression vs. Frequency and Voltage.

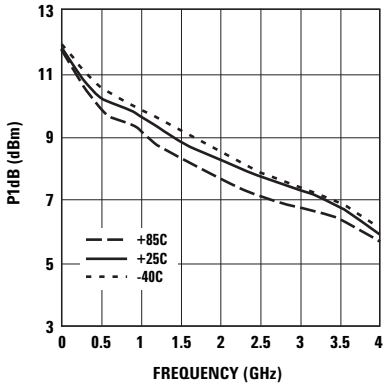

Figure 7. Output Power for 1 dB Gain Compression vs. Frequency and Temperature.

ABA-32563 Typical Performance, continued

$T_c = +25°C$, $Z_o = 50\Omega$, $V_{cc} = 3V$ unless stated otherwise.

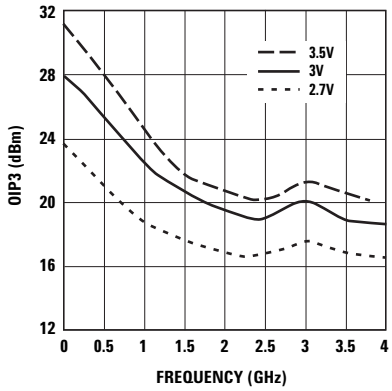

Figure 8. Output IP3 vs. Frequency and Voltage.

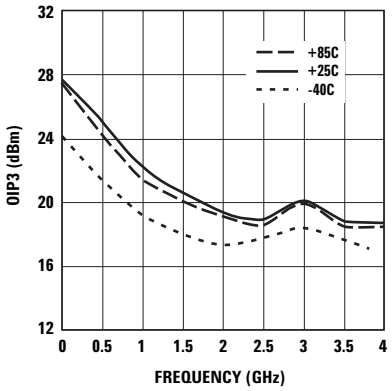

Figure 9. Output IP3 vs. Frequency and Temperature.

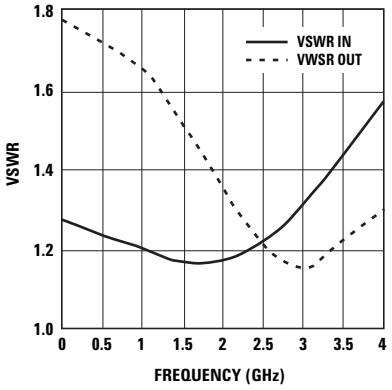

Figure 10. Input and Output VSWR vs. Frequency.

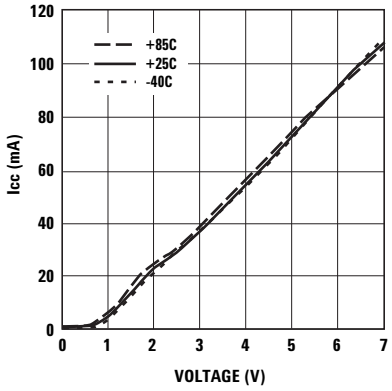

Figure 11. Supply Current vs. Voltage and Temperature.

ABA-32563 Typical Scattering Parameters

$T_C = +25°C$, $Z_0 = 50\Omega$, $V_{CC} = 3V$, unless stated otherwise

Freq (GHz)	S_{11} Mag.	S_{11} Ang.	S_{21} dB	S_{21} Mag.	S_{21} Ang.	S_{12} Mag.	S_{12} Ang.	S_{22} Mag.	S_{22} Ang.	K Factor
0.10	0.12	171.5	20.0	10.00	-5.6	0.02	2.6	0.28	-6.5	2.70
0.20	0.11	167.2	20.0	10.04	-11.0	0.02	6.0	0.27	-12.9	2.70
0.30	0.11	162.7	20.1	10.07	-16.7	0.02	9.5	0.27	-18.8	2.70
0.40	0.10	158.0	20.1	10.09	-22.5	0.02	12.8	0.27	-24.8	2.70
0.50	0.10	139.9	20.0	10.02	-28.8	0.02	15.7	0.26	-27.6	2.60
0.60	0.10	129.4	20.0	9.95	-34.7	0.02	18.6	0.26	-31.7	2.60
0.70	0.10	121.2	19.9	9.88	-40.6	0.02	21.2	0.25	-35.9	2.50
0.80	0.09	111.6	19.8	9.79	-46.4	0.02	23.5	0.25	-40.4	2.40
0.90	0.09	102.0	19.7	9.69	-52.2	0.02	25.5	0.25	-45.0	2.40
1.00	0.09	93.3	19.6	9.58	-58.1	0.02	26.9	0.24	-49.8	2.30
1.10	0.08	84.1	19.5	9.48	-63.7	0.02	28.6	0.24	-54.5	2.30
1.20	0.08	75.4	19.4	9.35	-69.5	0.02	29.6	0.23	-59.4	2.20
1.30	0.08	66.5	19.3	9.24	-75.2	0.03	30.2	0.22	-64.5	2.10
1.40	0.08	55.2	19.2	9.12	-80.8	0.03	30.9	0.22	-69.8	2.10
1.50	0.08	45.2	19.1	8.99	-86.5	0.03	31.4	0.21	-75.2	2.10
1.60	0.07	34.1	19.0	8.86	-92.3	0.03	31.8	0.20	-80.7	2.00
1.70	0.08	24.4	18.8	8.71	-98.1	0.03	31.9	0.18	-86.4	2.00
1.80	0.08	10.6	18.6	8.54	-103.6	0.03	31.7	0.17	-92.0	2.00
1.90	0.08	-2.2	18.5	8.41	-109.3	0.03	31.9	0.16	-98.5	2.00
2.00	0.08	-12.5	18.4	8.27	-115.0	0.03	31.9	0.15	-105.6	2.00
2.20	0.08	-34.6	17.9	7.87	-126.4	0.03	31.8	0.12	-120.6	2.00
2.40	0.09	-57.6	17.5	7.51	-137.5	0.04	31.9	0.10	-139.2	2.00
2.60	0.10	-77.3	17.0	7.08	-148.8	0.04	32.3	0.08	-163.9	2.00
2.80	0.12	-93.3	16.4	6.64	-159.3	0.04	32.4	0.07	167.4	2.10
3.00	0.13	-108.3	15.9	6.21	-169.6	0.04	32.4	0.07	137.7	2.10
3.20	0.15	-124.9	15.3	5.81	-179.7	0.04	32.1	0.08	115.7	2.10
3.40	0.16	-137.7	14.6	5.39	170.6	0.05	32.2	0.09	98.7	2.10
3.60	0.19	-150.1	14.0	5.04	161.4	0.05	31.5	0.10	86.3	2.10
3.80	0.20	-162.9	13.5	4.71	152.1	0.05	31.0	0.12	78.9	2.10
4.00	0.22	-175.0	12.8	4.38	142.9	0.05	30.5	0.13	71.9	2.10
4.20	0.23	175.0	12.1	4.04	134.4	0.06	30.0	0.14	65.2	2.10
4.40	0.26	166.1	11.6	3.79	126.2	0.06	28.2	0.15	59.1	2.10
4.60	0.27	155.3	11.0	3.54	117.3	0.06	26.7	0.15	55.0	2.10
4.80	0.28	145.8	10.2	3.25	108.7	0.07	25.2	0.16	50.2	2.10
5.00	0.29	138.3	9.5	2.99	101.3	0.07	23.2	0.16	45.0	2.20
5.20	0.30	131.7	8.8	2.77	94.2	0.08	20.8	0.16	40.1	2.20
5.40	0.31	126.2	8.2	2.57	87.6	0.08	18.4	0.16	35.1	2.20
5.60	0.32	120.9	7.7	2.42	81.0	0.09	15.6	0.16	30.3	2.20
5.80	0.34	115.6	7.2	2.28	74.3	0.09	12.7	0.16	25.3	2.20
6.00	0.35	110.4	6.6	2.14	67.7	0.09	9.6	0.15	23.8	2.20

Device Models

Refer to Avago's web site
www.avagotech.com/view/rf

Ordering Information

Part Number	Devices per Container	Container
ABA-32563-TR1G	3000	7" reel
ABA-32563-TR2G	10000	13" reel
ABA-32563-BLKG	100	antistatic bag

Note: Only lead-free option available.

Package Dimensions
Outline 63 (SOT-363/SC-70)

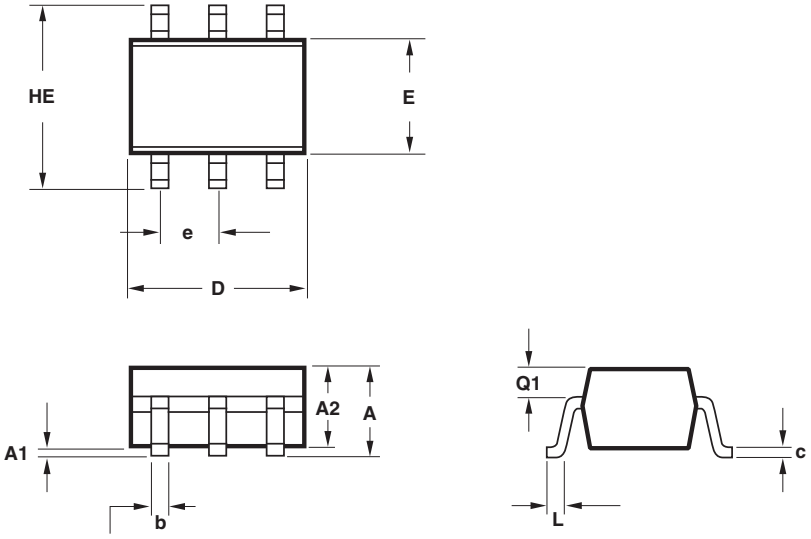

SYMBOL	DIMENSIONS (mm)	
	MIN.	MAX.
E	1.15	1.35
D	1.80	2.25
HE	1.80	2.40
A	0.80	1.10
A2	0.80	1.00
A1	0.00	0.10
Q1	0.10	0.40
e	0.650 BCS	
b	0.15	0.30
c	0.10	0.20
L	0.10	0.30

NOTES:
1. All dimensions are in mm.
2. Dimensions are inclusive of plating.
3. Dimensions are exclusive of mold flash & metal burr.
4. All specifications comply to EIAJ SC70.
5. Die is facing up for mold and facing down for trim/form, ie: reverse trim/form.
6. Package surface to be mirror finish.

Recommended PCB Pad Layout for Avago's SC70 6L/SOT-363 Products

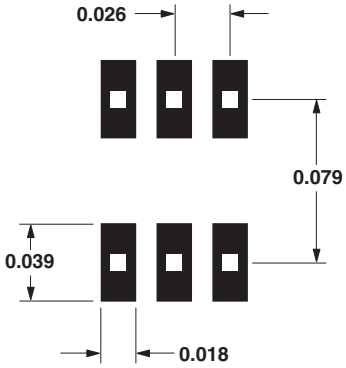

Dimensions in inches.

Device Orientation

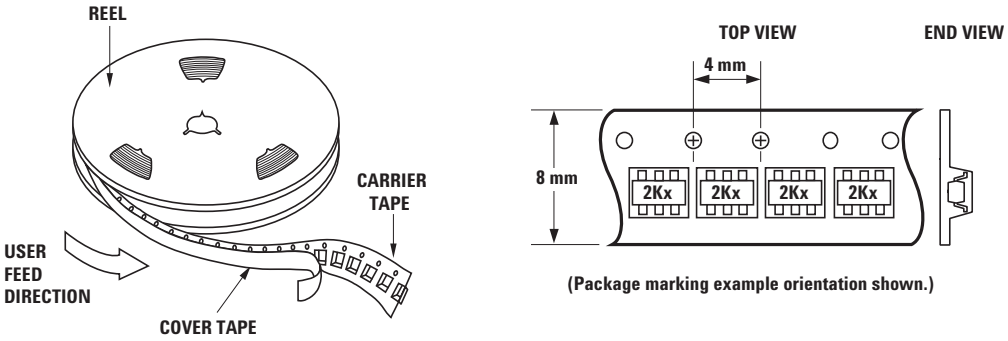

(Package marking example orientation shown.)

Tape Dimensions and Product Orientation for Outline 63

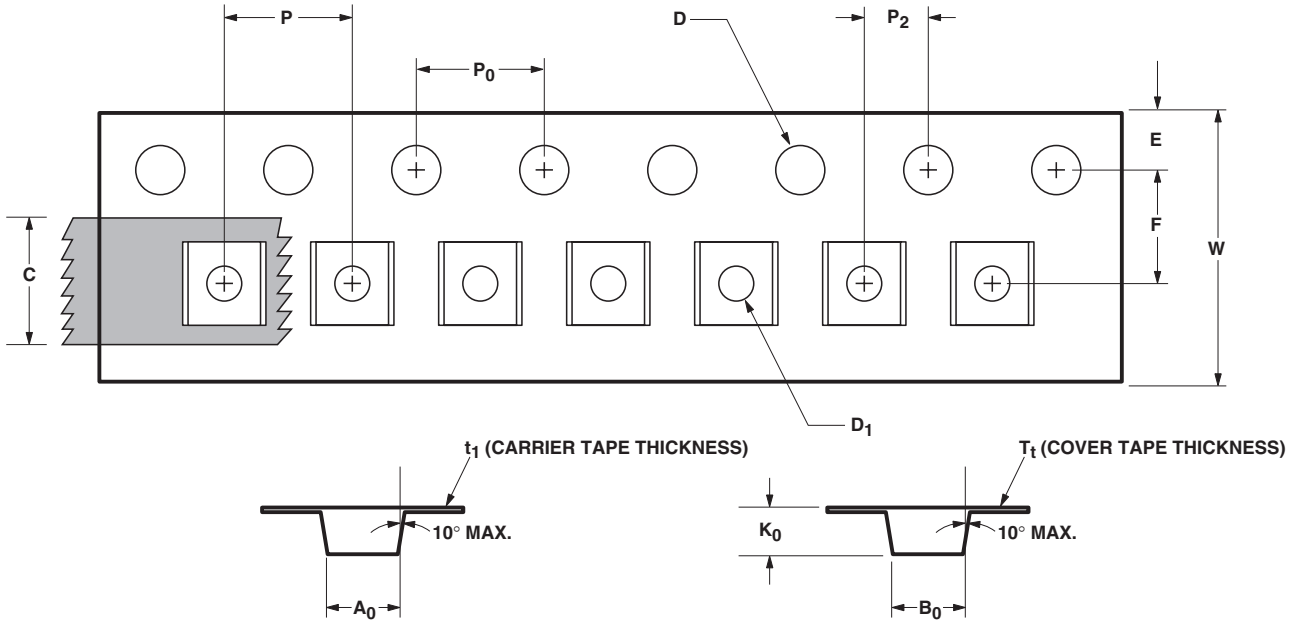

DESCRIPTION		SYMBOL	SIZE (mm)	SIZE (INCHES)
CAVITY	LENGTH	A_0	2.40 ± 0.10	0.094 ± 0.004
	WIDTH	B_0	2.40 ± 0.10	0.094 ± 0.004
	DEPTH	K_0	1.20 ± 0.10	0.047 ± 0.004
	PITCH	P	4.00 ± 0.10	0.157 ± 0.004
	BOTTOM HOLE DIAMETER	D_1	1.00 + 0.25	0.039 + 0.010
PERFORATION	DIAMETER	D	1.50 ± 0.10	0.061 + 0.002
	PITCH	P_0	4.00 ± 0.10	0.157 ± 0.004
	POSITION	E	1.75 ± 0.10	0.069 ± 0.004
CARRIER TAPE	WIDTH	W	8.00 + 0.30 - 0.10	0.315 + 0.012
	THICKNESS	t_1	0.254 ± 0.02	0.0100 ± 0.0008
COVER TAPE	WIDTH	C	5.40 ± 0.10	0.205 + 0.004
	TAPE THICKNESS	T_t	0.062 ± 0.001	0.0025 ± 0.0004
DISTANCE	CAVITY TO PERFORATION (WIDTH DIRECTION)	F	3.50 ± 0.05	0.138 ± 0.002
	CAVITY TO PERFORATION (LENGTH DIRECTION)	P_2	2.00 ± 0.05	0.079 ± 0.002

For product information and a complete list of distributors, please go to our web site: **www.avagotech.com**

Avago, Avago Technologies, and the A logo are trademarks of Avago Technologies in the United States and other countries.
Data subject to change. Copyright © 2005-2009 Avago Technologies. All rights reserved. Obsoletes 5989-1969EN
AV02-1783EN - February 11, 2009