THIS DOCUMENT CONTAINS DATA PROPRIETARY TO PROJECTS UNLIMITED, INC. ANY USE OR REPRODUCTION, IN ANY FORM, WITHOUT PRIOR WRITTEN PERMISSION OF PROJECTS UNLIMITED, INC. IS PROHIBITED.
© 2003, Projects Unlimited Inc.

SPECIFICATIONS

PARAMETERS	VALUES	UNITS
RESONANT FREQUENCY	1,300±500	Hz
RESONANT IMPEDANCE (MAX)	200	Ohm
MAX INPUT VOLTAGE	30	Vp-p
CAPACITANCE @ 1KHz	150,000±30%	pF
PLATE MATERIAL	BRASS	-
OPERATING TEMPERATURE	-20 ~ +60	°C
STORAGE TEMPERATURE	-20 ~ +70	°C

REVISIONS			
LTR	DESCRIPTION	DATE	APPROVED
-	RELEASED FROM ENGINEERING	10/25/04	
A	REVISED DIMENSION SIZE AND STYLE	01/30/06	B.R.
B	REVISED DIMENSIONS	10/1/09	B.R.

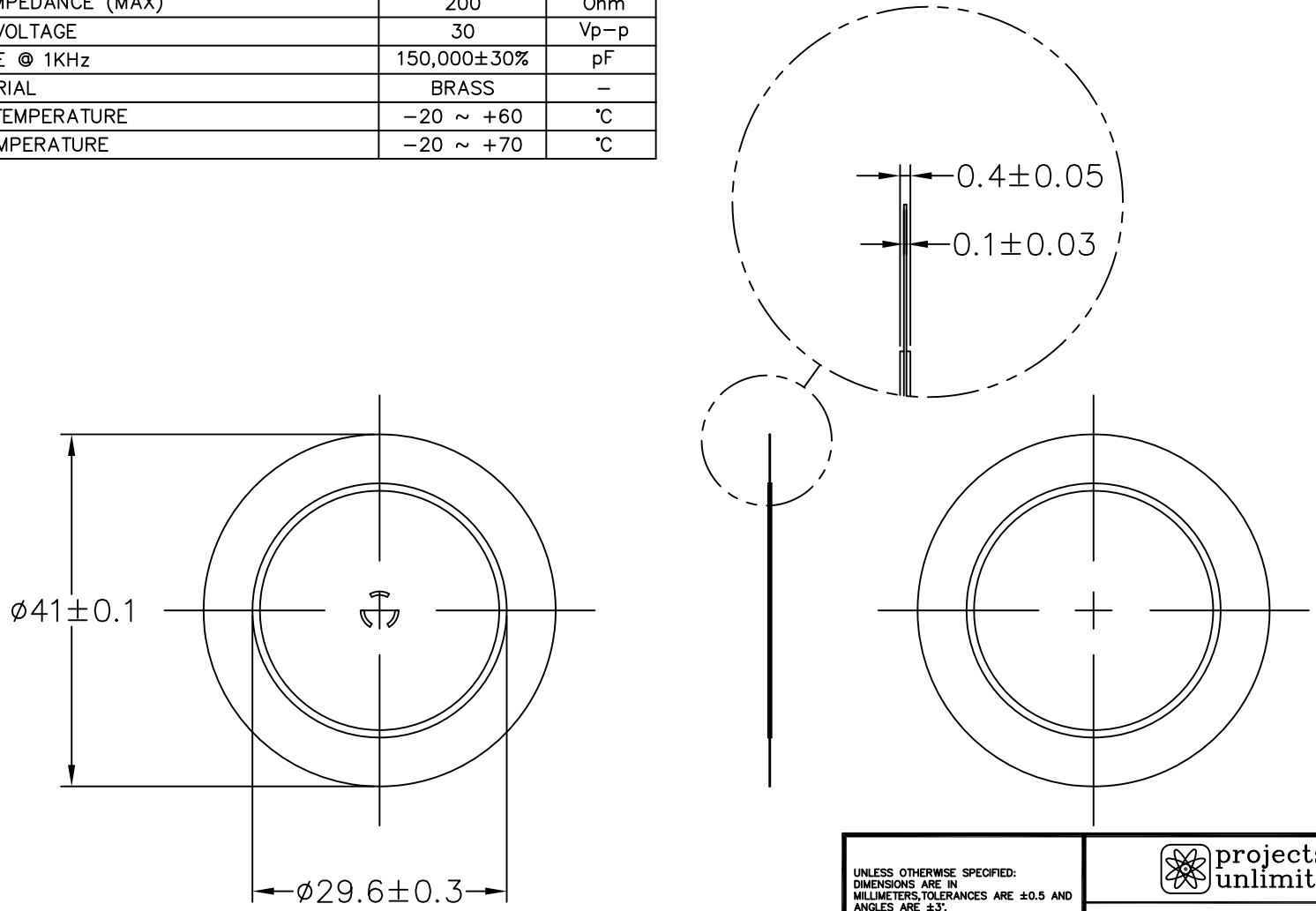

NOTES:

1. ALL DIMENSIONS ARE IN MILLIMETERS.
2. SPECIFICATION SUBJECT TO CHANGE OR WITHDRAWAL WITHOUT NOTICE.

FILE NAME
AB4113B.DWG

UNLESS OTHERWISE SPECIFIED: DIMENSIONS ARE IN MILLIMETERS, TOLERANCES ARE ±0.5 AND ANGLES ARE ±3°.

APPROVALS	DATE
DRAWN R.A.C.	10/04
APPROVED R.W.	10/04

DO NOT SCALE DRAWING

projects ® unlimited Dayton , Ohio

PIEZO CERAMIC BENDER
AB4113B

SIZE A | DRAWING NO. AB4113B

SCALE: N.T.S. | SHEET 1 OF 1