BURR-BROWN®
APPLICATION BULLETIN
Mailing Address: PO Box 11400 • Tucson, AZ 85734 • Street Address: 6730 S. Tucson Blvd. • Tucson, AZ 85706
Tel: (602) 746-1111 • Twx: 910-952-111 • Telex: 066-6491 • FAX (602) 889-1510 • Immediate Product Info: (800) 548-6132

POWER AMPLIFIER STRESS AND POWER HANDLING LIMITATIONS

BY BRUCE TRUMP (602) 746-7347

To achieve reliable power amplifier designs you must consider the stress on the amplifier compared to its power handling limitations. Power handling limits are specified by the Safe Operating Area (SOA) curves of the power amp. Stress on the amplifier depends on amplifier load and signal conditions which can be evaluated with straightforward techniques.

Consider the simplified power op amp shown in Figure 1. Output transistors Q_1 and Q_2 provide positive and negative output current to the load. I_{OUT} is shown flowing out of the amplifier, so Q_1 is supplying the output current. For positive output current, Q_2 is "off" and can be ignored.

The stress on Q_1 under load is related to the output current and the voltage across Q_1 (its collector-to-emitter voltage, V_{CE}). The product of these quantities, $I_{OUT} \bullet V_{CE}$, is the power dissipation of Q_1. This power dissipation is one important consideration, but the "safe operating area" provides a more complete description of the amplifier's limits.

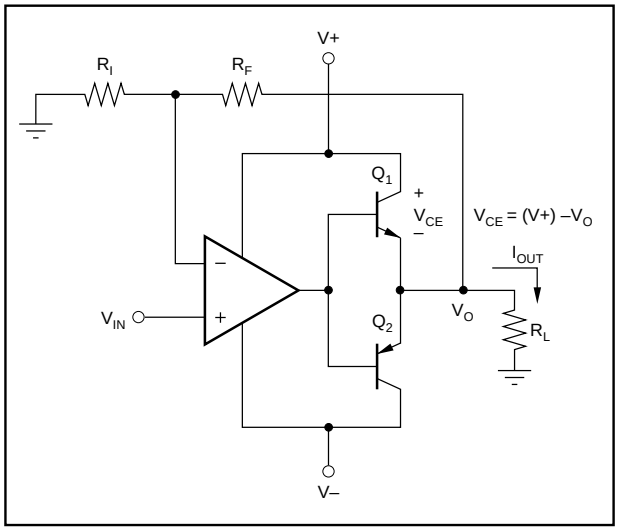

FIGURE 1. Simplified Power Op Amp Circuit.

SAFE OPERATING AREA

The power handling ability of a power transistor is characterized by its Safe Operating Area (SOA), Figure 2. The SOA curve shows permissible voltage, (V_{CE}) and current, (I_{OUT}). The maximum safe current is a function of V_{CE}. The characteristic shape of this curve has four distinct regions.

At low V_{CE}, maximum output current can be safely delivered to the load. Exceeding the maximum current in this region can overstress wire bonds or metallization on the die and destroy the device.

As V_{CE} is increased, the power dissipation of the transistor increases until self-heating raises the junction temperature to its maximum safe value. All points along this thermally limited region (dotted lines) produce the same power dissipation. $V_{CE} \bullet I_O$ is a constant 120W (at 25°C) in Figure 2. All points on this region of the curve produce the same maximum junction temperature. Exceeding the safe output current in this region may damage the transistor junction.

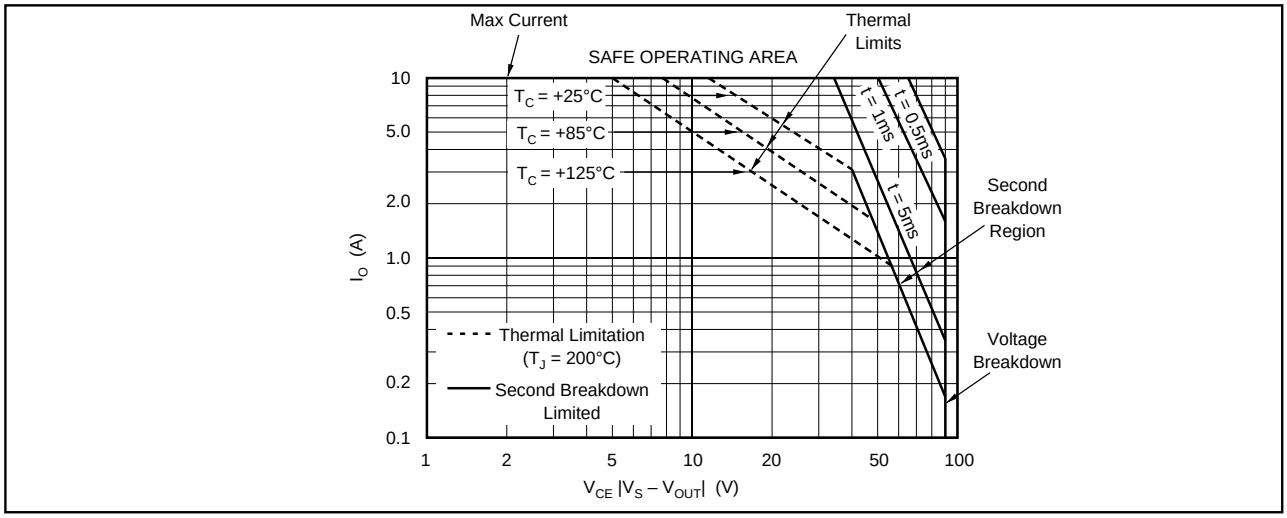

FIGURE 2. Safe Operating Area (SOA)— OPA502. (Figure 2 in PDS-1166)

©1993 Burr-Brown Corporation

Printed in U.S.A. April, 1993

As V_{CE} is further increased, beyond the thermally limited region, the safe output current decreases more rapidly. This so-called *second breakdown* region is a characteristic of bipolar output transistors. It is caused by the tendency of bipolar transistors to produce "hot spots"—points on the transistor where current flow concentrates at high V_{CE}. Exceeding the safe output current in the second breakdown region can produce a localized thermal runaway, destroying the transistor.

The final limit is the breakdown voltage of the transistor. This maximum power supply voltage cannot be exceeded.

Often, an SOA curve provides information showing how the safe output current varies with case temperature. This accounts for the affect of case temperature on junction temperature. Additional lines may show the maximum safe current for pulses of various durations according to the thermal time constants of a device.

The SOA curve should be interpreted as an absolute maximum rating. Operation at any point on the thermal limit portion of the curve produces the maximum allowable junction temperature—a condition not advised for long-term operation. Although operation on the second-breakdown portion of the curve produces lower temperature, this line is still an absolute maximum. Operation below this limit will provide better reliability (i.e.—better MTTF).

HEAT SINKING

In addition to assuring that an application does not exceed the safe operating area of the power amplifier, you must also assure that the amplifier does not overheat. To provide an adequate heat sink, you must determine the maximum power dissipation. The following discussions detail methods and considerations that affect SOA requirements and power dissipation and heat sink requirements.

SHORT-CIRCUITS

Some amplifier applications must be designed to survive a short-circuit to ground. This forces the full power supply voltage (either V+ or V–) across the conducting output transistor. The amplifier will immediately go into current limit. To survive this condition a power op amp with adjustable current limit must be set to limit at a safe level.

Example 1

What is the maximum current limit value which would protect against short-circuit to ground when OPA502 (Figure 2) power supplies are ±40V?

Answer—

If the case temperature could be held to 25°C, the current limit could be set to 3A, maximum. This would be unlikely, however, since the amplifier would dissipate 120W during short-circuit. It would require an "infinite" or ideal heat sink to maintain the case temperature at 25°C in normal room ambient conditions.

If the case temperature were held to 85°C, a 2A current limit would be safe. Power dissipation would be 80W, requiring a heat sink of 0.75°C/W—a large heat sink. (See Application Bulletin AB-038 for heat sink calculations.)

If the op amp must survive a short-circuit to one of the power supplies, for instance, the maximum V_{CE} would be the total of both supplies—a very demanding case.

Not all applications must (or can be) designed for short-circuit protection. It is a severe condition for a power amplifier. Additional measures such as fuses or circuitry to sense a fault condition can limit the time the amplifier must endure a short-circuit. This can greatly reduce the heat sink requirement.

An additional feature of the OPA502 and OPA512 power amplifiers, the optional fold-over circuit, can be connected on the current limit circuit. This can be set to reduce the current limit value when V_{CE} is large—exactly the condition that exists with a short-circuit. While useful in some applications, the foldover limiter can produce unusual behavior—especially with reactive loads. See the OPA502 data sheet for details.

RESISTIVE LOADS—DC OPERATION

Consider a power amplifier driving a resistive load. It is tempting to check for safe operation only at maximum output voltage and current. But this condition is not usually the most stressful.

At maximum output voltage, the voltage across the conducting transistor, V_{CE}, is at a minimum and the power dissipation is low. In fact, if the amplifier output could swing all the way to the power supply rail, the current output would be high, but the amplifier power dissipation would be zero because V_{CE} would be zero.

Figure 3 plots power from the power supply, load power, and amplifier power dissipation as a function of output voltage delivered to a resistive load. The power delivered to the load increases with the square of the output voltage ($P = I^2R$), while the power from the power supply increases linearly. The amplifier dissipation (equal to the difference of the first two curves) follows a parabola. If the amplifier output could swing all the way to the power supply rail (dotted portion of lines), all the power from the supply would be delivered to the load and the amplifier dissipation would be zero.

Peak amplifier dissipation occurs at an output voltage of (V+)/2, or 50% output. At this point, V_{CE} is (V+)/2 and I_O is $(V+)/(2R_L)$. The amplifier dissipation at this worst-case point is the product of V_{CE} and I_O, or $(V+)^2/(4R_L)$. Check this condition to assure that it is within the SOA of the amplifier. Also be sure that you have sufficient heat sinking for the calculated power dissipation to prevent overheating.

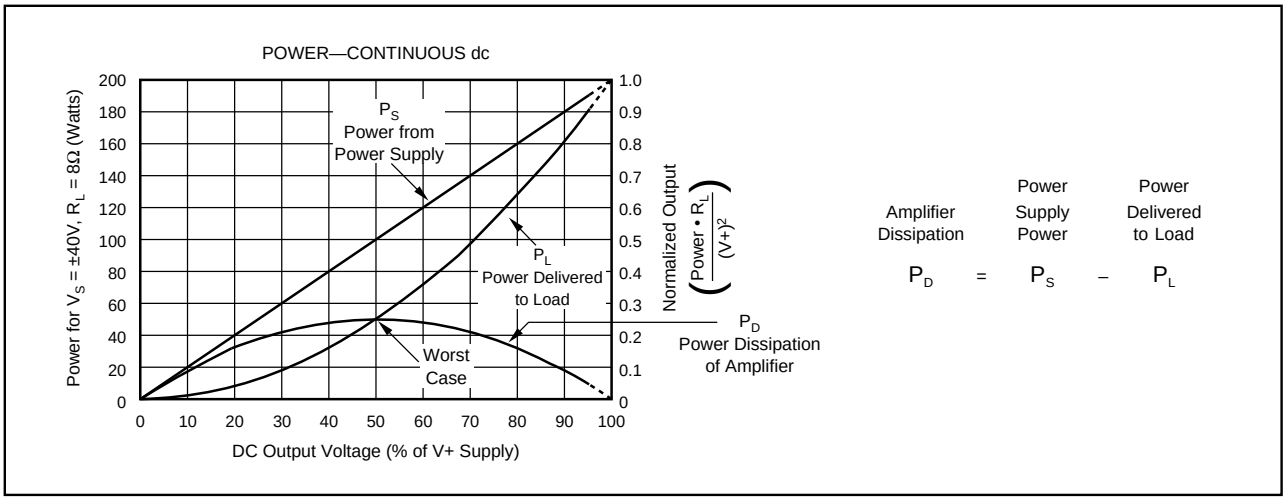

FIGURE 3. DC Power Dissipation, Resistive Load.

Example 2

An unbalanced power supply is often used with power amplifiers to allow a large unipolar output voltage. A +70V/–5V power supply is used with the OPA502 to drive a 30Ω load connected to ground. What is the worst case power dissipation and SOA requirement?

Answer—

The worst case occurs at half output, where V_O = 35V, and V_{CE} = 35V. The output current at this point would be 35V/30Ω = 1.17A which is within the SOA. Power dissipation would be 35V • 1.17A = 41W.

Other points to consider: The maximum output voltage would be approximately 65V, and 65V/30Ω = 2.17A. At this point, V_{CE} = 5V, a safe value on the SOA.

If the current limit were set to accommodate the full output of 2.17A, it would not be safe for short-circuits to ground. With a short-circuit to ground, V_{CE} = 70V where the maximum safe current is 0.4A.

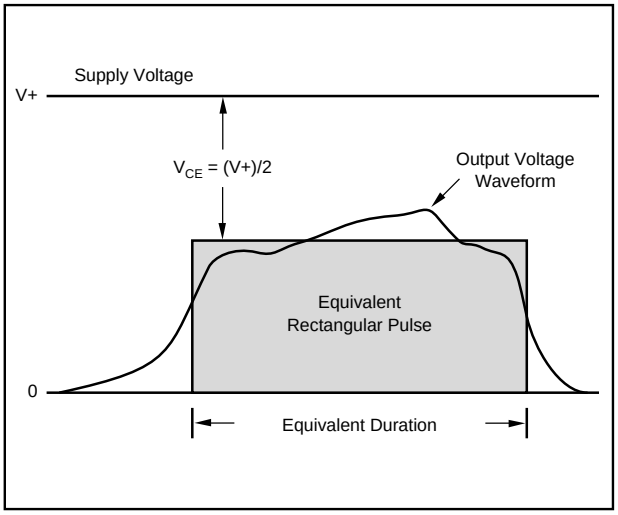

FIGURE 4. Pulsed Loads.

PULSED OPERATION

Some applications must handle pulses of current or varying current waveforms with a low duty-cycle. The SOA plot sometimes shows an ability to supply larger currents for short duration pulses. In Figure 2, the SOA limits are labeled for 5ms, 1ms and 0.5ms pulses. The duty-cycle must be low (approximately 5% or less), so that heating in the output transistor is given time to dissipate.

Unusual current waveforms can be estimated with an approximation to a rectangular pulse as shown in Figure 4. With a resistive load, the most stressful condition is when the output voltage is approximately half the supply voltage as shown. For other types of loads, evaluate any condition that produces significant load current and high V_{CE}. Applications which pulse currents beyond the dc SOA of the amplifier should be evaluated very carefully since they are pushing the limits of the device. Good reliability is achieved by taking a conservative approach to SOA limits.

AC SIGNALS

Imagine a time-varying signal that rapidly transverses the curves in Figure 3. The point of maximum dissipation is passed only briefly. If the signal changes rapidly enough (above 50Hz), the thermal time constant of the device causes the junction temperature to be determined by the *average* power dissipation. So, ac applications are generally less demanding than dc applications of the same peak voltage and current requirements.

If the signal is bipolar, such as a sine wave centered around zero, each output transistor "rests" for a half-cycle. The total amplifier dissipation is shared between the two output transistors, lowering the effective thermal resistance of the package.

If the instantaneous peak dissipation point is within the SOA of the amplifier, the primary concern is providing a sufficient heat sink to prevent overheating. Since this peak

condition is passed only briefly during an ac cycle, ac applications operate reliably, closer to the SOA limit.

Figure 5 shows the power curves for a power amplifier with ±40V supplies and an 8Ω resistive load. Again, powers are plotted with respect to the percentage of maximum voltage output. As with dc, the power delivered from the power supply increases linearly with output voltage and the power delivered to the load increases with the square of the output voltage. The power dissipated by the amplifier, P_D, is the difference of the first two curves. The shape of the P_D curve is similar to the dc signal case, but does not approach zero at 100% output voltage. This is because at full ac output voltage, the output is rapidly transversing the whole curve (0 to 100%) of Figure 4. Figure 5 shows the average dissipation of this dynamic condition.

Amplifier dissipation reaches a maximum when the peaks of the ac output waveform are approximately 63% of the power supply voltage. For this sine wave amplitude, the instantaneous output voltage hovers near the crucial half-supply-voltage value for a large portion of the ac cycle.

The normalized values read from the right side of the curve in Figure 5 can be scaled to any supply voltage and load resistance. To find your amplifier dissipation at a given signal level, multiply the reading taken from the right-side scale by $(V+)^2/R_L$.

AC applications rarely must endure continuous operation at the maximum dissipation point of Figure 5. An audio amplifier, for instance, with voice or music typically dissipates much less than this worst-case value, regardless of the signal amplitude. Yet, since a continuous sine wave signal of any amplitude is conceivable, this worst-case condition is a useful benchmark. Depending on the application, you might want to design for this condition.

REACTIVE LOADS—AC SIGNALS

Figure 6 shows the relationship of voltage and current in purely inductive load. The current lags the load voltage by 90°. At peak current, the load voltage is zero. This means that the amplifier must deliver peak current with the full V+ across the conducting transistor (V– for negative half-cycle peak current). The situation is equally severe for a capacitive load. Check for this condition of voltage and current on the SOA curve.

Once again, consider the curve in Figure 5. Power amplifier dissipation is equal to the power from the power supply minus the power delivered to the load. The power from the power supply, P_S, is the same whether the load impedance is resistive or reactive. But if the load is completely reactive (inductive or capacitive), the power delivered to the load is zero. So the power dissipated by the amplifier is equal to the power from the power supply. At full output this is approximately three times the worst-case amplifier dissipation with a resistive load!

A reactive load is a very demanding case, requiring a large heat sink compared to a resistive load. Fortunately, purely reactive loads are rare. An ac motor, for instance, could not be purely inductive, or it would be incapable of performing any mechanical work.

FINDING POWER DISSIPATION

Unusual loads and signals can be challenging to evaluate. Use the principle that amplifier power dissipation is equal to the power from the supplies minus the load power.

Power delivered from the power supplies can be measured as shown in Figure 7. The power from each supply is equal to the average current times its voltage. If the output waveform is asymmetrical, measure and calculate the positive

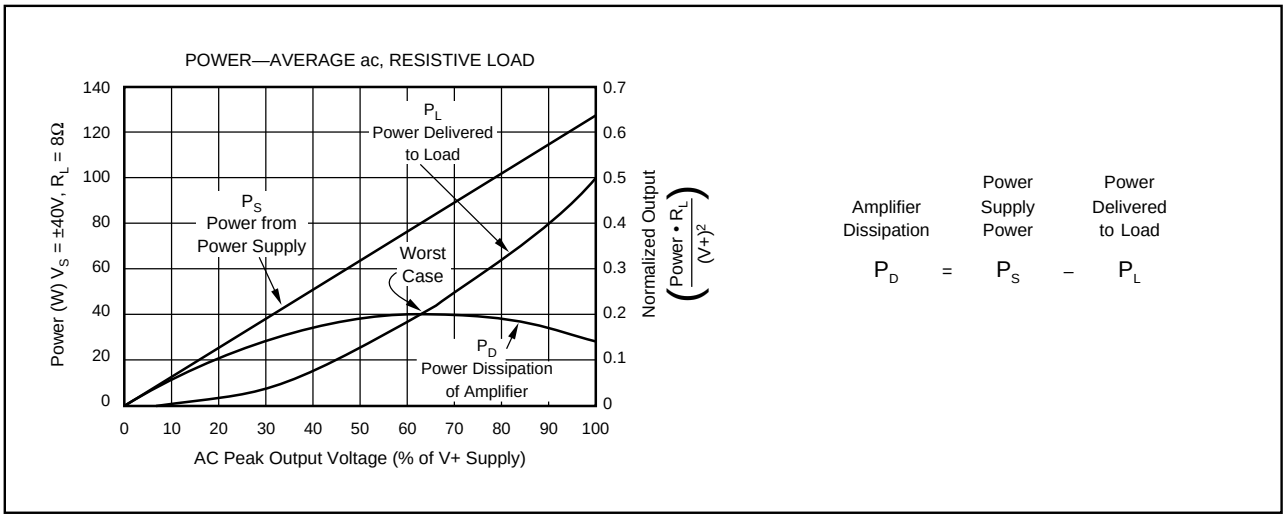

FIGURE 5. AC Power Dissipation, Resistive Load.

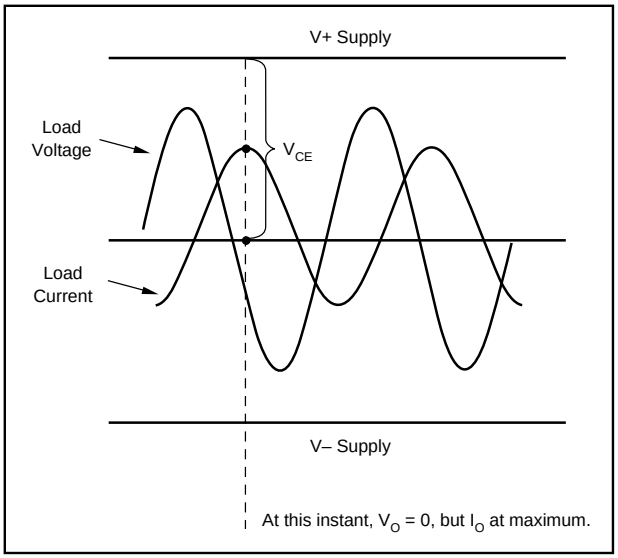

FIGURE 6. Voltage and Current Waveforms for Inductive Load.

and negative supplies separately and add the powers. If the waveform is symmetrical, you can measure one and multiply by two. Use an average-responding meter to measure the current. A simple D'Arsonval type meter movement with a current shunt works well. Do not use an rms-responding meter.

For sinusoids, finding the load power is easy—

$$P_{LOAD} = (I_O \text{ rms}) \bullet (V_O \text{ rms}) \bullet \cos(\theta)$$

Where θ is the phase angle between load voltage and current. (See Figure 8 for measurement methods.)

For complex waveforms, the load power is more difficult to measure. You may know something about your load which allows you to determine load power. If not, you can build a circuit that measures load power using a multiplier IC to continuously multiply load voltage and current. The average dc output of the multiplier is proportional to the average load power. See the MPY100 data sheet for a circuit to measure power with a multiplier.

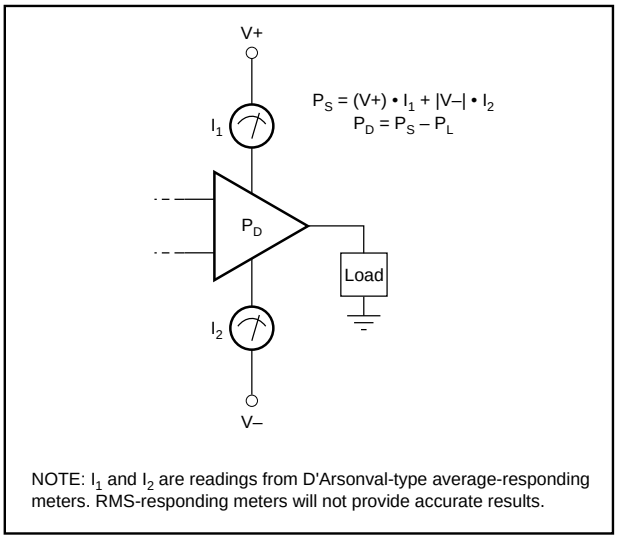

FIGURE 7. Measuring Power Supply Power.

UNUSUAL LOADS

Usually an op amp sources current to the load (Q_1 conducting, Figure 1), when the output voltage is positive. But depending on the type of load and the voltage to which it is referenced, an op amp might have to sink current (Q_2 conducting) with positive output voltage. Or, it could be required to source current with negative output voltage. In these cases, the voltage across the conducting transistor is larger than V+ or V–.

An example of this situation is a power op amp connected as a current source. The output of a current source might be connected to any voltage potential within its compliance range. Sourcing high current to a negative potential node would produce high dissipation and require good SOA.

MOTOR LOADS

Motor loads can be tricky to evaluate. They are like a reactive load since stored energy (mechanical) can be delivered back to the amplifier. Motor and load inertia can cause the amplifier to dissipate very high power when speed is changed.

Electro-mechanical systems can be modeled with electric circuits. This is a science in itself—beyond the scope of this discussion.

You can, however, measure the V-I demand of a motor (or any other load) under actual load conditions. Figure 8 shows a current sense resistor placed in series with the load. With load voltage and current displayed on separate oscilloscope traces, you can find the conditions of maximum stress. Be sure to consider the voltage across the conducting transistor, (V_{CE}), not the amplifier output voltage. The most stressful conditions may occur with moderate current, but low load voltage.

An X-Y type display of voltage and current (Figure 8B) may also help identify troublesome conditions. More demanding combinations of voltage and current are those that deviate from a straight-line resistive load.

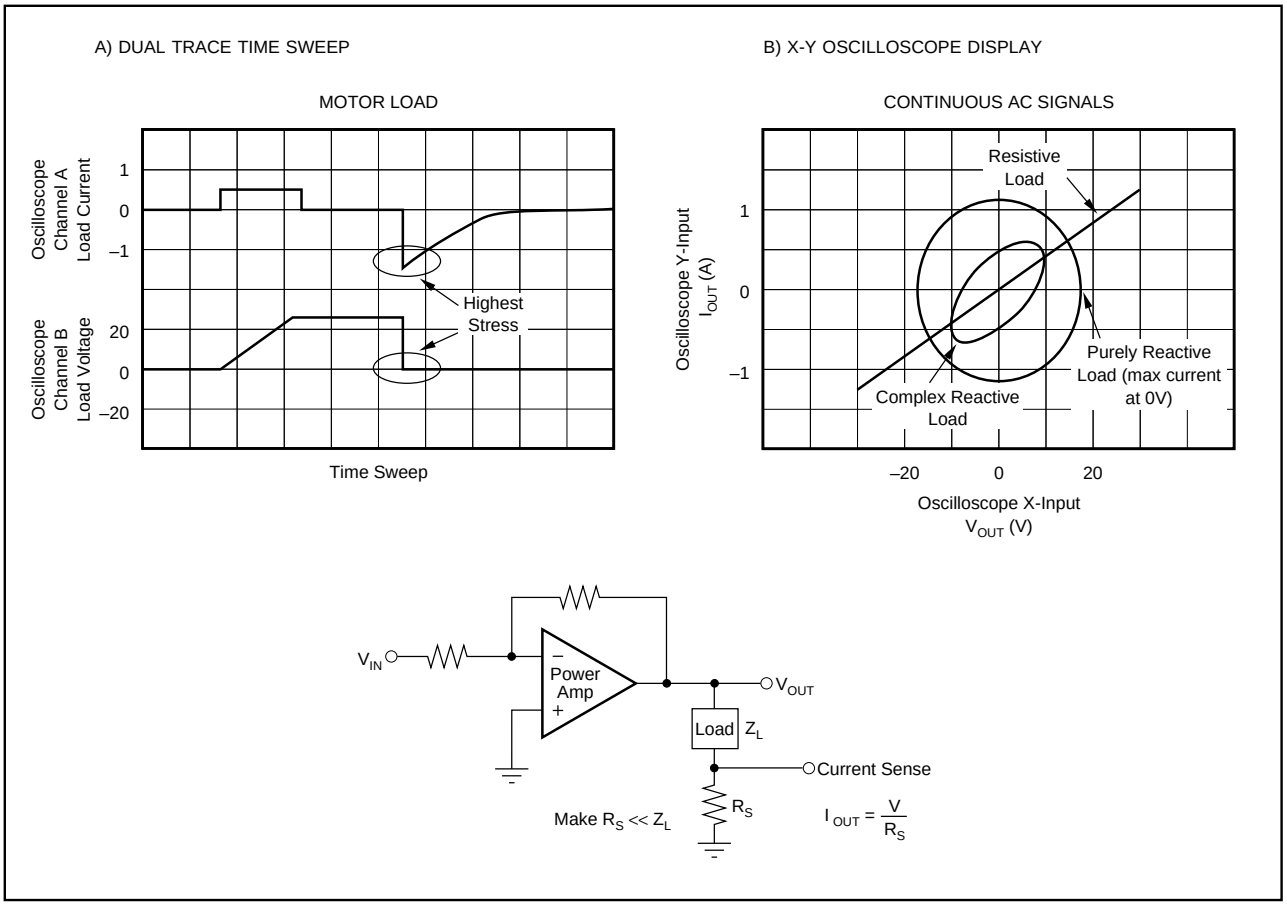

FIGURE 8. Voltage/Current Waveforms, Unusual Loads.