AAT3526/7/8
MicroPower™ Supervisory Circuit with Manual Reset

PowerManager™

General Description

The AAT3526/7/8 PowerManager products are members of AnalogicTech's Total Power Management IC™ (TPMIC™) product family. These microprocessor reset circuits are ideal for monitoring voltage supplies in portable systems, where extended battery life is critical. They provide a reliable, low-cost solution by eliminating external components. The AAT3526/7/8 products operate by monitoring the system power supply voltage. When the input voltage drops below a fixed threshold, the device asserts a reset signal for a minimum of 150ms after V_{CC} has risen back above the fixed threshold. They are guaranteed to operate down to 1.2V and designed to ignore fast line transients appearing on V_{CC}. The AAT3526/7/8 series is available with three output stage versions: AAT3526 push-pull active low output; AAT3527 push-pull active high output; and AAT3528 open drain active low output. The quiescent supply current is extremely low, typically 1µA, making this device ideal for portable battery-operated equipment.

AAT3526/7/8 devices are available in a Pb-free, 4-pin SOT143 package and are specified over the -40°C to +85°C operating temperature range.

Features

- Input Voltage Range: 1.2V to 5.5V
- Operation Down to 1.2V
- Extremely Low Quiescent Current: Less Than 2µA
- High Accuracy Detection Threshold: ±1.5%
- Monitor Power Supply Voltages
- Fixed Thresholds From 2.2V to 4.6V
- Minimum 150ms Reset Pulse Width With Fast Delay Time <20µs
- Debounced Manual Reset Input
- Available Output Configurations:
  - — Open-Drain Output
  - — CMOS Active High Output
  - — CMOS Active Low Output
- Temperature Range: -40°C to +85°C
- 4-Pin SOT143 Package
- 4kV ESD Rating

Applications

- Cell Phones
- Embedded Systems
- Intelligent Instruments
- Notebook Computers
- Portable Electronics

Typical Application

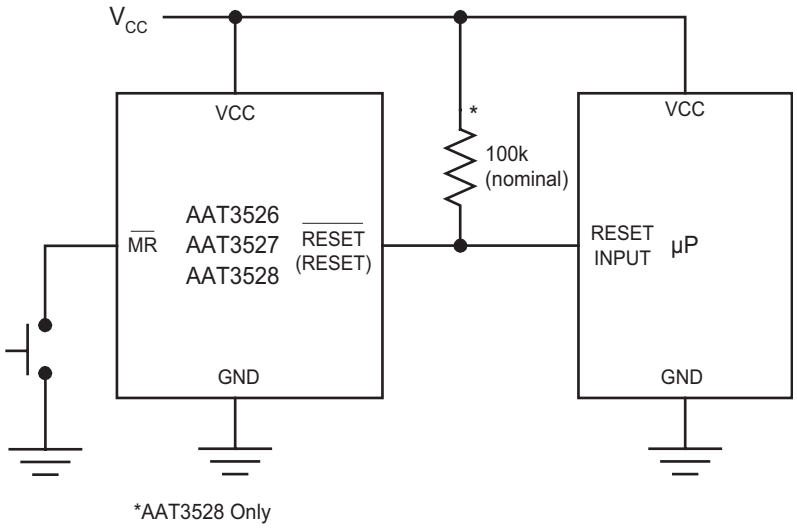

*AAT3528 Only

Pin Descriptions

AAT3526, 3527, 3528 (SOT143)

Pin #	Symbol	Function
1	GND	Ground connection.
2	RESET (AAT3527)	RESET output remains high while V_{CC} is below the reset threshold and remains so for a minimum of 150ms after V_{CC} raises above the reset threshold.
	$\overline{\text{RESET}}$ (AAT3526, AAT3528)	$\overline{\text{RESET}}$ output remains low while V_{CC} is below the reset threshold and remains so for a minimum of 150ms after V_{CC} raises above the reset threshold.
3	$\overline{\text{MR}}$	Manual reset active low input. A logic low signal on $\overline{\text{MR}}$ asserts a reset condition. Asserted reset continues as long as $\overline{\text{MR}}$ is low and for a minimum of 150ms after $\overline{\text{MR}}$ returns high.
4	VCC	Supply voltage (+1.2V to +5.5V). Due to extremely low operating current, it is recommended to place a 10nF capacitor between V_{CC} and GND.

Part Number Descriptions

Part Number	Output Type
AAT3526	Reset Output Push Pull Active Low with Delay
AAT3527	Reset Output Push Pull Active High with Delay
AAT3528	Reset Output Open Drain Active Low with Delay

Pin Configuration

SOT143
(Top View)

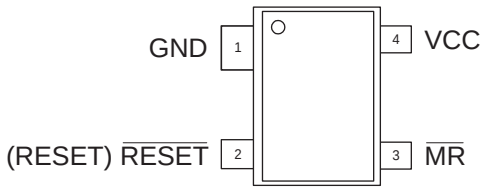

Absolute Maximum Ratings[1]

T_A = 25°C, unless otherwise noted.

Symbol	Description	Value	Units
V_{CC}	V_{CC} to GND	-0.3 to 5.5	V
V_{MR}	$\overline{MR}$ to GND	-0.3 to V_{CC} + 0.3	V
V_{RESET}	RESET to GND (Push-Pull Output)	-0.3 to V_{CC} + 0.3	V
	$\overline{RESET}$ to GND (Open Drain Output)	-0.3 to 5.5	
I_{VCC}, I_{MR}	Maximum Continuous Input Current	20	mA
I_{RESET}	RESET/$\overline{RESET}$ Current	20	mA
dVcc/dt	Rate of Rise of V_{CC}	100	V/µs
T_J	Operating Junction Temperature Range	-40 to 150	°C
T_{LEAD}	Maximum Soldering Temperature (at Leads) for 10s	300	°C

Thermal Information[2]

Symbol	Description	Value	Units
Θ_{JA}	Maximum Thermal Resistance	200	°C/W
P_D	Maximum Power Dissipation	320	mW

1. Stresses above those listed in Absolute Maximum Ratings may cause permanent damage to the device. Functional operation at conditions other than the operating conditions specified is not implied. Only one Absolute Maximum Rating should be applied at any one time.
2. Mounted on an FR4 board.

Electrical Characteristics

V_{IN} = 5V, T_A = -40°C to +85°C, unless otherwise noted. Typical values are T_A = 25°C, V_{CC} = 5V for 4.63/4.38V versions, V_{CC} = 3.3V for 3.08/2.93V versions, V_{CC} = 3.0V for 2.63V versions, and V_{CC} = 2.5V for 2.32/2.2V versions.

Symbol	Description	Conditions	Min	Typ	Max	Units
V_{CC}	Operation Voltage	T_A = 0°C to +70°C	1.0		5.5	V
		T_A = -40°C to +85°C	1.2		5.5	
I_Q	Quiescent Current	V_{CC} = 5.5V		1.05	3	µA
		V_{CC} = 3V		0.85	2	
V_{TH}	RESET Threshold[1]	T_A = 25°C	V_{TH} - 1.5%	V_{TH}	V_{TH} + 1.5%	V
		T_A = -40°C to +85°C	V_{TH} - 2.5%	V_{TH}	V_{TH} + 2.5%	
$\Delta V_{TH}/°C$	RESET Threshold Tempco			40		ppm/°C
t_P	RESET Propagation Delay	V_{CC} = V_{TH} to (V_{TH} - 100mV)		15		µs
t_{RDY}	RESET Active Timeout Period		150	250	400	ms
t_{MR}	$\overline{MR}$ Minimum Pulse Width		10			µs
MRGI	$\overline{MR}$ Glitch Immunity			100		ns
t_{MD}	$\overline{MR}$ to Reset Propagation Delay			0.5		µs
V_{IH}	$\overline{MR}$ Input Threshold (High)	V_{CC} = $V_{TH(MAX)}$, $V_{TH} \geq$ 4.38V	2.3			V
		V_{CC} = $V_{TH(MAX)}$, V_{TH} < 4.38V	0.7 × V_{CC}			
V_{IL}	$\overline{MR}$ Input Threshold (Low)	V_{CC} = $V_{TH(MAX)}$, $V_{TH} \geq$ 4.38V			0.8	V
		V_{CC} = $V_{TH(MAX)}$, V_{TH} < 4.38V			0.25 × V_{CC}	
R_{MR}	$\overline{MR}$ Pull-Up Resistance		30	65	90	kΩ
V_{OL}	RESET Low Output Voltage AAT3526, AAT3528	I_{SINK} = 1.2mA, V_{CC} = $V_{TH(min)}$, $V_{TH} \leq$ 3.08V, RESET Asserted			0.3	V
		I_{SINK} = 3.2mA, V_{CC} = $V_{TH(min)}$, V_{TH} > 3.08V, RESET Asserted			0.4	
V_{OH}	RESET High Output Voltage AAT3526	I_{SOURCE} = 800µA, V_{TH} > 3.08V, V_{CC} > $V_{TH\ (max)}$	V_{CC} - 1.5			V
		I_{SOURCE} = 500µA, $V_{TH} \leq$ 3.08V, V_{CC} > $V_{TH\ (max)}$	0.8 V_{CC}			
V_{OL}	RESET Low Output Voltage AAT3527	I_{SINK} = 1.2mA, V_{CC} > $V_{TH\ (max)}$ $V_{TH} \leq$ 3.08V, RESET Not Asserted			0.3	V
		I_{SINK} = 3.2mA, V_{CC} > $V_{TH\ (max)}$ V_{TH} > 3.08V, RESET Not Asserted			0.4	
V_{OH}	RESET High Output Voltage AAT3527	I_{SOURCE} = 500µA, V_{CC} > 2.1V, RESET Asserted	0.8V_{CC}			V
		I_{SOURCE} = 50µA, V_{CC} > 1.2V, RESET Asserted	0.8V_{CC}			
I_{DOFF}	RESET Leakage Current, AAT3528	V_{CC} > V_{TH}			1	µA

1. See Ordering Information for factory-trimmed reset thresholds.

Typical Characteristics

Supply Current vs. Temperature

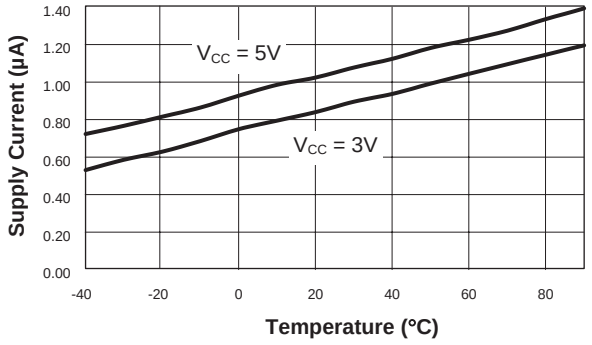

Normalized Reset Threshold vs. Temperature

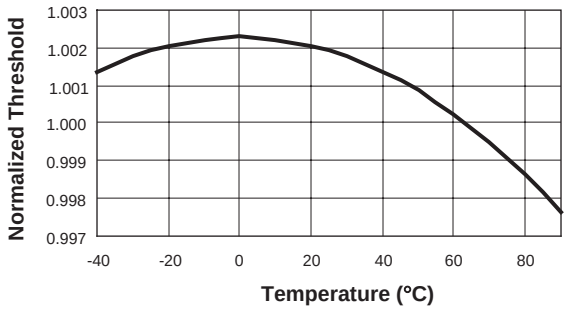

Power-Up Reset Timeout vs. Temperature

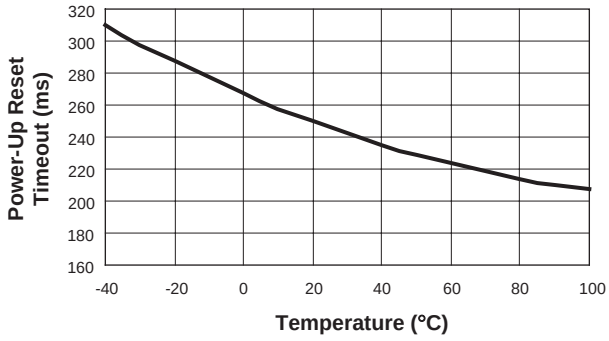

Power-Down Reset Propagation Delay vs. Temperature

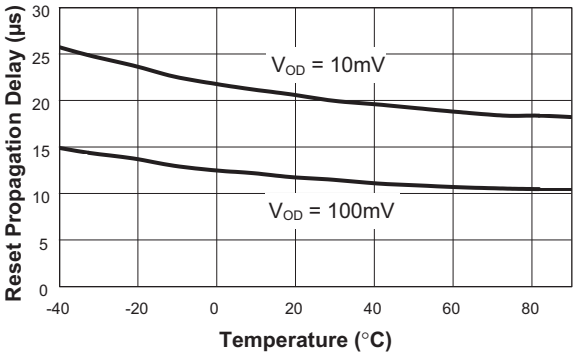

Maximum Transient Duration vs. Reset Threshold Overdrive

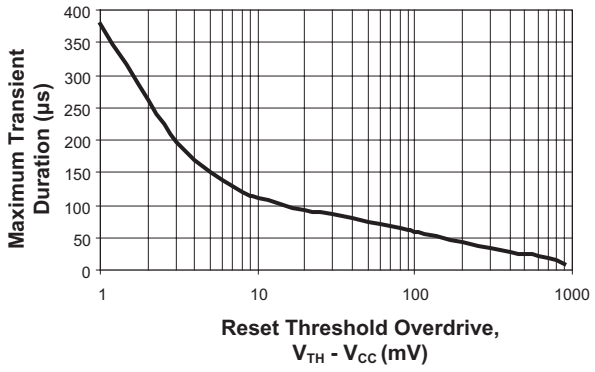

Functional Block Diagram

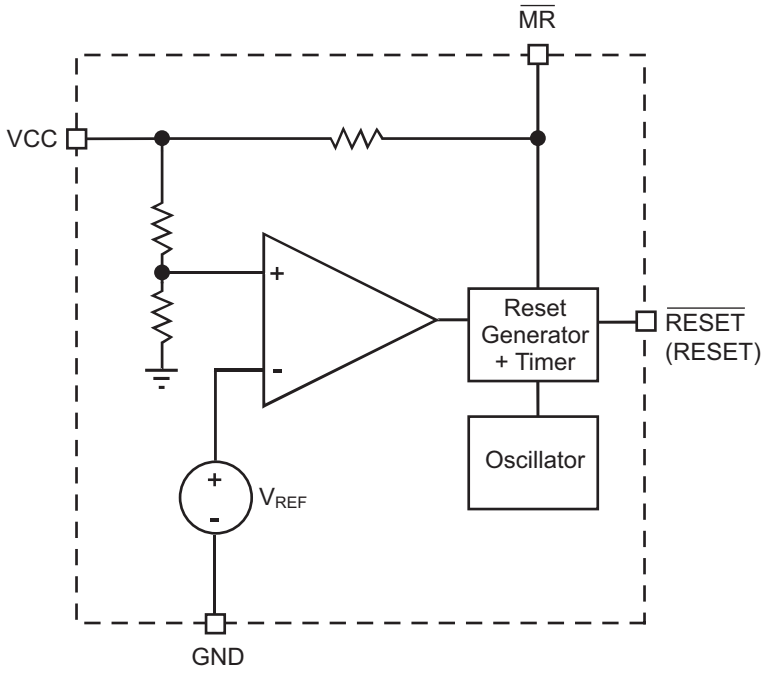

Functional Description

General

During start-up, the reset pin on a microprocessor ensures that it is fully reset and starts up in a known condition. The AAT3526/7/8 series of microprocessor reset devices monitor the supply voltage to a microprocessor and assert a reset signal whenever the V_{CC} voltage falls below a factory-programmed threshold. This threshold is accurate within ±1.5% at 25ºC and within ±2.5% over the entire operating temperature range. The reset signal remains asserted for a minimum of 150ms after V_{CC} has risen above the threshold, as shown in Figure 1.

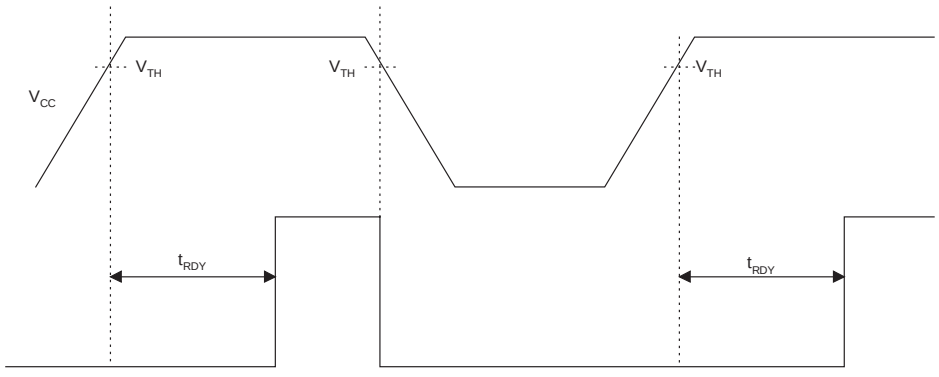

Figure 1: Reset Timing Diagram.

Applications Information

Reset Output Options

The AAT3528 has an active low open drain output and the AAT3526/7 have a push-pull output. The AAT3528 may be used in multiple voltage systems with an external pull-up resistor. This allows the AAT3528 to interface to microprocessors with higher supply voltages up to 5.5V (Figure 2). In the event of a power-down or brown-out condition, the reset signal remains valid until the V_{CC} drops below 1.2V. To ensure validity down to ground, an external 100kΩ resistor should be connected between the RESET output and GND.

Manual Reset Input

A logic low signal on $\overline{MR}$ asserts a reset condition. Reset continues to be asserted as long as $\overline{MR}$ is low and for a minimum of 150ms after $\overline{MR}$ returns high. This input is internally pulled up to V_{CC} via a 65kΩ resistor, so leaving the pin unconnected is acceptable if the manual reset function is not needed. The $\overline{MR}$ input is internally debounced which allows the use of a mechanical switch. It should be a normally-open momentary switch connected from $\overline{MR}$ to GND. Additionally, the $\overline{MR}$ pin can be driven from TTL, CMOS, or open drain logic outputs.

Supply Voltage Transient Behavior

In some cases, fast negative transients of short duration can appear on the V_{CC} power supply. The AAT3526/7/8 series devices provide some immunity to line transients which can generate invalid reset pulses. Figure 1 shows typical behavior to short duration pulses versus RESET comparator overdrive. As shown in the Maximum Transient Duration vs. Reset Threshold Overdrive graph, when the transient voltage becomes larger, the time allowed before asserting a reset becomes shorter (e.g., typically a transient of 100mV below the reset threshold would have to present for more than 50µs to cause a reset). Immunity can be increased by the addition of a small bypass capacitor of 0.1µF connected as close to the V_{CC} pin as possible.

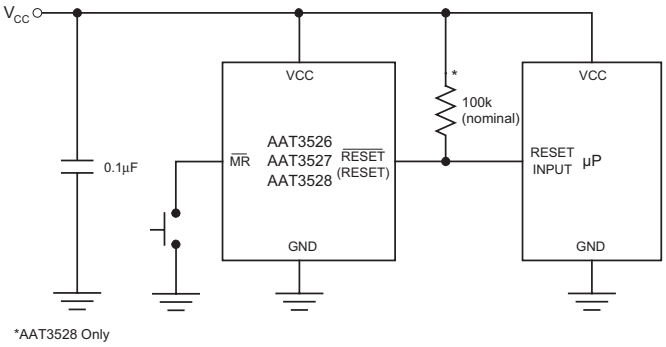

Figure 2: Using Recommended Bypass Capacitor.

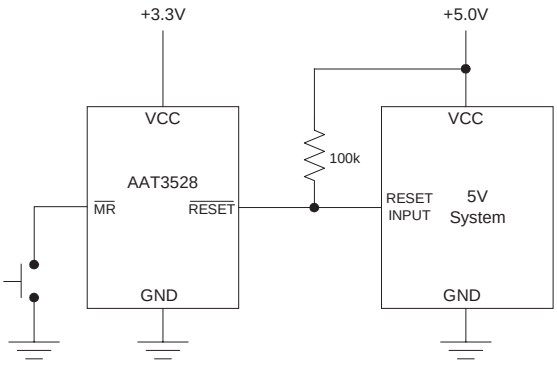

Figure 3: Using AAT3528 Open Drain Output with Multiple Supplies.

Ordering Information and Factory-Trimmed Reset Thresholds[1]

Ordering Part Number[2]	Marking[3]	Reset Threshold Voltage, V_{TH} (V)				
		T_A = 25°C			T_A = -40°C to +85°C	
		Min	Typ	Max	Min	Max
AAT3526ICX-2.32-200-T1 AAT3527ICX-2.32-200-T1 AAT3528ICX-2.32-200-T1	**NOXYY**	2.285	2.320	2.355	2.262	2.378
AAT3526ICX-2.63-200-T1 AAT3527ICX-2.63-200-T1 **AAT3528ICX-2.63-200-T1**	**DNXYY** **DRXYY**	2.591	2.630	2.669	2.564	2.696
AAT3526ICX-2.93-200-T1 **AAT3527ICX-2.93-200-T1** **AAT3528ICX-2.93-200-T1**	**DOXYY** **DQXYY** **FQXYY**	2.886	2.930	2.974	2.857	3.003
AAT3528ICX-3.00-200-T1	**FIXYY**	2.955	3.000	3.045	2.925	3.075
AAT3526ICX-3.08-200-T1 **AAT3527ICX-3.08-200-T1** **AAT3528ICX-3.08-200-T1**	**EQXYY** **FHXYY** **FJXYY**	3.034	3.080	3.126	3.003	3.157
AAT3526ICX-4.38-200-T1 **AAT3527ICX-4.38-200-T1** AAT3528ICX-4.38-200-T1	**GCXYY** **HLXYY**	4.314	4.380	4.446	4.271	4.490
AAT3526ICX-4.63-200-T1 **AAT3527ICX-4.63-200-T1** AAT3528ICX-4.63-200-T1	**DPXYY** **HMXYY**	4.561	4.630	4.699	4.514	4.746

Pb-free

All AnalogicTech products are offered in Pb-free packaging. The term "Pb-free" means semiconductor products that are in compliance with current RoHS standards, including the requirement that lead not exceed 0.1% by weight in homogeneous materials. For more information, please visit our website at http://www.analogictech.com/pbfree.

1. Contact local Sales Office for custom trimmed options.
2. Sample stock is generally held on all part numbers listed in **BOLD**.
3. XYY = assembly and date code.

Package Information

SOT143

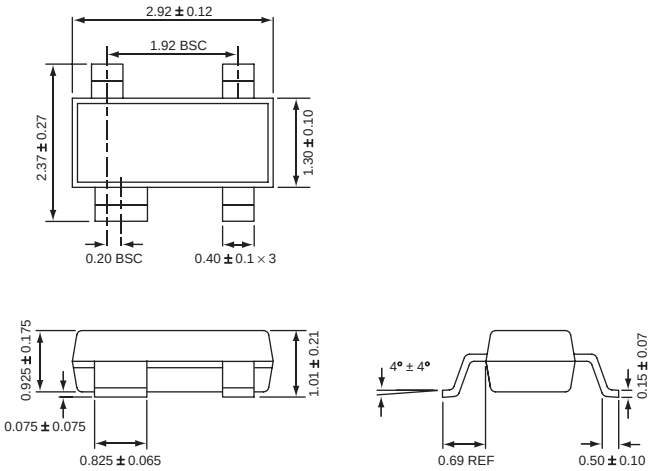

All dimensions in millimeters.

© Advanced Analogic Technologies, Inc.

AnalogicTech cannot assume responsibility for use of any circuitry other than circuitry entirely embodied in an AnalogicTech product. No circuit patent licenses, copyrights, mask work rights, or other intellectual property rights are implied. AnalogicTech reserves the right to make changes to their products or specifications or to discontinue any product or service without notice. Customers are advised to obtain the latest version of relevant information to verify, before placing orders, that information being relied on is current and complete. All products are sold subject to the terms and conditions of sale supplied at the time of order acknowledgement, including those pertaining to warranty, patent infringement, and limitation of liability. AnalogicTech warrants performance of its semiconductor products to the specifications applicable at the time of sale in accordance with AnalogicTech's standard warranty. Testing and other quality control techniques are utilized to the extent AnalogicTech deems necessary to support this warranty. Specific testing of all parameters of each device is not necessarily performed.

Advanced Analogic Technologies, Inc.
830 E. Arques Avenue, Sunnyvale, CA 94085
Phone (408) 737-4600
Fax (408) 737-4611