AAT3520/2/4

MicroPower™ Microprocessor Reset Circuit

PowerManager™

General Description

The AAT3520 series of PowerManager products is part of AnalogicTech's Total Power Management IC™ (TPMIC™) product family. These microprocessor reset circuits are ideal for monitoring voltage supplies in portable systems, where extended battery life is critical. They provide a low-cost, reliable solution by eliminating the need for external components. The AAT3520 series operates by monitoring the system power supply voltage. When the input voltage drops below a fixed threshold, the device asserts a reset signal for a fixed time period after V_{CC} has risen back above the fixed threshold; 30ms and 150ms minimum periods are available. The AAT3520 product series is guaranteed to operate down to 1.2V and is designed to ignore fast line transients appearing on V_{CC}. The AAT3520 series is available with three output stage versions: AAT3520 push-pull active high output; AAT3522 push-pull active low output; and AAT3524 open drain active low output. The quiescent supply current is extremely low, typically 1µA, making it ideal for portable battery-operated equipment.

The AAT3520/2/4 are available in a Pb-free, 3-pin SOT23 package and are specified over the -40°C to +85°C operating temperature range.

Features

- Input Voltage Range: 1.2V to 5.5V
- Operation Down to 1.2V
- Extremely Low Quiescent Current: <2µA
- High Accuracy Detection Threshold: ±1.5%
- Monitor Power Supply Voltages
- Fixed Thresholds from 2.2V to 4.6V
- Reset Pulse Width Options
  - — Minimum 30ms or 150ms
  - — Fast Propagation Delay <20µs
- Available Output Configurations:
  - — Open-Drain Output
  - — CMOS Active High Output
  - — CMOS Active Low Output
- Temperature Range: -40°C to +85°C
- 3-Pin SOT23 Package
- 4kV ESD Rating

Applications

- Cell Phones
- Embedded Systems
- Intelligent Instruments
- Notebook Computers
- Portable Electronics

Typical Application

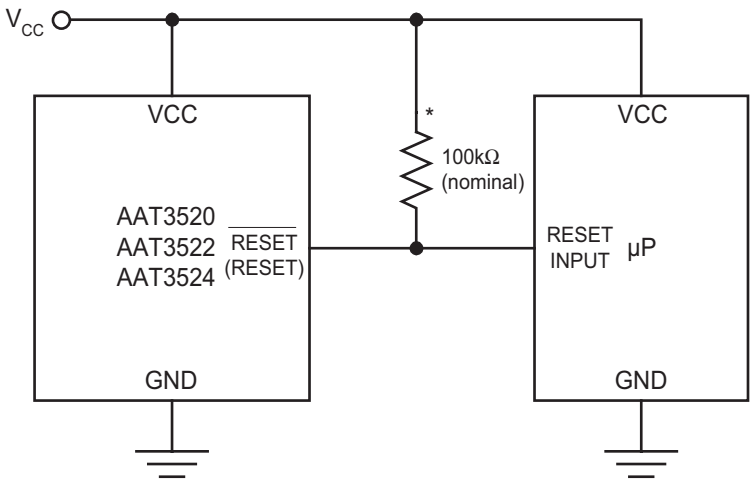

*AAT3524 Only

Pin Descriptions

Pin #	Symbol	Function
1	GND	Ground connection.
2	RESET (AAT3520)	RESET output remains high while V_{CC} is below the reset threshold and remains so for a fixed time period after V_{CC} raises above the reset threshold.
	$\overline{\text{RESET}}$ (AAT3522, AAT3524)	$\overline{\text{RESET}}$ output remains low while V_{CC} is below the reset threshold and remains so for a fixed time period after V_{CC} raises above the reset threshold.
3	VCC	Supply voltage (+1.2V to +5.5V). Due to extremely low operating current, place a 10nF capacitor between VCC and GND.

Part Number Descriptions

Part Number	Part Description
AAT3520	Reset Output Push Pull Active High with Delay
AAT3522	Reset Output Push Pull Active Low with Delay
AAT3524	Reset Output Open Drain Active Low with Delay

Pin Configuration

SOT23-3
(Top View)

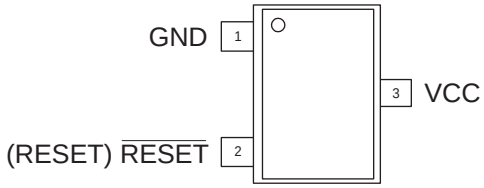

Absolute Maximum Ratings[1]

T_A = 25°C, unless otherwise noted.

Symbol	Description	Value	Units
V_{CC}	V_{CC} to GND	-0.3 to 5.5	V
V_{RESET}	RESET to GND (Push-Pull Output)	-0.3 to V_{CC} + 0.3	V
	$\overline{RESET}$ to GND (Open Drain Output)	-0.3 to 5.5	
I_{MAX}	Maximum Continuous Input Current	20	mA
I_{RESET}	RESET/$\overline{RESET}$ Current	20	mA
dV_{CC}/d_t	Rate of Rise of V_{CC}	100	V/µs
T_J	Operating Junction Temperature Range	-40 to 150	°C
T_{LEAD}	Maximum Soldering Temperature (at Leads) for 10s	300	°C

Thermal Information[2]

Symbol	Description	Value	Units
Θ_{JA}	Maximum Thermal Resistance	200	°C/W
P_D	Maximum Power Dissipation	320	mW

1. Stresses above those listed in Absolute Maximum Ratings may cause permanent damage to the device. Functional operation at conditions other than the operating conditions specified is not implied. Only one Absolute Maximum Rating should be applied at any one time.
2. Mounted on an FR4 board.

Electrical Characteristics

V_{IN} = 5V, T_A = -40°C to +85°C, unless otherwise noted. Typical values are at T_A = 25°C; V_{CC} = 5V for 4.63/4.38V versions; V_{CC} = 3.3V for 3.08/2.93V versions; V_{CC} = 3.0V for 2.63V version; V_{CC} = 2.5V for 2.32/2.2V versions.

Symbol	Description	Conditions	Min	Typ	Max	Units
V_{CC}	Operation Voltage	T_A = 0ºC to +70ºC	1.0		5.5	V
		T_A = -40ºC to +85ºC	1.2		5.5	
I_Q	Quiescent Current	V_{CC} = 5.5V		1.05	3	µA
		V_{CC} = 3V		0.85	2	
V_{TH}	RESET Threshold (Table 1)	T_A = 25ºC	V_{TH} - 1.5%	V_{TH}	V_{TH} + 1.5%	V
		T_A = -40ºC to +85ºC	V_{TH} - 2.5%	V_{TH}	V_{TH} + 2.5%	
$\Delta V_{TH}/°C$	RESET Threshold Temperature Coefficient			40		ppm/°C
t_P	RESET Propagation Delay	V_{CC} = V_{TH} to (V_{TH} - 100mV)		15		µs
t_{RDY}	RESET Active Timeout Period	-50 Option	30	50	100	ms
		-200 Option	150	250	400	
V_{OL}	RESET Low Output Voltage AAT3522, AAT3524	I_{SINK} = 1.2mA, V_{CC} = $V_{TH(min)}$, V_{TH} ≤ 3.08V, RESET Asserted			0.3	V
		I_{SINK} = 3.2mA, V_{CC} = $V_{TH(min)}$, V_{TH} > 3.08V, RESET Asserted			0.4	
V_{OH}	RESET High Output Voltage AAT3522	I_{SOURCE} = 800µA, V_{TH} > 3.08V, V_{CC} > $V_{TH\ (max)}$	V_{CC} -1.5			V
		I_{SOURCE} = 500µA, V_{TH} ≤ 3.08V, V_{CC} > $V_{TH\ (max)}$	0.8 V_{CC}			
V_{OL}	RESET Low Output Voltage AAT3520	I_{SINK} = 1.2mA, V_{CC} > $V_{TH\ (max)}$, V_{TH} ≤ 3.08V, RESET Not Asserted			0.3	V
		I_{SINK} = 3.2mA, V_{CC} > $V_{TH\ (max)}$, V_{TH} > 3.08V, RESET Not Asserted			0.4	
V_{OH}	RESET High Output Voltage AAT3520	I_{SOURCE} = 500µA, V_{CC} > 2.1V, RESET Asserted	0.8V_{CC}			V
		I_{SOURCE} = 50µA, V_{CC} > 1.2V, RESET Asserted	0.8V_{CC}			
I_{DOFF}	RESET Leakage Current AAT3524	V_{CC} > V_{TH}			1	µA

Typical Characteristics

Supply Current vs. Temperature

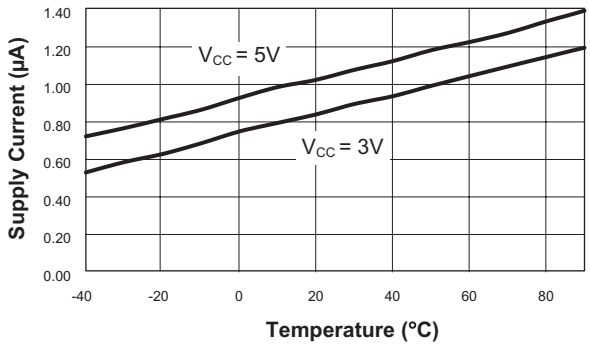

Normalized Reset Threshold vs. Temperature

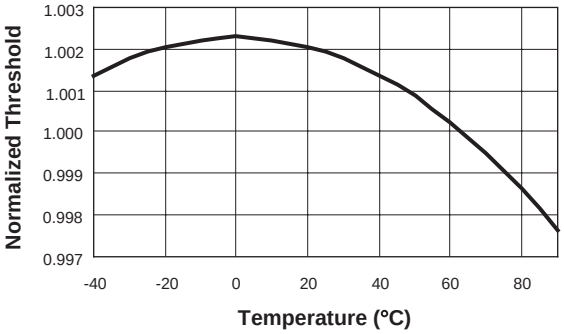

Normalized Power-Up Reset Timeout vs. Temperature

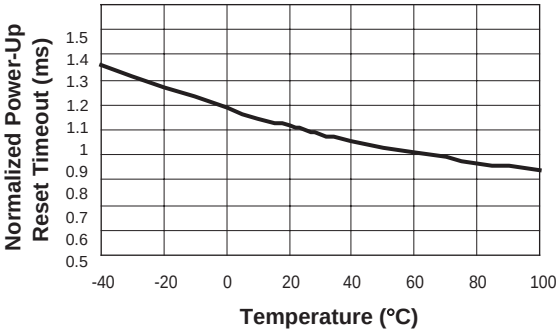

Power-Down Reset Propagation Delay vs. Temperature

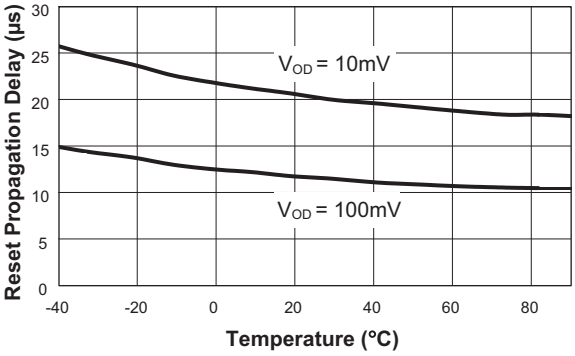

Maximum Transient Duration vs. Reset Threshold Overdrive

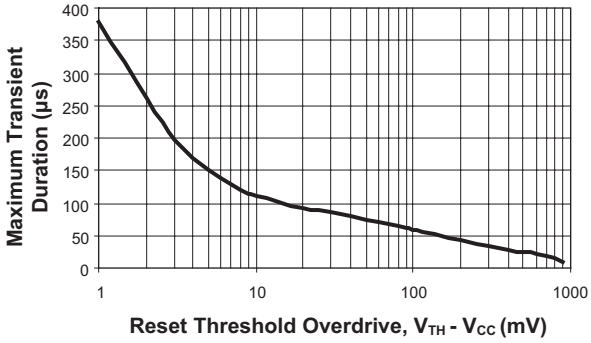

Functional Block Diagram

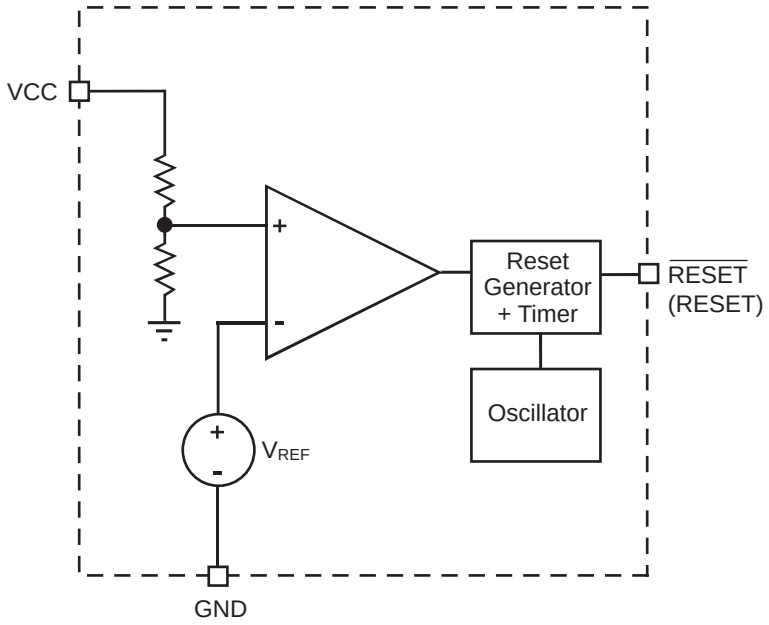

Functional Description

General

During start-up, the reset pin on a microprocessor ensures that it is fully reset and starts up in a known condition. The AAT3520 series of microprocessor reset devices monitor the supply voltage to a microprocessor and assert a reset signal whenever the V_{CC} voltage falls below a factory-programmed threshold. This threshold is accurate within ±1.5% at 25ºC and within ±2.5% over the entire operating temperature range. The reset signal remains asserted for a fixed time period (t_{RDY}) after V_{CC} has risen above the threshold, as shown in Figure 1. See Ordering Information for available RESET active timeout periods

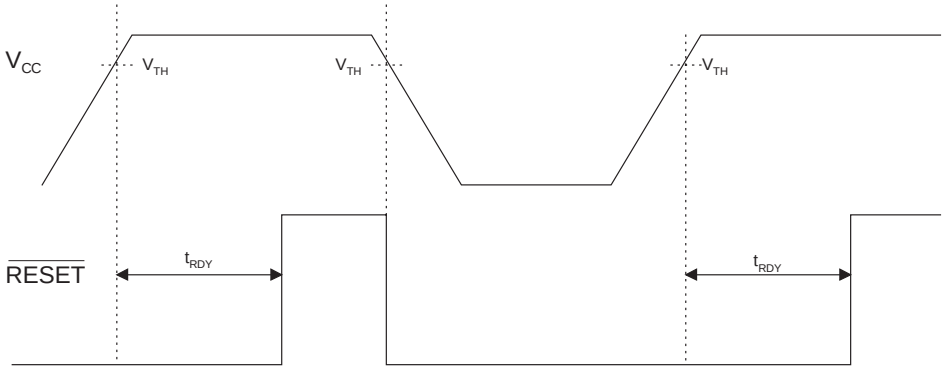

Figure 1: Reset Timing Diagram (AAT3522, AAT3524).

Applications Information

Reset Output Options

The AAT3524 has an active low open drain output and the AAT3520/2 have a push-pull output. The AAT3524 may be used in multiple voltage systems with an external pull-up resistor. This allows the AAT3524 to interface to microprocessors with higher supply voltages up to 5.5V (Figure 3). In the event of a power down or brown-out condition, the reset signal remains valid until the V_{CC} drops below 1.2V. To ensure validity down to ground, an external 100kΩ resistor should be connected between the RESET output and GND.

Supply Voltage Transient Behavior

In some cases, fast negative transients of short duration can appear on the V_{CC} power supply. The AAT3520 series devices provide some immunity to line transients which can generate invalid reset pulses. Figure 1 shows typical behavior to short duration pulses versus RESET comparator overdrive. As shown in the Maximum Transient Duration vs. Reset Threshold Overdrive graph, when the transient voltage becomes larger, the time allowed before asserting a reset becomes shorter (i.e., typically a transient of 100mV below the reset threshold would have to present for more than 50µs to cause a reset). Immunity can be increased by the addition of a small bypass capacitor of 0.1µF connected as closely to the V_{CC} pin as possible.

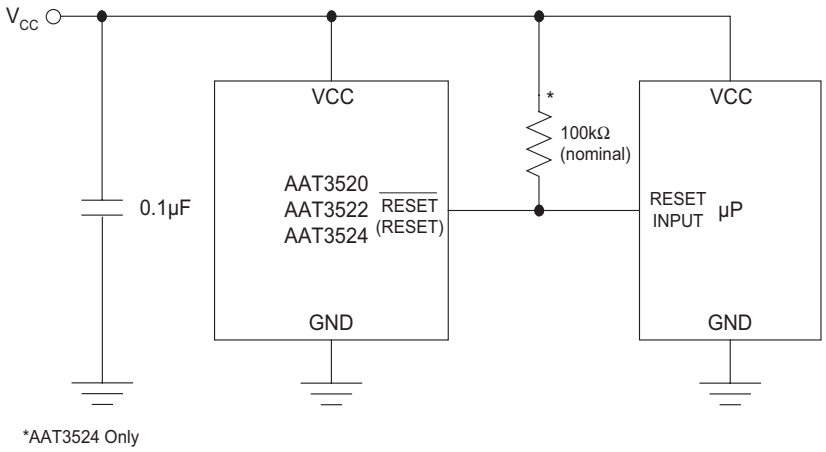

Figure 2: Using Recommended Bypass Capacitor.

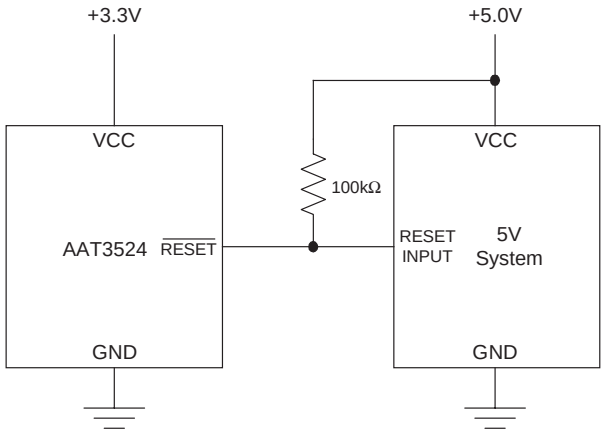

Figure 3: Using AAT3524 Open Drain Output with Multiple Supplies.

Factory Trimmed Reset Thresholds[1] and Ordering Information

Ordering Part Number[2]	Marking[3]	Minimum Reset Active (ms)	Reset Threshold Voltage, V_{TH} (V)				
			T_A = 25°C			T_A = -40°C to +85°C	
			Min	Typ	Max	Min	Max
AAT3522IGY-2.20-200-T1	DBXYY	150	2.167	2.200	2.233	2.145	2.255
AAT3520IGY-2.32-200-T1	DTXYY	150	2.285	2.320	2.355	2.262	2.378
AAT3522IGY-2.32-200-T1		150					
AAT3524IGY-2.32-200-T1		150					
AAT3522IGY-2.45-200-T1	DXXYY	150	2.413	2.450	2.487	2.389	2.511
AAT3520IGY-2.63-200-T1	GNXYY	150	2.591	2.630	2.669	2.564	2.696
AAT3522IGY-2.63-200-T1	CAXYY	150					
AAT3524IGY-2.63-200-T1	CWXYY	150					
AAT3520IGY-2.93-200-T1	CZXYY	150	2.886	2.930	2.974	2.857	3.003
AAT3522IGY-2.93-50-T1	FVXYY	30					
AAT3522IGY-2.93-200-T1	CCXYY	150					
AAT3524IGY-2.93-200-T1	FPXYY	150					
AAT3520IGY-3.08-50-T1	EFXYY	30	3.034	3.080	3.126	3.003	3.157
AAT3520IGY-3.08-200-T1	CNXYY	150					
AAT3522IGY-3.08-50-T1	CYXYY	30					
AAT3522IGY-3.08-200-T1	CBXYY	150					
AAT3524IGY-3.08-200-T1	BGXYY	150					
AAT3520IGY-4.38-200-T1	FUXYY	150	4.314	4.380	4.446	4.271	4.490
AAT3522IGY-4.38-200-T1		150					
AAT3524IGY-4.38-200-T1	IVXYY	150					
AAT3520IGY-4.63-200-T1	HKXYY	150	4.561	4.630	4.699	4.514	4.746
AAT3522IGY-4.63-200-T1	DAXYY	150					
AAT3524IGY-4.63-200-T1	DUXYY	150					



All AnalogicTech products are offered in Pb-free packaging. The term "Pb-free" means semiconductor products that are in compliance with current RoHS standards, including the requirement that lead not exceed 0.1% by weight in homogeneous materials. For more information, please visit our website at http://www.analogictech.com/pbfree.

1. Contact Local Sales Office for custom trimmed options.
2. Sample stock is generally held on part numbers listed in **BOLD**.
3. XYY = assembly and date code.

Package Information

SOT23-3

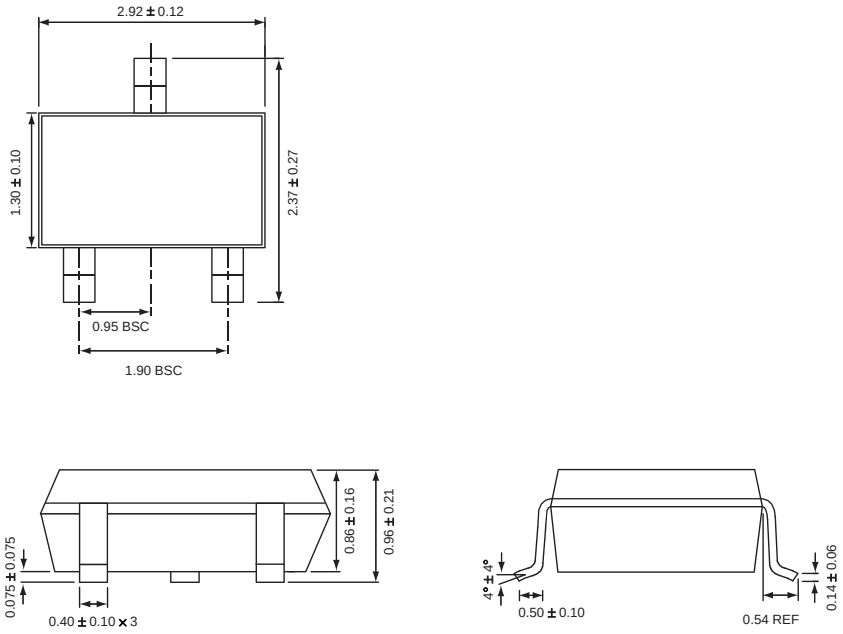

All dimensions in millimeters.

© Advanced Analogic Technologies, Inc.

AnalogicTech cannot assume responsibility for use of any circuitry other than circuitry entirely embodied in an AnalogicTech product. No circuit patent licenses, copyrights, mask work rights, or other intellectual property rights are implied. AnalogicTech reserves the right to make changes to their products or specifications or to discontinue any product or service without notice. Customers are advised to obtain the latest version of relevant information to verify, before placing orders, that information being relied on is current and complete. All products are sold subject to the terms and conditions of sale supplied at the time of order acknowledgement, including those pertaining to warranty, patent infringement, and limitation of liability. AnalogicTech warrants performance of its semiconductor products to the specifications applicable at the time of sale in accordance with AnalogicTech's standard warranty. Testing and other quality control techniques are utilized to the extent AnalogicTech deems necessary to support this warranty. Specific testing of all parameters of each device is not necessarily performed.

Advanced Analogic Technologies, Inc.
830 E. Arques Avenue, Sunnyvale, CA 94085
Phone (408) 737-4600
Fax (408) 737-4611