AAT1265

SwitchReg™

Low Voltage 2MHz Step-Up DC/DC Converter in SC70JW Package

General Description

The AAT1265 is designed for single-cell or dual-cell alkaline, NiMH, or NiCd or single-cell lithium-ion/polymer (Li-Ion) battery-powered applications. It is a high efficiency, synchronous, fixed frequency, step-up converter with true output disconnect during shutdown (<1.0µA), start-up inrush current limit, and short-circuit protection.

The high 2MHz switching frequency and completely integrated control circuitry minimize the total solution footprint area while maintaining excellent regulation, ripple, and transient response throughout the full load range.

Light load switching frequency modulation and low quiescent current maintain high efficiency performance for light load and sleep mode conditions.

With a 1A peak switch current limit, the AAT1265 is capable of delivering 100mA to the load with a single AA cell, up to 250mA from a dual AA cell, or up to 400mA from a single-cell lithium-ion battery. The device has a 1.0V start-up voltage with operation down to 0.8V.

The AAT1265 is available in a Pb-free, space-saving 2.0x2.1mm 8-pin SC70JW package and is rated over the -40°C to +85°C temperature range.

Features

- 100mA Output from a Single AA Cell Input
- 250mA Output from a Dual AA Cell Input
- 400mA Output from a Single Lithium-Ion Cell Input
- V_{IN} Operation Range: 0.8V to V_{OUT}
- Up to 93% Efficiency
- Low Start-Up Voltage: 1.0V Typical
- Internal Synchronous Rectifier
- Current Mode Control with Internal Feedback and Compensation
- 2MHz Fixed Switching Frequency
- 1A Current Limit
- Maintains High Efficiency Over the Output Current Range for Improved Battery Life
- Low 40µA No Load Bias Current
- True Load Disconnect
- Short-Circuit and Over-Current Protection
- Inrush Current Limit and Soft Start
- Low Shutdown Current: <1.0µA
- -40°C to +85°C Temperature Range
- 2.0x2.1mm SC70JW-8 Package

Applications

- Bluetooth® Headsets
- Digital Cameras
- Medical Instruments
- Mobile Handsets
- MP3 and Portable Music Players

Typical Application

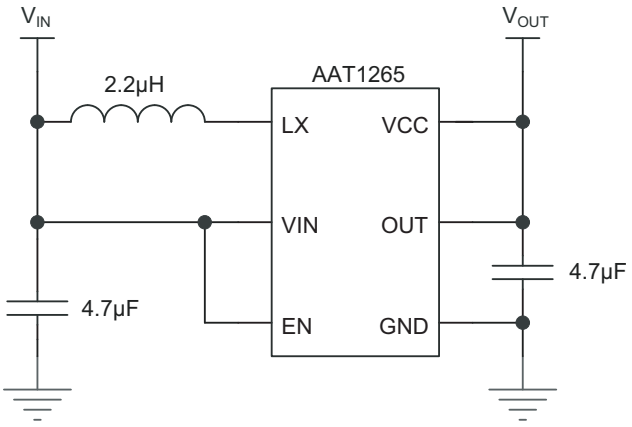

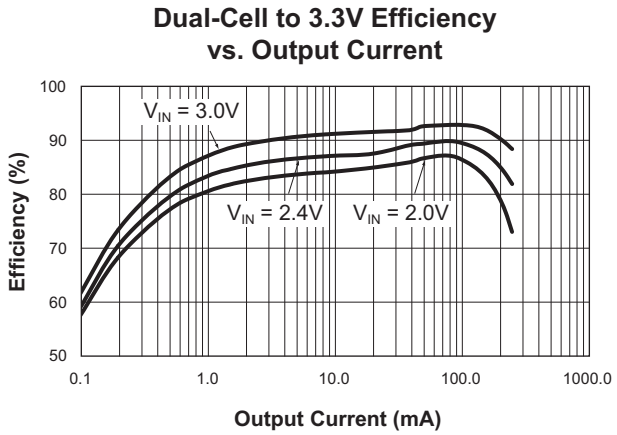

Pin Descriptions

Pin #	Symbol	Function
1	VCC	Bias supply voltage after start-up and feedback to the output voltage error amplifier.
2	EN	Enable pin. Logic high enables the IC. Logic low disables the IC and disconnects the load from the input. Shutdown current is <1µA.
3	VIN	Battery input voltage. Supplies the IC at start-up.
4	LX	Inductor connection. Ties to the drains of the P-channel synchronous rectifier and the N-channel MOSFET switch.
5	OUT	Boost converter output voltage; connects to the P-channel synchronous MOSFET source. Bypass with ceramic capacitor to GND.
6, 7, 8	GND	Signal and power ground. Connect output capacitor return.

Pin Configuration

SC70JW-8
(Top View)

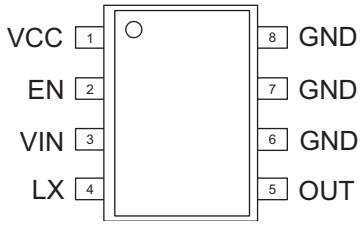

Absolute Maximum Ratings

Symbol	Description	Value	Units
V_N	VIN, OUT, VCC, EN, LX to GND	-0.3 to 6.0	V
T_J	Operating Junction Temperature Range	-40 to 150	°C
T_{LEAD}	Maximum Soldering Temperature (at leads, 10 sec)	300	°C

Thermal Characteristics[1]

Symbol	Description	Value	Units
θ_{JA}	Maximum Thermal Resistance	160	°C/W
P_D	Maximum Power Dissipation	625	mW

1. Mounted on an FR4 board.

Electrical Characteristics[1]

V_{IN} = 1.2V, T_A = -40°C to +85°C, unless otherwise noted. Typical values are T_A = 25°C.

Symbol	Description	Conditions	Min	Typ	Max	Units
V_{IN}	Minimum Start-Up Voltage	I_{LOAD} = 1mA		1.0		V
	Operating Input Voltage Range		0.8		V_{OUT}	
V_{OUT}	Output Voltage Accuracy	V_{IN} = 0.8V to 2.5V, PWM Mode	V_{OUT} - 0.1		V_{OUT} + 0.1	V
		V_{IN} = 2.5V to 4.2V, PWM Mode; 5.0V Version Only	V_{OUT} - 0.15		V_{OUT} + 0.15	V
I_Q	Quiescent Supply Current (Light Load Operation)[2]	No Load		40	70	µA
I_{SHDN}	Shutdown Current	EN = 0V, V_{IN} = 5.5V			1.0	µA
$R_{DS(ON)H}$	PMOS On-Resistance	T_A = 25°C		750		mΩ
$R_{DS(ON)L}$	NMOS On-Resistance	T_A = 25°C		400		mΩ
I_{LIMIT}	NMOS Current Limit			1.0		A
I_{PFM}	PFM Light Load Current Threshold			20		mA
η	Efficiency	I_{OUT} = 50mA, L = 2.2µH		82		%
$\Delta V_{OUT}/V_{OUT}$	Load Regulation	I_{LOAD} = 0 to 100mA		1.5		%
$\Delta V_{OUT}/V_{OUT}/\Delta V_{IN}$	Line Regulation	V_{IN} = 0.8V to 2.5V		0.2		%/V
		V_{IN} = 2.5V to 4.2V; 5.0V Version Only		0.16		
F_{OSC}	Switching Frequency	T_A = 25°C	1.8	2.0	2.2	MHz
D_{TYMAX}	Maximum Duty Cycle			90		%
$V_{TH(L-IN)}$	Logic Input Low Threshold for EN				0.4	V
$V_{TH(H-IN)}$	Logic Input High Threshold for EN		1.0			V

1. The AAT1265 is guaranteed to meet performance specifications over the -40°C to +85°C operating temperature range and is assured by design, characterization, and correlation with statistical process controls.
2. $I_Q = I_{Q_VOUT} + I_{Q_VCC}$.

Typical Characteristics

Single-Cell to 3.3V Efficiency

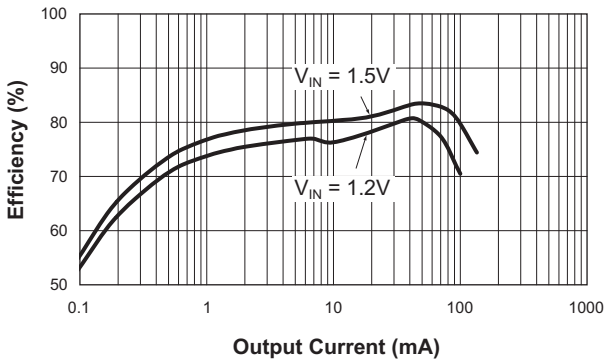

Dual-Cell to 3.3V Efficiency

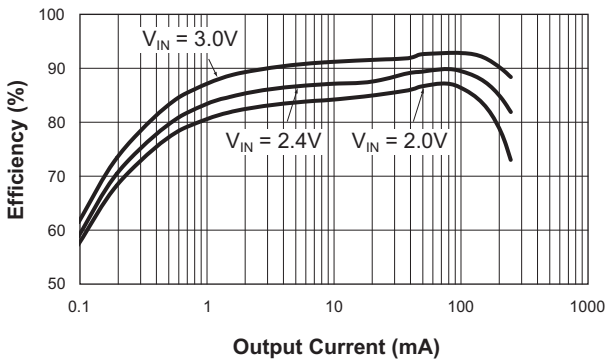

Single-Cell Load Regulation
(V_{OUT} = 3.3V)

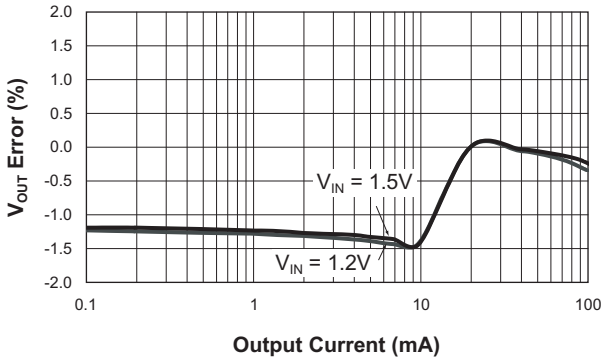

Dual-Cell Load Regulation
(V_{OUT} = 3.3V)

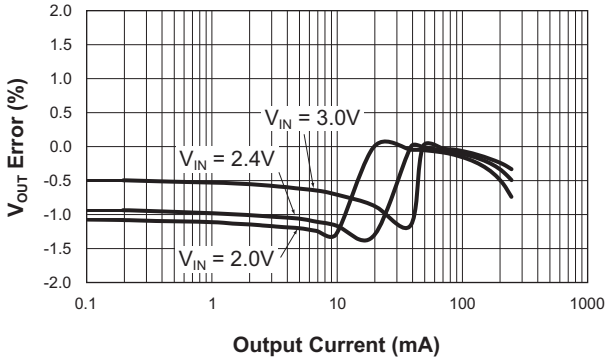

Li-Ion/Polymer to 5V Efficiency

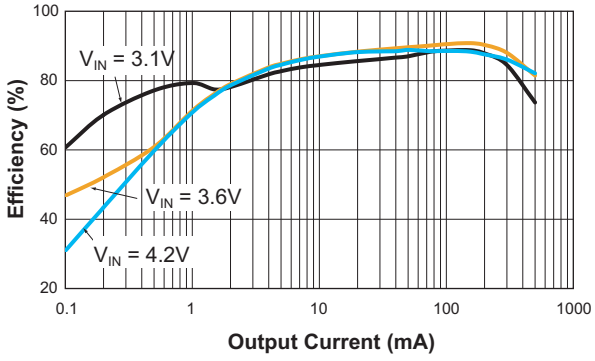

Li-Ion/Polymer Load Regulation
(V_{OUT} = 5V)

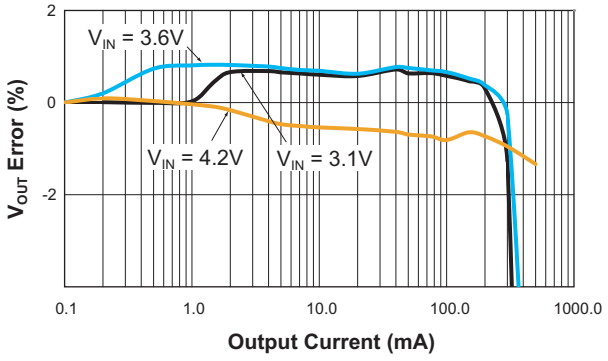

Typical Characteristics

3.3V to 5V Efficiency

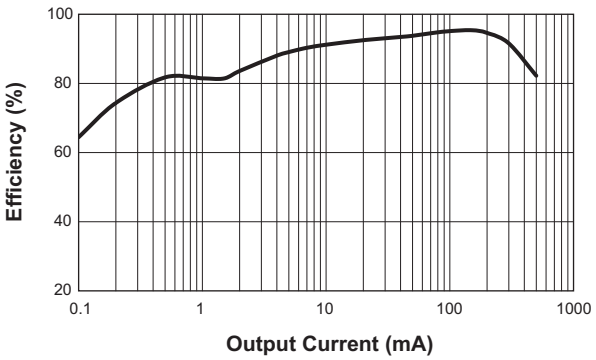

3.3V to 5V Load Regulation

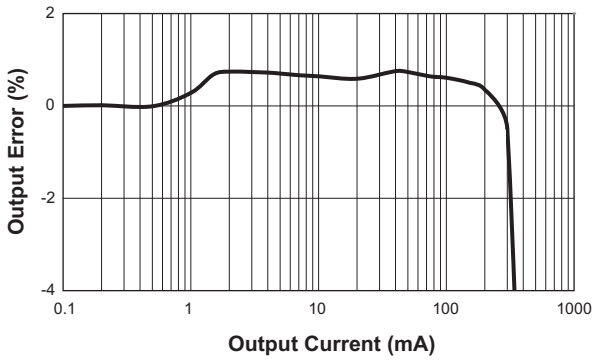

Minimum Start-Up Voltage vs. Load Current
(V_{OUT} = 3.3V)

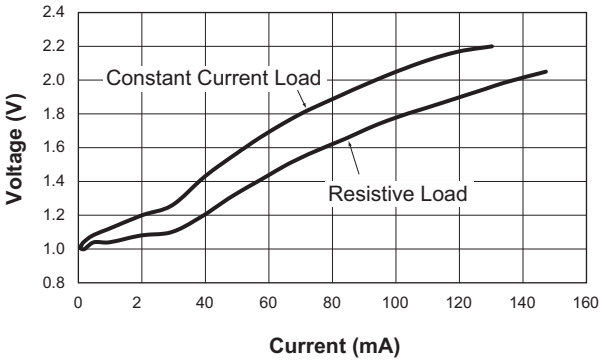

Light Load Mode Output Current Threshold vs. Input Voltage

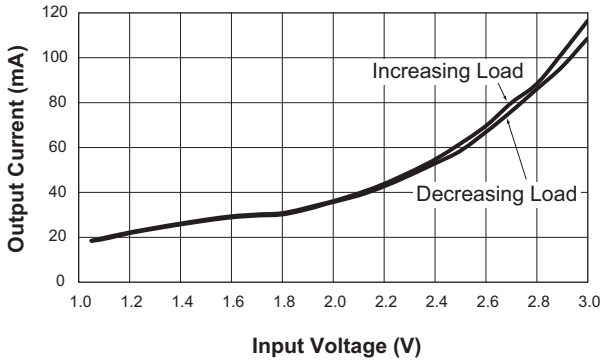

No Load Input Current vs. Input Voltage
(V_{OUT} = 3.3V)

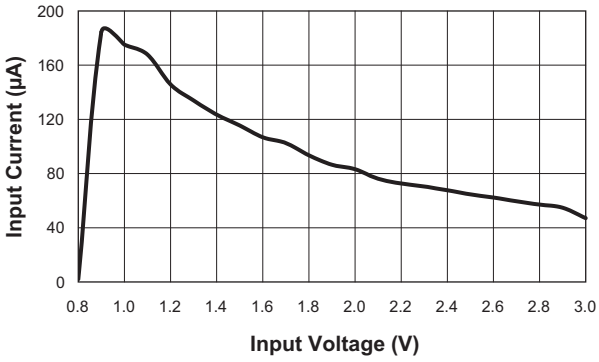

No Load Input Current vs. Input Voltage
(V_{OUT} = 5V)

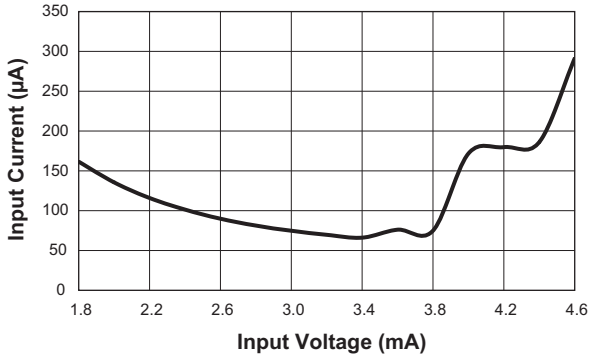

Typical Characteristics

Switching Frequency vs. Temperature

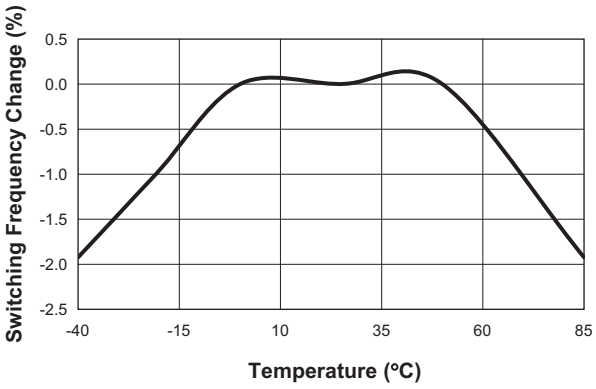

Maximum Load Current Capacity for a 4% Drop in Output Voltage vs. Input Voltage
(V_{OUT} = 3.3V)

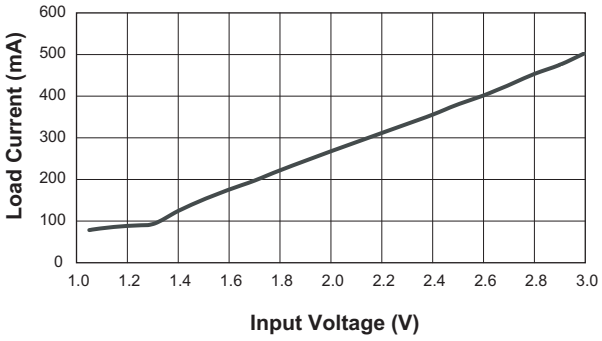

Maximum Load Current Capability for a 4% Drop in Output Voltage vs. Input Voltage
(V_{OUT} = 5V)

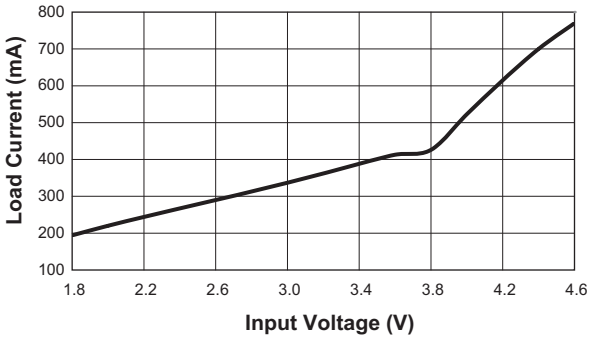

Load Transient Response
(V_{IN} = 1.2V; L = 2.2µH; C_O = 4.7µF)

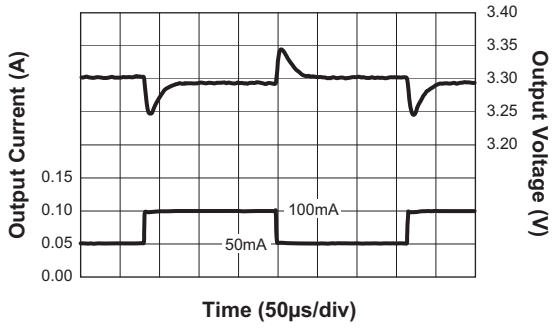

Output Voltage vs. Temperature
(V_{IN} = 1.5V; I_{OUT} = 10mA; V_{OUT} = 3.3V)

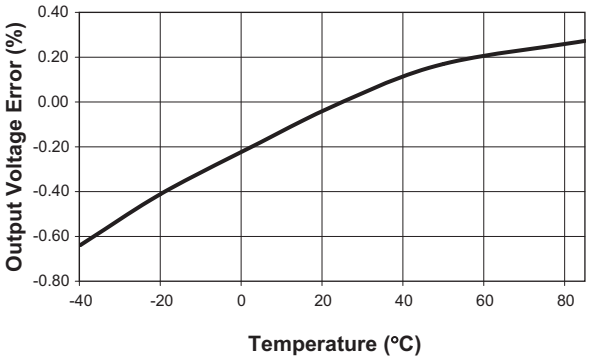

Line Transient Response
(I_{OUT} = 50mA; L = 2.2µH; C_{OUT} = 4.7µF)

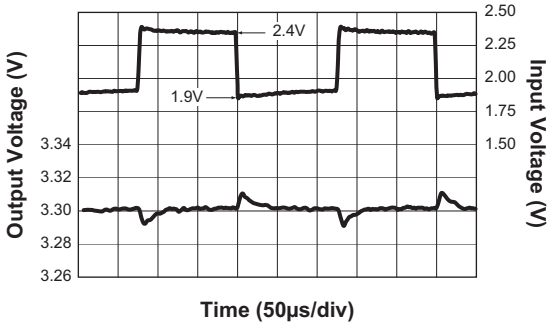

Typical Characteristics

Soft-Start Inrush Current
(V_{IN} = 1.2V; I_{OUT} = 40mA; V_{OUT} = 3.3V)

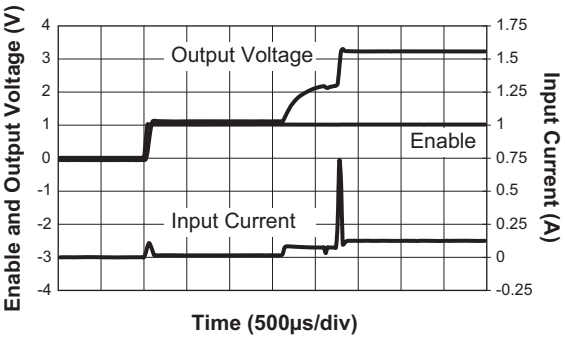

Soft-Start Inrush Current
(V_{IN} = 2.4V; I_{OUT} = 100mA; V_{OUT} = 3.3V)

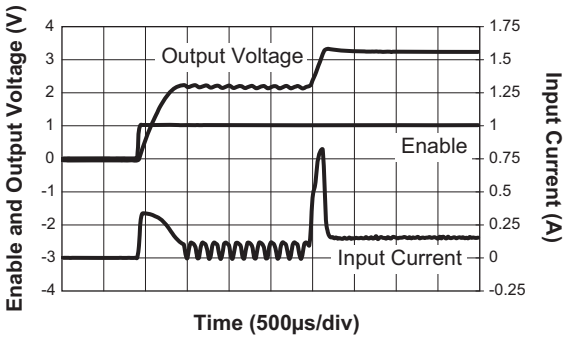

Full Load Output Ripple
(V_{IN} = 1.2V; I_{OUT} = 10mA; V_{OUT} = 3.3V)

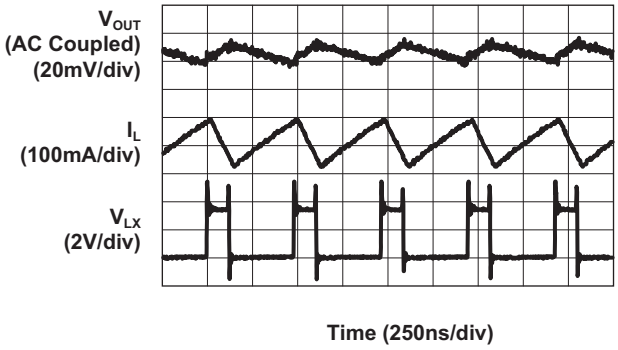

Light Load Output Ripple
(V_{IN} = 1.2V; I_{OUT} = 100mA; V_{OUT} = 3.3V)

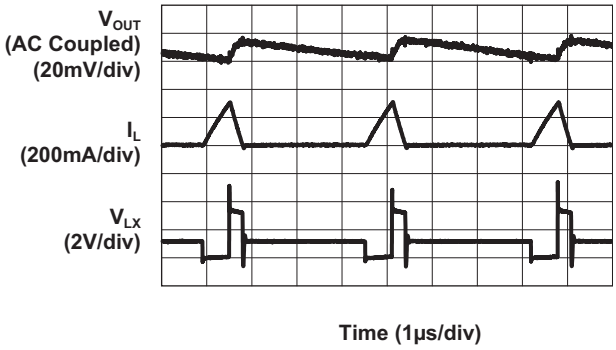

Functional Block Diagram

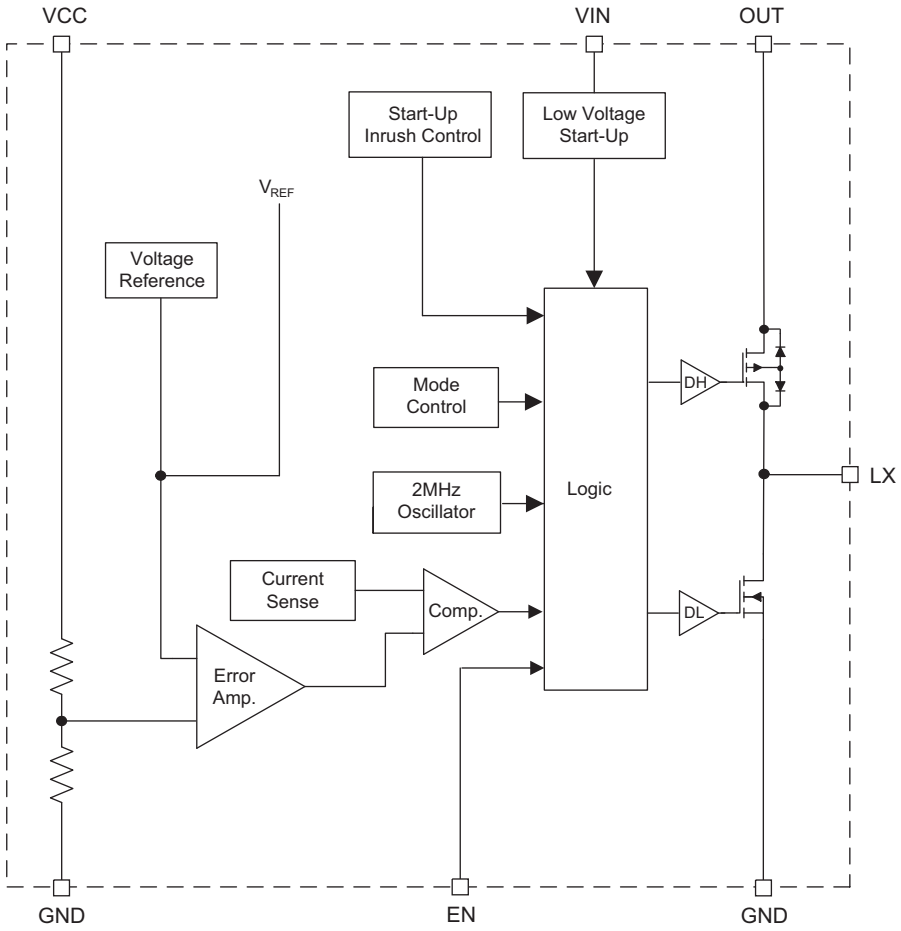

Functional Description

The AAT1265 synchronous step-up converter is targeted for single- or dual-cell alkaline, NiMH, and NiCd and single-cell lithium-ion/polymer battery applications. It has a 1V typical start-up voltage with operation after start-up to less than 0.8V.

The high 2MHz switching frequency of the AAT1265 facilitates output filter component size reduction for improved power density and reduced overall footprint. It also provides greater bandwidth and improved transient response over other lower frequency step-up converters. The compensation and feedback is integrated with only three external components (C_{IN}, C_{OUT}, L).

Low $R_{DS(ON)}$ synchronous power switches provide high efficiency for heavy load conditions. Switching frequency modulation and low quiescent current maintains this high efficiency for light load and sleep mode conditions.

In addition to the improved efficiency, the synchronous boost has the added performance advantage of true load disconnect during shutdown (<1µA shutdown current), inrush current limit, and short-circuit protection.

PWM / Light Load Control

The AAT1265 is a fixed frequency PWM peak current mode control step-up converter. For light load conditions (10 to 20mA and below), the converter transitions to a variable

frequency (Light Load) mode to reduce the dominant switching losses. In addition to Light Load operation, a zero current comparator blocks reverse current in the P-channel synchronous MOSFET, forcing DCM operation at light load. These controls, along with very low quiescent current, help to maintain high efficiency over the complete load range without the compromise of increased output voltage ripple during light load conditions.

Start-up and Inrush Current Limit

The start-up sequence of the AAT1265 varies depending upon whether the input voltage is greater than or less than 2V. Above 1V, a start-up oscillator operating at 25% duty cycle controls the synchronous power stage and charges the output to 2V. For an input voltage greater than 2V, the output is charged at a constant current of 300mA until the output reaches a voltage level just below the input voltage. The step-up converter then takes control and continues to charge the output to the steady-state voltage. The step-up converter N-channel switch current is limited to 1A and the typical start-up time is 2.5ms.

Shutdown and Output Disconnect

A typical synchronous step-up (boost) converter has a conduction path from the input to the output via the body diode of the P-channel MOSFET. The AAT1265 design disconnects this body diode from the output and eliminates this conduction path. This enables the AAT1265 to provide true load disconnect during shutdown and inrush current limit at turn-on.

Short-Circuit Protection

The P-channel synchronous MOSFET body diode disconnect feature also gives the AAT1265 the ability to provide output short-circuit current limit protection.

Applications Information

Inductor Selection

The AAT1265 is designed to operate with a 2.2µH inductor for all input/output voltage combinations. The inductor saturation current rating should be greater than the NMOS current limit specification listed in the Electrical Characteristics table. If necessary, the peak inductor current can exceed the saturation level by a small amount with no significant effect on performance. Table 1 provides a list of some suggested inductor manufacturers and their part numbers.

Output and Input Capacitor Selection

Surface mount X5R or X7R ceramic capacitors are suggested for both the output and the input. For the output capacitor (C1 in Figure 4) a 4.7µF, 10V, X5R ceramic capacitor is necessary for stability, transient response, and ripple performance. The same 0805 sized capacitor is used for the input (C2 of Figure 4). If desired, a smaller, 0603 sized, 4.7µF, 6.3V, X5R ceramic capacitor can be substituted for the input capacitor (C2). Suggested ceramic capacitor suppliers are listed in Table 1.

PCB Layout Guidelines

Figures 1, 2, and 3 display the evaluation board layout and suggested component placement. Due to the high switching speed of the AAT1265, it is important that the evaluation board layout be followed. Even the best switch-mode power supply design cannot overcome the problems that can be caused by a poor layout.

For the AAT1265, it is necessary that C1 and C2 be placed as close as possible to the IC with a good low impedance path to the GND pins of the IC. It is also good practice to minimize the length of the trace from the OUT pin to the output inductor. This prevents switching noise from radiating into other high noise sensitive, high impedance circuits.

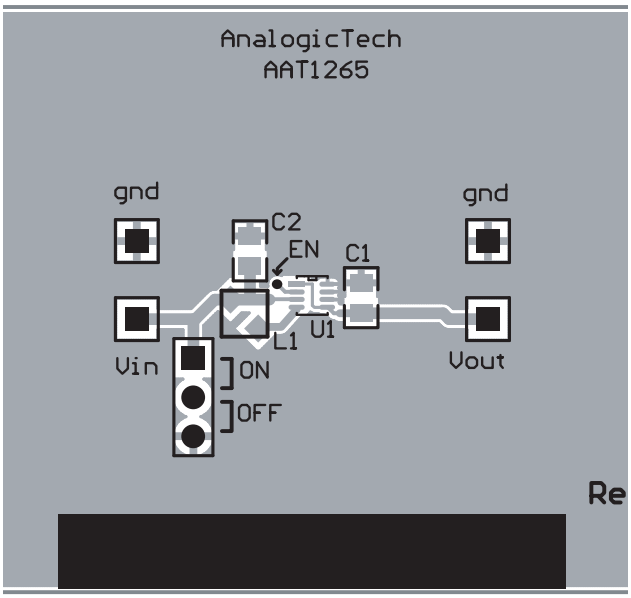

Figure 1: AAT1265 Evaluation Board Top Side.

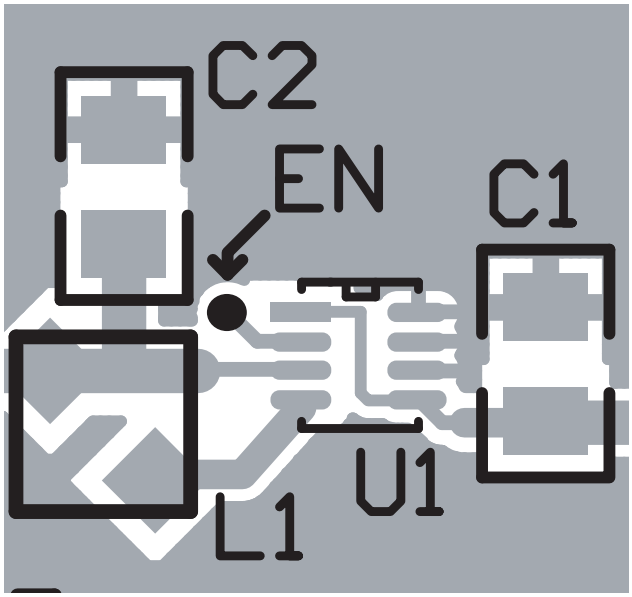

Figure 2: Component Placement.

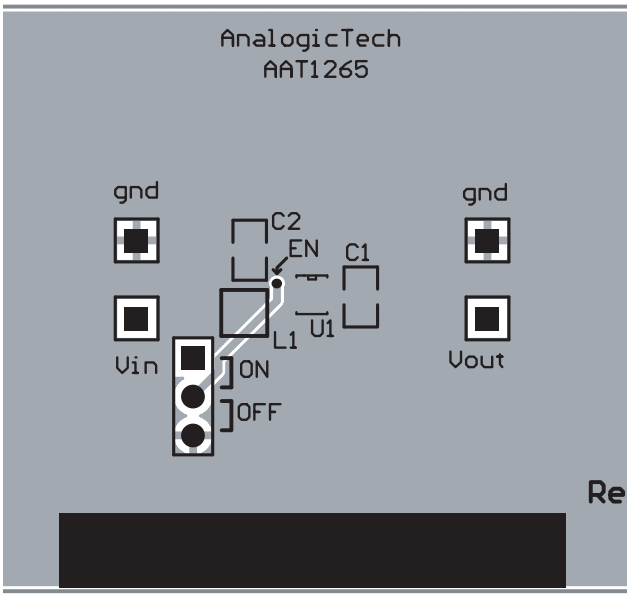

Figure 3: AAT1265 Evaluation Board Bottom Side.

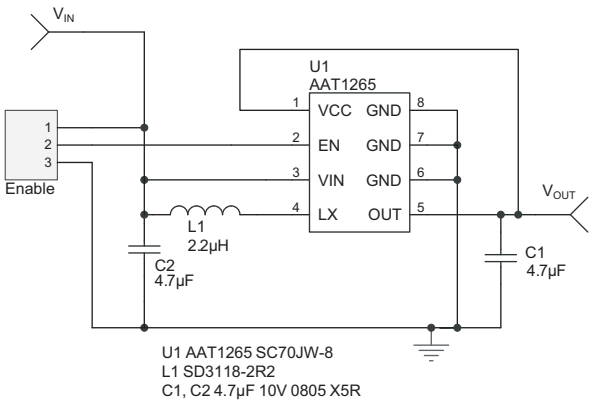

Figure 4: AAT1265 Evaluation Board Schematic.

Manufacturer	Value	Part		Voltage	Case Size	Part Number
Murata www.murata.com	4.7µF	Output or Input Capacitor		10V	0805	GRM21BR61A475KA73L
		Input Capacitor		6.3V	0603	GRM188R60J475KE19D
TDK www.tdk.com	4.7µF	Output or Input Capacitor		10V	0805	C2012X5R1A475K
		Input Capacitor		6.3V	0603	C1608X5ROJ475K
Taiyo Yuden www.t-yuden.com	4.7µF	Output or Input Capacitor		10V	0805	LMK212BJ475MG
		Input Capacitor		6.3V	0603	JMK107BJ475MA
Manufacturer	**Value**	**Part**	**I_{SAT}**	**DCR**	**Case Size**	**Part Number**
Sumida www.sumida.com	2.2µH	Inductor	1.50A	75mΩ	3.2 x 3.2 x 1.55	CDRH2D14-2R2
Cooper Electronics www.cooperet.com	2.2µH	Inductor	1.62A	69mΩ	3.1 x 3.1 x 1.85	SD3118-2R2

Table 1: Suggested Component Selection.

Ordering Information

Voltage	Package	Marking[1]	Part Number (Tape and Reel)[2]
3.0V	SC70JW-8	TCXYY	**AAT1265IJS-3.0-T1**
3.3V	SC70JW-8	RLXYY	**AAT1265IJS-3.3-T1**
3.6V	SC70JW-8	TBXYY	**AAT1265IJS-3.6-T1**
5.0V	SC70JW-8	UQXYY	**AAT1265IJS-5.0-T1**

Pb-free

All AnalogicTech products are offered in Pb-free packaging. The term "Pb-free" means semiconductor products that are in compliance with current RoHS standards, including the requirement that lead not exceed 0.1% by weight in homogeneous materials. For more information, please visit our website at http://www.analogictech.com/pbfree.

Package Information

SC70JW-8

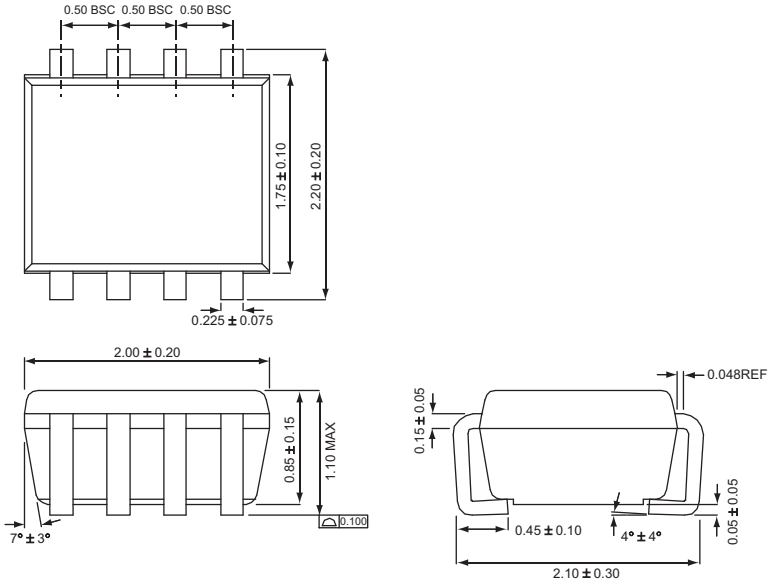

All dimensions in millimeters.

1. XYY = assembly and date code.
2. Sample stock is generally held on part numbers listed in **BOLD**.

Advanced Analogic Technologies, Inc.
3230 Scott Boulevard, Santa Clara, CA 95054
Phone (408) 737-4600
Fax (408) 737-4611

© Advanced Analogic Technologies, Inc.
AnalogicTech cannot assume responsibility for use of any circuitry other than circuitry entirely embodied in an AnalogicTech product. No circuit patent licenses, copyrights, mask work rights, or other intellectual property rights are implied. AnalogicTech reserves the right to make changes to their products or specifications or to discontinue any product or service without notice. Except as provided in AnalogicTech's terms and conditions of sale, AnalogicTech assumes no liability whatsoever, and AnalogicTech disclaims any express or implied warranty relating to the sale and/or use of AnalogicTech products including liability or warranties relating to fitness for a particular purpose, merchantability, or infringement of any patent, copyright or other intellectual property right. In order to minimize risks associated with the customer's applications, adequate design and operating safeguards must be provided by the customer to minimize inherent or procedural hazards. Testing and other quality control techniques are utilized to the extent AnalogicTech deems necessary to support this warranty. Specific testing of all parameters of each device is not necessarily performed. AnalogicTech and the AnalogicTech logo are trademarks of Advanced Analogic Technologies Incorporated. All other brand and product names appearing in this document are registered trademarks or trademarks of their respective holders.