Agamem Microelectronics Inc. **AA88347AP**

8-BIT DAC

■ FEATURE

- 12 bits serial data input(3 wire serial data transfer method, DI, CLK, LD)
- R-2R resistor ladder used for D/A conversion
- 8 channels with 8-bit resolution monotonic D/A converted
- 8 channel buffer operational amplifiers operating in the full voltage range from VCC to GND only if VDD=VCC and VSS=GND
- Max. 2.5 MHz serial digital data input
- Serial I/O for cascade application
- Max. 1.0 mA output drive/sink current
- Two separate power supply/ground lines for system and analog power supply
- Single +5 V system power supply

Pin Assignment (Top View)

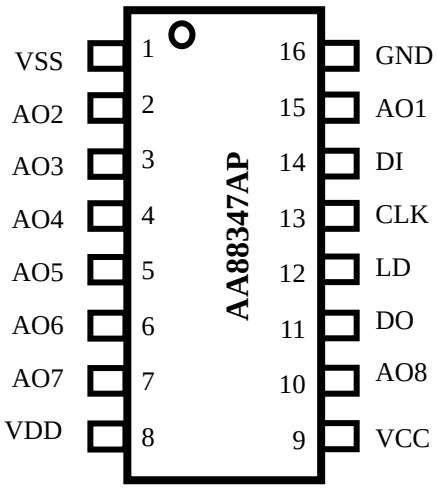

■ DESCRIPTION

The AA88347AP is a CMOS processed digital to analog converter (DAC) with 8-bit reso- lotion, low leakage current and low operating current. The AA88347AP has 8 channels with build in operational amplifier output buffers which could operate in the full-swing voltage range from VCC to GND and enhance the Drive/Sink ability up to max. 1mA.

Digital data (DI) input serially in a max. 2.5 MHz clock (CLK) rate. The latched 12-bit digital data is converted into an analog DC voltage in the range from VSS to VDD with 8-bit resolution in one of the eight channels by the D/A converter in a max. 100 μs settling time.

AA88347AP is a single 5V power DAC. Analog DC output could be full voltage swing as the analog power is equal to the system power .

In addition to normal D/A converter applications, AA88347AP is also available for electronic volume and instead of potentio- meters for adjustment due to its high stability on the capacitive load. .

16 pins TSSOP package type are available for AA88347AP. Its operational temper- nature range is specified over –20℃ to 85℃.

■ PIN DESCRIPTION

Symbol	Pin No.	Type	Name & Function
VCC	9	—	+5V system power supply pin .
GND	16	—	System ground pin
VDD	8	—	Analog power supply pin .
VSS	1	—	Analog ground pin
CLK	13	I	Serial clock input pin. At its rising edge, DI data shift into the Shift-Register.
LD	12	I	Data Strobe pin. When it's on high, upper 4-bit and lower 8-bit of the 12-bit in the Shift-Register be latched into the Address Decoder and the Data-Latch, respectively
Data Input/Output			
D1	14	I	Serial Digital Data input pin
DO	11	O	Serial Digital Data output pin. Output from the 12th data in the Shift-Register
DAC Output			
AO1	15	O	
AO2	2	O	
AO3	3	O	
AO4	4	O	8-bit D/A converter outputs
AO5	5	O	Output range is from VSS to VDD
AO6	6	O	
AO7	7	O	
AO8	10	O	

■ BLOCK DIAGRAM

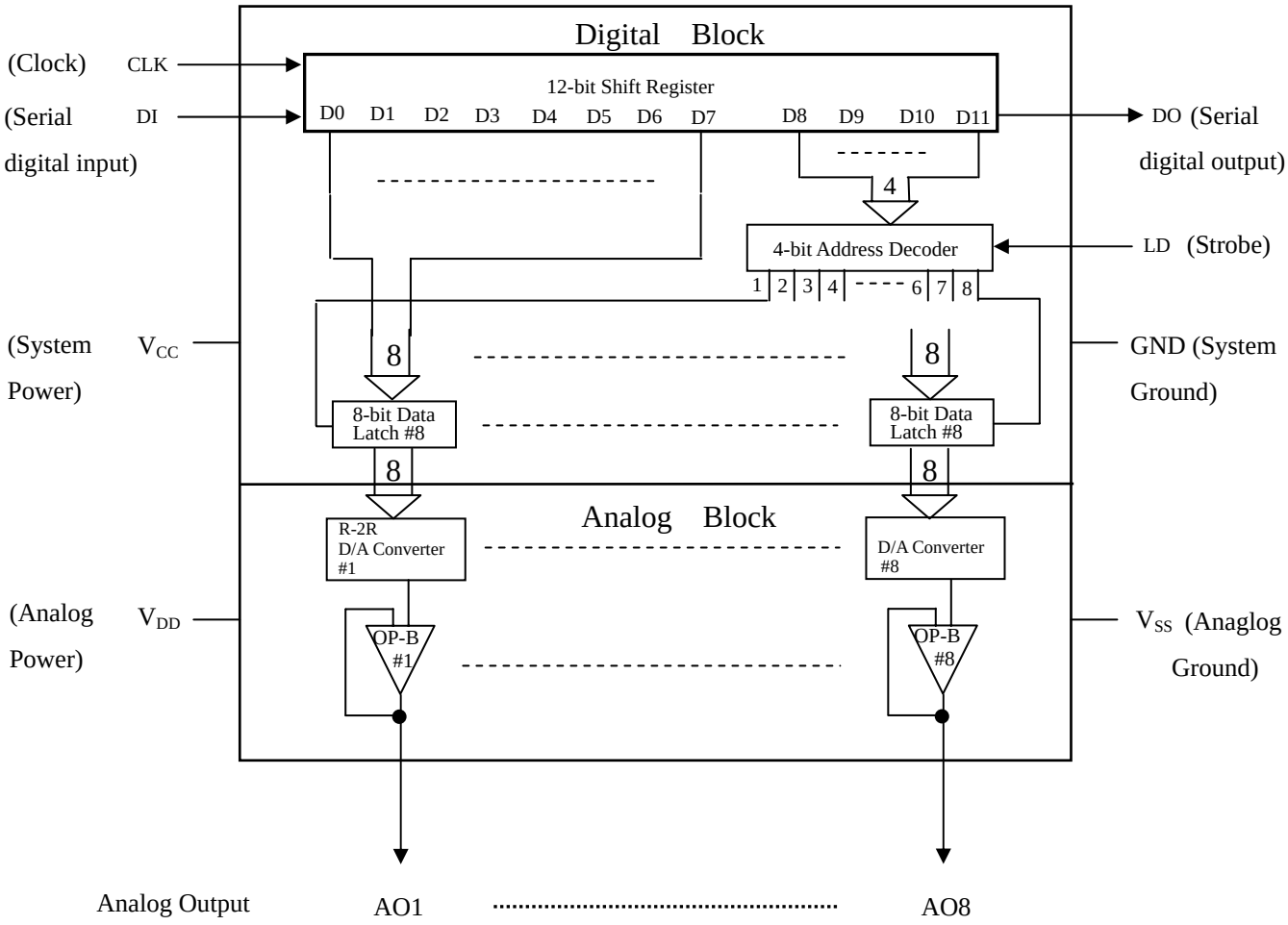

* Vcc and GND are for digital block and operational amplifier buffer block
* VDD, VSS are only for Analog block except operational amplifier buffer block
* Vss + 2V ≦ V_{DD} ≦ Vcc
* GND ≦ V_{SS} ≦ V_{DD} – 2V

■ Cascade Connection

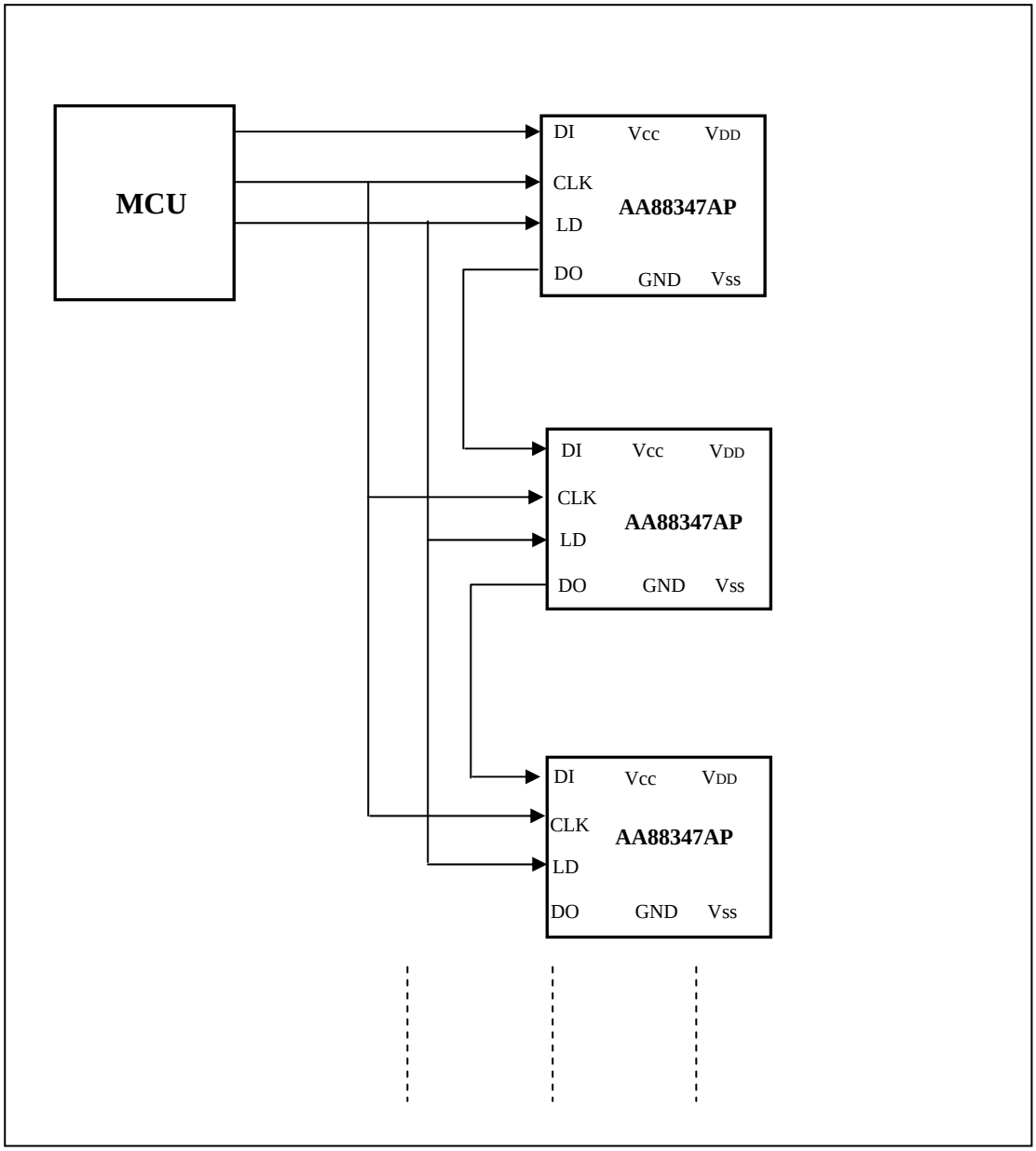

* VDD and VSS of each AA88347AP could be different depend on the application consideration

■ Data Input Format

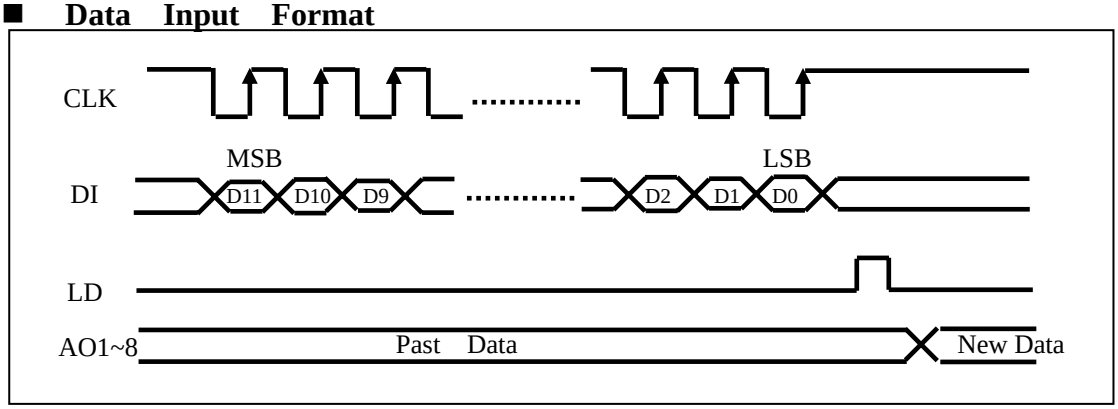

■ Data Format in Shift Register

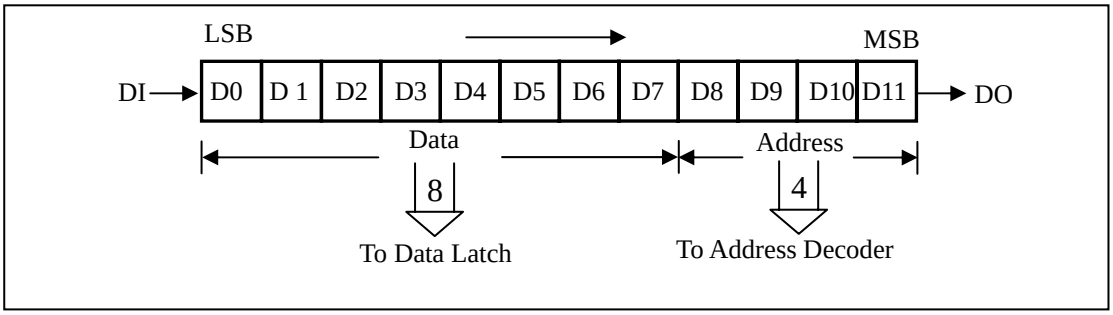

■ Data Conversion

Data								DAC Output Level
D7	D6	D5	D4	D3	D2	D1	D0	AOx
0	0	0	0	0	0	0	0	V_{SS}
0	0	0	0	0	0	0	1	V_{SS} + LSB*
0	0	0	0	0	0	1	0	V_{SS} + 2 * LSB
⋮	⋮	⋮	⋮	⋮	⋮	⋮	⋮	⋮
1	1	1	1	1	1	1	0	V_{DD} - LSB
1	1	1	1	1	1	1	1	V_{DD}

* LSB = (V_{DD}-V_{SS})/255

■ Channel Map

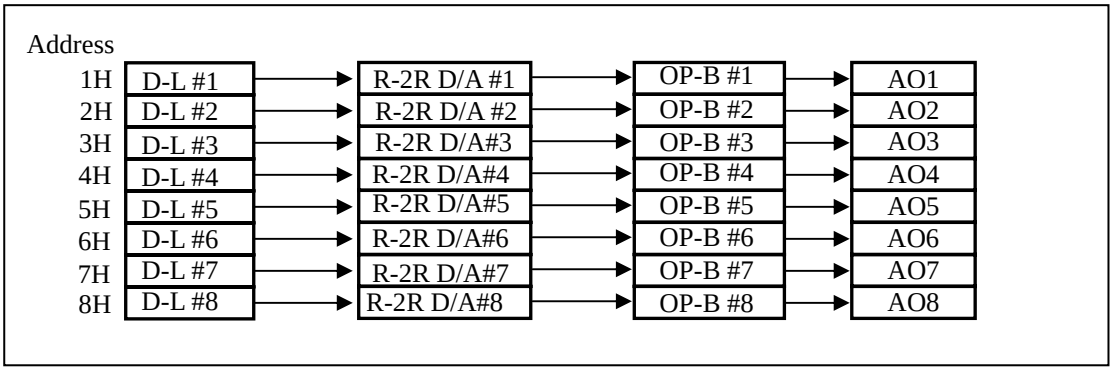

■ Address Decoding

Address				Data Latch Selected
D8	D9	D10	D11	
0	0	0	0	NA
0	0	0	1	Data Latch #1
0	0	1	0	Data Latch #2
0	0	1	1	Data Latch #3
0	1	0	0	Data Latch #4
0	1	0	1	Data Latch #5
0	1	1	0	Data Latch #6
0	1	1	1	Data Latch #7
1	0	0	0	Data Latch #8
1	0	0	1	NA
1	0	1	0	NA
1	0	1	1	NA
1	1	0	0	NA
1	1	0	1	NA
1	1	1	0	NA
1	1	1	1	NA

■ ELECTRICAL CHARACTERISTICS

ABSOLUTE MAXIMUM RATINGS (See NOTE)

Parameter	Symbol	Rating			Unit	Condition
		Min	Typ	Max		
System Voltage	V_{CC}	-0.3	—	+7.0	V	Ta = +25℃ GND = 0V $V_{DD} \leqq V_{CC}$,
Analog Voltage	V_{DD}	-0.3	—	+7.0	V	
Input Voltage	V_{IN}	-0.3	—	V_{CC} + 0.3	V	Ta = +25℃ GND = 0V
Output Voltage	V_{OUT}	-0.3	—	V_{CC} + 0.3	V	
Power Dissipation	P_D	—	—	250	mW	
Operating Ambient Temperature	Ta	-20	—	+85	℃	
Storage Temperature	T_S	-55	—	+150	℃	

NOTE: Stress above those listed under “Absolute Maximum Rating” may cause permanent damage to the device. This is a stress rating only and functional operation of the device at these or any other conditions above those indicated in the operational section of this specification is not implied. Exposure to absolute maximum rating conditions for the extended periods of time may affect device reliability.

RECOMMENDED OPERATING CONDITIONS

Parameter	Symbol	Rating			Unit	Condition
		Min	Typ	Max		
System Voltage	V_{CC}	4.5	5.0	5.5	V	$V_{CC} \geqq V_{DD}$, $V_{DD} - V_{SS} \geqq 2.0V$ $V_{SS} \geqq GND$
	GND	—	0	—	V	
Analog Voltage	V_{DD}	2.0	—	V_{CC}	V	
	V_{SS}	GND	—	$V_{CC} - 2.0$	V	
Analog Output Current	I_{AO}	-1.0	—	+1.0	mA	V_{AO} shift $\leqq$ 0.3V
Analog Output Load Capacitance for Oscillation limit	COL	—	—	+1.0	μF	
Operating Ambient Temperature	Ta	-20	—	+85	℃	

■ DC CHARACTERISTICS

◆ Digital Block

Ta = 25℃

Parameter	Symbol	Value			Unit	Condition
		Min	Typ	Max		
System Voltage	V_{CC}	4.5	5.0	5.5	V	
System Current	I_{CC}	—	1.2	2.5	mA	CLK = 1 MHz, No load;
Input Leakage Current	I_{ILK}	-5	—	+5	μA	V_{IN} = 0V / 5V
Digital Input Low Voltage	V_{IL}	—	—	0.2 • V_{CC}	V	
Digital Input High Voltage	V_{IH}	0.5 • V_{CC}	—	—	V	
Digital Output Low	V_{OL}	—	—	0.4	V	I_{OL} = +2.5 mA
Digital Output High	V_{OH}	V_{CC} – 0.4	—	—	V	I_{OH} = –400 μA

◆ Analog Block

Ta = 25℃

Parameter	Symbol	Value			Unit	Condition
		Min	Typ	Max		
Analog Current	I_{DD}	—	0.7	1.0	mA	No load
Analog Voltage	V_{DD}	2.0	—	V_{CC}	V	V_{DD} –V_{SS} ≧ 2V
	V_{SS}	GND	—	V_{CC} – 2.0	V	
Analog Output Drive Range (V_{CC}=V_{DD}=5V, V_{SS}=GND=0V, Data=#FF)	V_{AOH}	V_{DD} – 0.1	V_{DD}	V_{DD} + 0.1	V	I_{AOH} = 0 μA
	V_{AOH}	V_{DD} – 0.2	V_{DD}	V_{DD} + 0.2	V	I_{AOH} = –500 μA
	V_{AOH}	V_{DD} – 0.3	V_{DD}	V_{DD} + 0.3	V	I_{AOH} = –1mA
Analog Output Sink Range (V_{CC}=V_{DD}=5V, V_{SS}=GND=0V, Data=#00)	V_{AOL}	V_{SS} – 0.1	V_{SS}	V_{SS} + 0.1	V	I_{AOL} = 0 μA
	V_{AOL}	V_{SS} – 0.2	V_{SS}	V_{SS} + 0.2	V	I_{AOL} = 500 μA
	V_{AOL}	V_{SS} – 0.3	V_{SS}	V_{SS} + 0.3	V	I_{AOL} = 1mA
Resolution (AOx)	Res	—	8	—	bit	V_{CC} =5.5V, GND=0V V_{DD}=4.775V, V_{SS}=0.95 LSB = 15mv, no load
Integral Non-Linearity	INL	-3.5	—	+3.5	LSB	
Differential Non-Linearity	DNL	-1.5	0	+2.5	LSB	

NOTES:

Integral Non-Linearity : The difference between the digital data converted DC analog values and a reference straight line drawn through the first and the last output values

Differential Non-Linearity : The difference between the ideal and real increment value of DC analog voltage when the digital data increase 1 bit.

■ AC CHARACTERISTICS

Ta = 25℃

Parameter	Symbol	Value			Unit	Condition
		Min	Typ	Max	ns	
Clock Rate	T_{CR}	400	1000	—	ns	
Load Strobe Pulse Width	T_{LDP}	—	200	—	ns	
Analog Output Settling Time	T_{AOS}	—	—	100	μs	*RAL = 10 kΩ, CAL = 50pF (#00--> #FF)
Digital Output Delay Time	T_{DDO}	—	—	350	ns	**CL = 100 pF (Max.)

◆ AC Test Condition

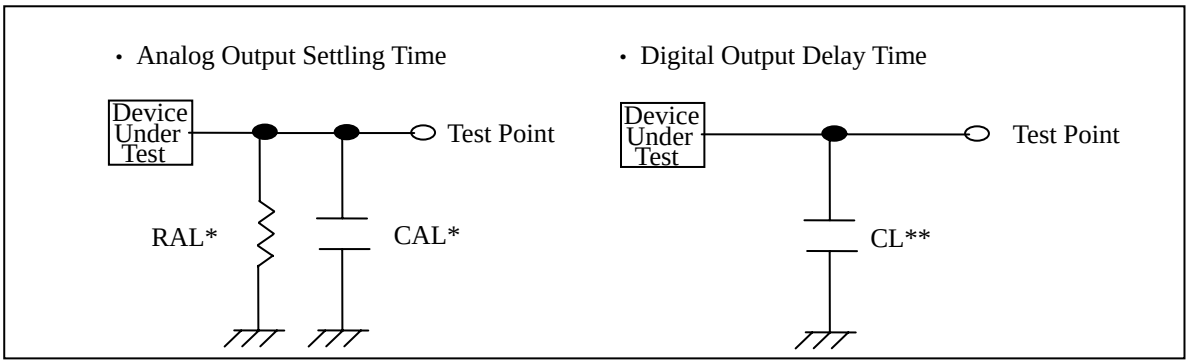

◆ Timing Chart

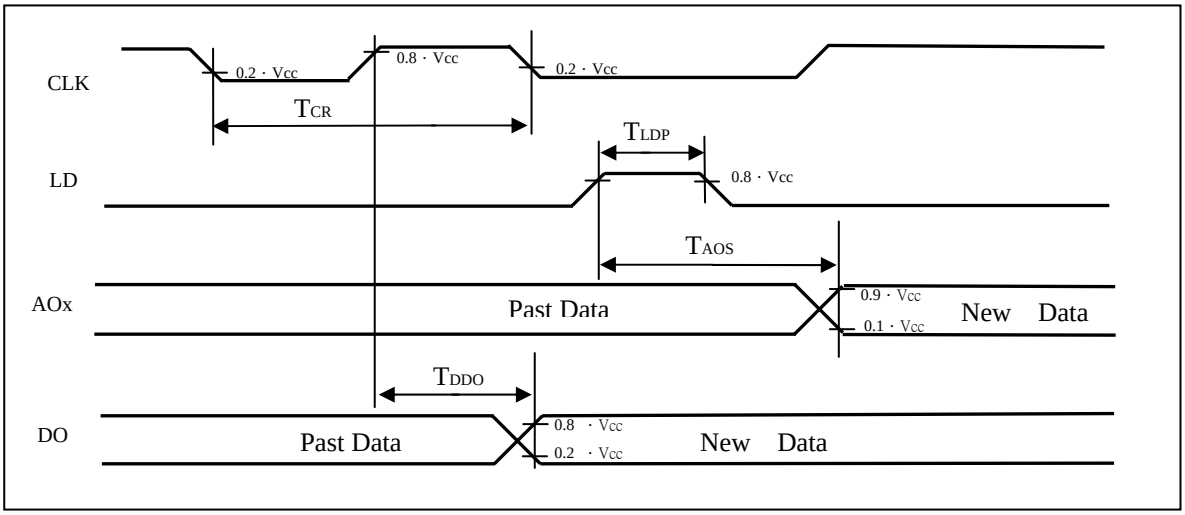

■ TSSOP PACKAGE DIMENSION

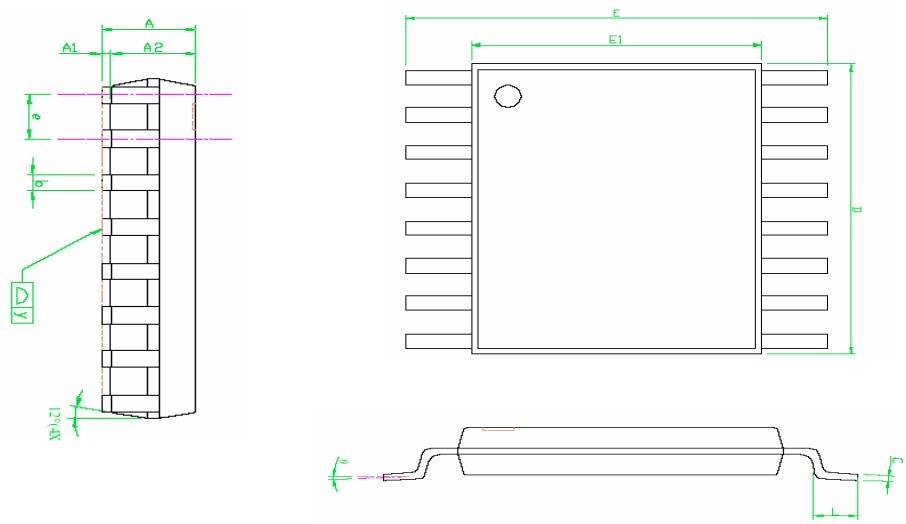

SYMBOLS	DIMENSIONS IN MILLIMETERS			DIMENSIONS IN INCHES		
	MIN	NOM	MAX	MIN	NOM	MAX
A	- - -	- - -	1.20	- - -	- - -	0.048
A1	0.05	- - -	0.15	0.002	- - -	0.006
A2	0.80	1.00	1.05	0.031	0.039	0.041
b	0.19	- - -	0.30	0.007	- - -	0.012
C	0.09	- - -	0.20	0.004	- - -	0.008
D	4.90	5.00	5.10	0.193	0.197	0.201
E	6.20	6.40	6.60	0.244	0.252	0.260
E1	4.30	4.40	4.50	0.169	0.173	0.177
e	- - -	0.65	- - -	- - -	0.026	- - -
L	0.45	0.60	0.75	0.018	0.024	0.030
y	- - -	- - -	0.10	- - -	- - -	0.004
θ	0°	- - -	8°	0°	- - -	8°

NOTES:
1. Package body sizes exclude mold flash protrusions or gate burrs
2. Tolerance ± 0.1 ㎜ (4 mil) unless otherwise specified
3. Coplanarity:0.1 ㎜
4. Controlling dimension is millimeter converted inch dimensions are not necessarily exact
5. Followed from jedec mo-153