AA60S Series

60W Single AC/DC Power Module



FEATURES

- Encapsulated compact AC-DC power supply
- Over Load and Over Voltage Protection
- 3 Mounting Package Versoin:
  - Solder pins for direct PCB mount
  - Screw terminal block for chassis mount
  - DIN-Rail Mount
- Universal Input voltage range 85-264 VAC, 47-440 Hz
- 3kVAC Isolatoin, Protection Class ll level
- UL/IEC/EN 60950-1 Certified , CE Marked
- UL508 Approval
- Lead free, RoHs Compliant
- 3 Year Product Warranty

Security Lab Medical Metro Data Center Telecom Industrial Network

The AA60S series , isolated fully encapsulated 60W AC/DC power module with 3,000VAC isolation. With Universal input voltage 85-264VAC and International safety approvals, these power modules are ideal for applications in commercial and industrial electronic equipment. These isolated AC/DC converters are the latest offering from a world leader in power systems technology and manufacturing — Delta Electronics, Inc. With creative design technology and optimization of component placement, these converters possess outstanding electrical and thermal performance, as well as extremely high reliability under highly stressful operating conditions. industrial electronic equipment.

Model List

Model Number	Output Voltage	Output Current	Input Current 115VAC, 60Hz		Max. capacitive Load	Efficiency (typ.)
		Max.	@Max. Load	@No Load		@Max. Load
	VDC	mA	mA(typ.)	mA(typ.)	μF	%
AA60S0500A	5.1	10,000	936	50	8000	79
AA60S1200A	12	5000	1060	50	3900	82
AA60S1500A	15	4000	1047	50	3300	83
AA60S2400A	24	2500	1035	50	1500	84
AA60S3600A	36	1666	1035	50	1000	84
AA60S4800A	48	1250	1035	50	680	84

Input Characteristics

Parameter	Model	Min.	Typ.	Max.	Unit
Input Voltage Range	All Models	85	---	264	VAC
Input Frequency Range		47	---	63	Hz
Input Voltage Range		120	---	370	VDC
Inrush Current (Cold Start at 25℃)	115VAC	---	---	30	A
	230VAC	---	---	50	A

E-mail: DCDC@delta.com.tw
http://www.deltaww.com/dcdc

Output Characteristics

Parameter	Conditions	Min.	Typ.	Max.	Unit
Output Voltage Accuracy		---	±1.0	±2.0	%
Line Regulation	Vin=Min. to Max.	---	±0.2	±1.0	%
Load Regulation	Iout=Min. to Max.	---	±0.5	±1.0	%
Ripple & Noise (20MHz)	5.1VDC Output Models	---	2.0	3.0	$\%V_{PP}$ of
	Other Output Models	---	1.0	1.3	$\%V_{PP}$ of
Minimum Load		---	10	---	%Inom.
Over Voltage Protection	Zener diode clamp	---	120	---	% of Vo
Transient Response Deviation	(Iout=100% to Iout=50%)		±3	±6	%
Temperature Coefficient		---	±0.02	---	%/℃
Overshoot		---	---	5	% Vout
Current Limitation	Foldback, auto-recovery (long term overload condition may cause damage)	105	---	---	%Inom.
Short Circuit Protection	Hiccup mode, indefinite (automatic recovery)				

General Characteristics

Parameter	Conditions	Min.	Typ.	Max.	Unit
I/O Isolation Voltage	Input to Output, 60 Seconds	3000	---	---	VACrms
I/O Isolation Resistance	500 VDC	100	---	---	MΩ
Switching Frequency		---	100	---	KHz
Hold-up Time		---	20	---	ms
MTBF (calculated)	MIL-HDBK-217F@25℃, Ground Benign	125,000	---	---	Hours
EMC Emission	Conducted and radiated	EN 55011 class B, EN 55022 class B, FCC part 15 class B			
EMC Immunity according EN61000-6-1	Standard	Specification Requirement			Performance Criteria
	EN61000-4-2	Air ±8KV Cont. ±4KV			B
	EN61000-4-3	80~1000MHz, 10V/m 80% AM, 1KHz modulation			A
	EN61000-4-4	AC port ±2KV DC, SL, TL ±2KV not less than 1 min.			B
	EN61000-4-5	1.2/50μS(8/20μS) AC dif. ±1KV DC ±0.5KV			B
	EN61000-4-6	0.15~80MHz, 10Vrms (functional earth ports included)			B
		80% AM, 1KHz modulation			
	EN61000-4-8	50Hz/60Hz, 30A/m			A
	EN61000-4-11	30%, 10ms			B
		60%, 100ms, 95%, 5000ms			C
Protection Class II		According IEC/EN 60536			
Safety Approvals		cUL/UL 60950-1,IEC/EN 60950-1			
		UL508 approval			

Input Fuse

All Models	
Built-in Fuse	6A / 250VAC
External Fuse (Recommended)	3A Slow – Blow Type

Environmental Specifications

Parameter	Conditions		
Temperature Range (operational)	Ambient	-10℃	+70℃
Power Derating (5.1Vout)	+40℃ to +70℃		2.25W / ℃
Storage Temperature Range		-40℃	+85℃
Over Temperature Protection	at 90℃ (automatic recovery at 67℃)		
Cooling	Free-Air convection		
Humidity (non condensing)		---	95 % rel. H

Power Derating Curve

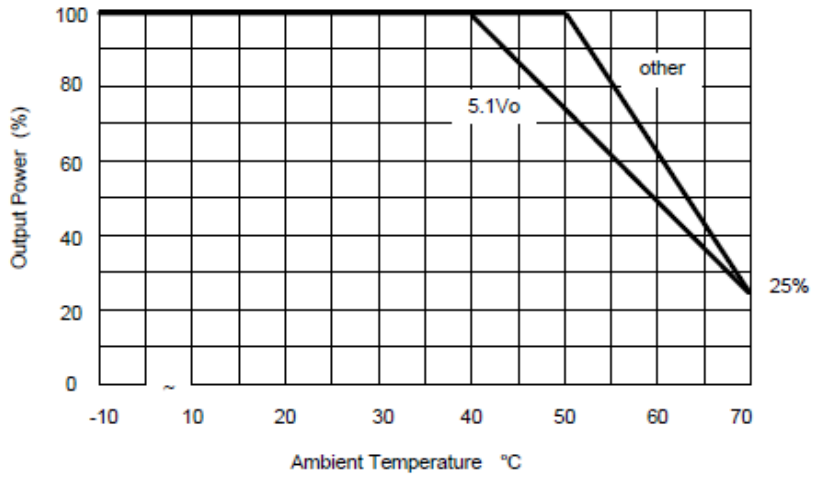

Notes

1 All specifications typical at Ta=+25℃, resistive load, 115VAC, 60Hz input voltage and after warm-up time rated output current unless otherwise noted.

2 Ripple & Noise measurement bandwidth is 0~20 MHz

3 These power modules require a minimum output loading to maintain specified regulation, operation under no-load conditions will not damage the power supplies however they may not meet all listed specifications.

4. Other input and output voltage may be available, please contact us for custom solution.

5 Long term short circuit operation may cause damage to the unit.

6 Specifications are subject to change without notice

Mechanical Drawing PCB Mounting

Mechanical Dimensions

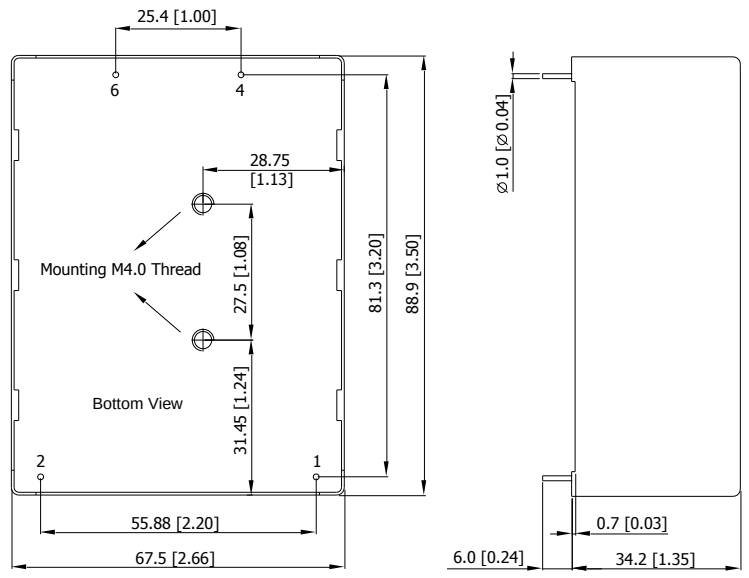

Pin Connections

Pin	Function
1	AC(N) – AC Neutral
2	AC(L) – AC Line
4	+Vout
6	-Vout

- All dimensions in mm (inches)
- Tolerance: ±0.5 (±0.02)
- Pin diameter ⇔ 1.0 ±0.1 (0.04±0.004)

Physical Outline

Case Size	:	88.9x67.5x34.2mm (3.50x2.66x1.35 inches)
Case Material	:	Plastic resin + Fiberglass (flammability to UL 94V-0 rated)
Pin Material	:	Copper Alloy with Gold Plate Over Nickel Subplate
Weight	:	345g

Mechanical Drawing Chassis Mounting

Mechanical Dimensions

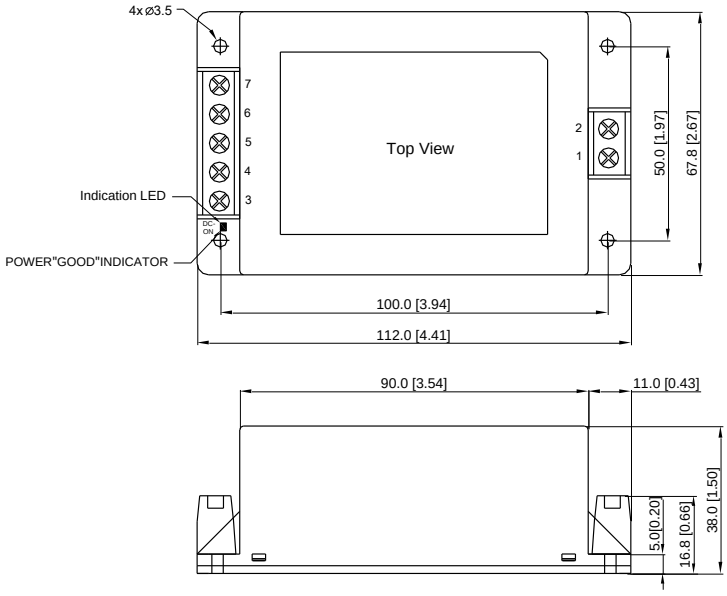

Connections

Terminal	Function
1	AC(N) – AC Neutral
2	AC(L) – AC Line
3	NC
4	+Vout
5	NC
6	-Vout
7	NC

NC: No Connection

- All dimensions in mm (inches)
- Tolerance: ±0.5 (±0.02)

Physical Outline

Case Size	:	112.0x67.8x38.0mm (4.41x2.67x1.50 inches)
Case Material	:	Plastic resin + Fiberglass (flammability to UL 94V-0 rated)
Weight	:	357g

Mechancial Drawing Chassis Mounting with DIN Rail Kit

Mechanical Dimensions

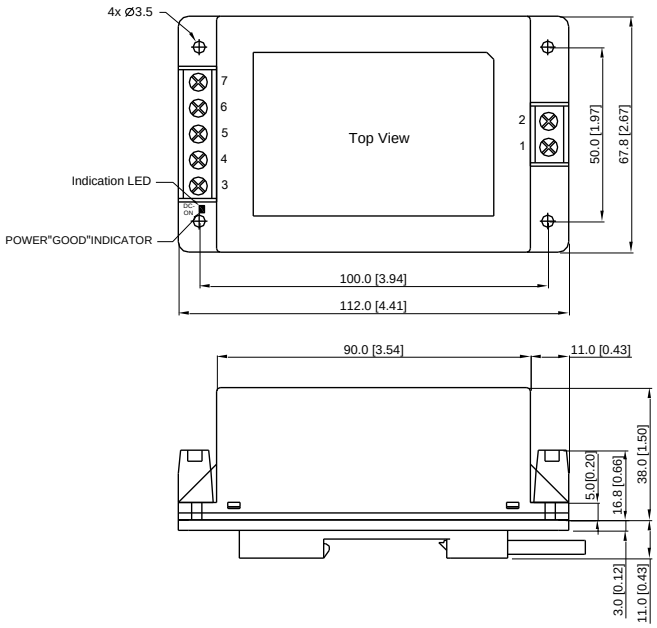

Physical Outline

Case Size	:	112.0x67.8x38.0mm (4.41x2.67x1.50 inches)
Case Material	:	Plastic resin + Fiberglass (flammability to UL 94V-0 rated)
Weight	:	410g

DIN-Rail Mounting Kit

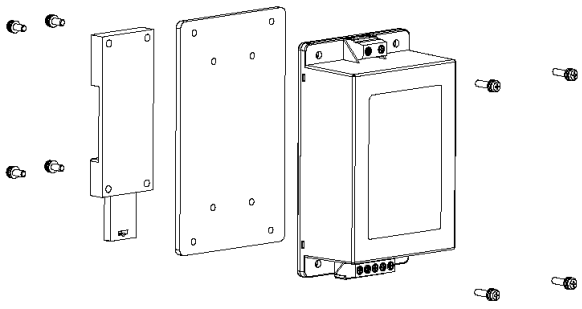

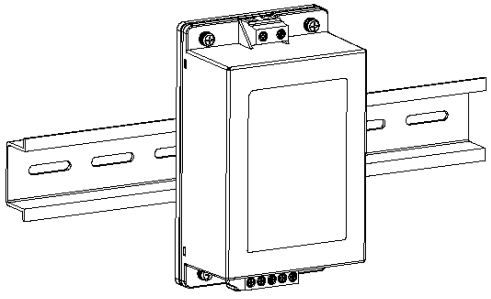

Part Numbering System

A	A	60	S	15	00	A
Form factor	Family series	Watt	Number of Outputs	Input Voltage	Output Voltage	Option Code
AC/DC Power Module	A~Z	60 : 60W	S - Single	05 : 5.1V	0 : 0V	A - Std PCB Mounting
			D - Dual	12 : 12V		C - Chasis Mounting
				15 : 15V		D - Chassis Mounting with DIN-Rail kit
				24 : 24V		
				36 : 36V		
				48 : 48V		

CONTACT: www.deltaww.com/dcdc

USA:
Telephone:
East Coast: 978-656-3993
West Coast: 510-668-5100
Fax: (978) 656 3964
Email: DCDC@delta-corp.com

Europe:
Phone: +31-20-655-0967
Fax: +31-20-655-0999
Email: DCDC@delta-es.com

Asia & the rest of world:
Telephone: +886 3 4526107
ext 6220~6224
Fax: +886 3 4513485
Email: DCDC@delta.com.tw

WARRANTY

Delta offers a three(3) years limited warranty. Complete warranty information is listed on our web site or is available upon request from Delta.

Information furnished by Delta is believed to be accurate and reliable. However, no responsibility is assumed by Delta for its use, nor for any infringements of patents or other rights of third parties, which may result from its use. No license is granted by implication or otherwise under any patent or patent rights of Delta. Delta reserves the right to revise these specifications at any time, without notice

Mouser Electronics

Authorized Distributor

Click to View Pricing, Inventory, Delivery & Lifecycle Information:

Delta:

AA60S1200C AA60S3600C AA60S1500D AA60S4800D AA60S3600A AA60S4800A AA60S4800C AA60S1200A AA60S2400C AA60S1500C AA60S2400D AA60S2400A AA60S0500D AA60S3600D AA60S1200D AA60S0500C AA60S1500A AA60S0500A