A80 / SMA80

Cascadable Amplifier
20 to 500 MHz

Rev. V2

Features

- HIGH REVERSE ISOLATION 39 dB (TYP.)
- VERY LOW NOISE 2.3 dB (TYP.)
- HIGH GAIN 29 dB (TYP.)
- MEDIUM LEVEL OUTPUT +14.3 dBm (TYP.)

Description

The A80 RF amplifier is a discrete hybrid design, which uses thin film manufacturing processes for accurate performance and high reliability.
The 2 stage silicon bipolar feedback amplifier design displays impressive performance over a broadband frequency range.
An isolation transformer is used in the feedback loop, with the benefit of high reverse isolation.
Both TO-8 and Surface Mount packages are hermetically sealed, and MIL-STD-883 environmental screening is available.

Product Image

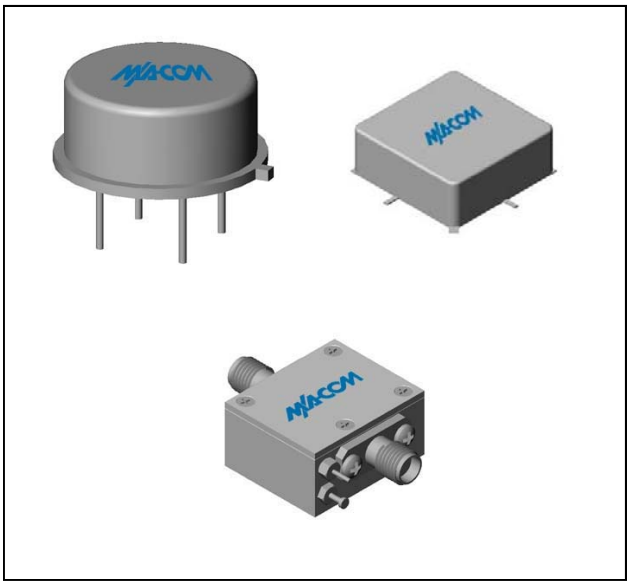

Ordering Information

Part Number	Package
A80	TO-8
SMA80	Surface Mount
MAAM-008731-00CA80	SMA Connectorized **

** The connectorized version is not RoHs compliant.

Electrical Specifications: $Z_0 = 50\Omega$, $V_{CC} = +15\ V_{DC}$

Parameter	Units	Typical	Guaranteed	
		25ºC	0º to 50ºC	-54º to +85ºC*
Frequency	MHz	10-550	20-500	20-500
Small Signal Gain (min)	dB	29.0	27.5	26.5
Gain Flatness (max)	dB	±0.3	±0.7	±1.0
Reverse Isolation	dB	39		
Noise Figure (max)	dB	2.3	3.0	3.4
Power Output @ 1 dB comp. (min)	dBm	14.3	13.0	12.5
IP3	dBm	+27		
IP2	dBm	+33		
Second Order Harmonic IP	dBm	+40		
VSWR Input / Output (max)		1.4:1 / 1.8:1	1.8:1 / 2.1:1	2.0:1 / 2.3:1
DC Current @ 15 Volts (max)	mA	45	49	52

* Over temperature performance limits for part number CA80, guaranteed from 0°C to +50°C only.

Absolute Maximum Ratings

Parameter	Absolute Maximum
Storage Temperature	-62ºC to +125ºC
Case Temperature	125ºC
DC Voltage	+17 V
Continuous Input Power	+6 dBm
Short Term Input power (1 minute max.)	50 mW
Peak Power (3 µsec max.)	0.5 W
"S" Series Burn-In Temperature (case)	125ºC

Thermal Data: $V_{CC} = +15\ V_{DC}$

Parameter	Rating
Thermal Resistance θ_{jc}	45ºC/W
Transistor Power Dissipation P_d	0.27 W
Junction Temperature Rise Above Case T_{jc}	12.2ºC

ADVANCED: Data Sheets contain information regarding a product M/A-COM Technology Solutions is considering for development. Performance is based on target specifications, simulated results, and/or prototype measurements. Commitment to develop is not guaranteed.
PRELIMINARY: Data Sheets contain information regarding a product M/A-COM Technology Solutions has under development. Performance is based on engineering tests. Specifications are typical. Mechanical outline has been fixed. Engineering samples and/or test data may be available. Commitment to produce in volume is not guaranteed.

• **North America** Tel: 800.366.2266 • **Europe** Tel: +353.21.244.6400
• **India** Tel: +91.80.4155721 • **China** Tel: +86.21.2407.1588
Visit www.macomtech.com for additional data sheets and product information.

M/A-COM Technology Solutions Inc. and its affiliates reserve the right to make changes to the product(s) or information contained herein without notice.

Cascadable Amplifier
20 to 500 MHz

Rev. V2

Typical Performance Curves at +25°C

Gain

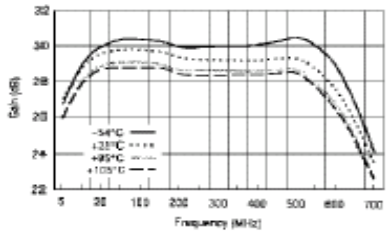

Noise Figure

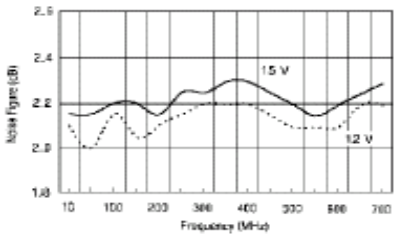

Power Output (1 dB Gain Compression)

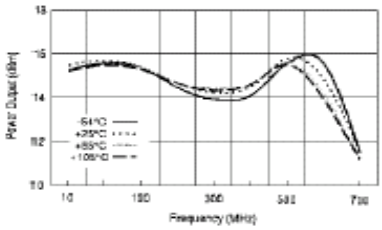

Intercept Point

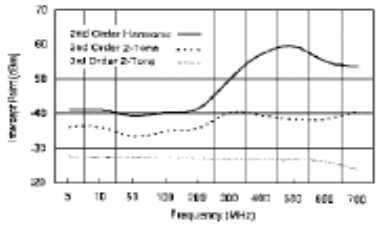

VSWR

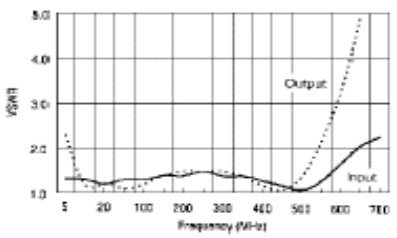

Outline Drawing: TO-8 *

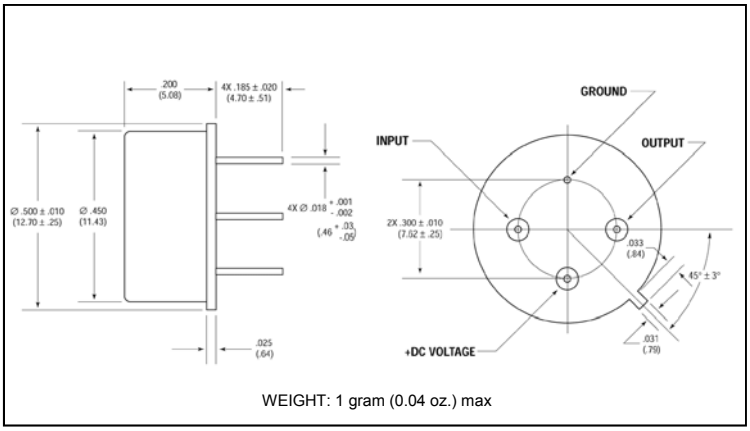

WEIGHT: 1 gram (0.04 oz.) max

Outline Drawing: Surface Mount *

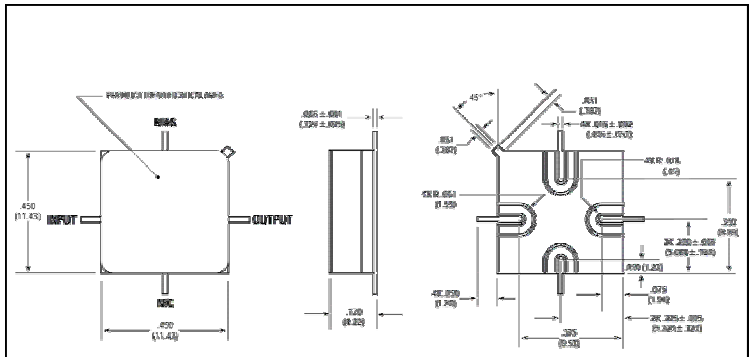

WEIGHT: 1 gram (0.04 oz.) max

Outline Drawing: SMA Connectorized *

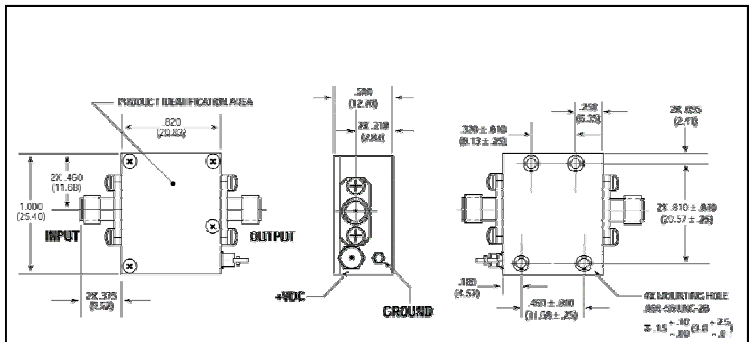

WEIGHT: 19 grams (0.67 oz.) max

* Dimensions are inches (millimeters) ±0.015 (0.38) unless otherwise specified.

ADVANCED: Data Sheets contain information regarding a product M/A-COM Technology Solutions is considering for development. Performance is based on target specifications, simulated results, and/or prototype measurements. Commitment to develop is not guaranteed.
PRELIMINARY: Data Sheets contain information regarding a product M/A-COM Technology Solutions has under development. Performance is based on engineering tests. Specifications are typical. Mechanical outline has been fixed. Engineering samples and/or test data may be available. Commitment to produce in volume is not guaranteed.

• **North America** Tel: 800.366.2266 • **Europe** Tel: +353.21.244.6400
• **India** Tel: +91.80.4155721 • **China** Tel: +86.21.2407.1588
Visit www.macomtech.com for additional data sheets and product information.

M/A-COM Technology Solutions Inc. and its affiliates reserve the right to make changes to the product(s) or information contained herein without notice.