## DESCRIPTION

The A4711 is a Single Wide-Bandwidth, fast single-pole double-throw (SPDT) CMOS switch featuring an On-Resistance of 2.7 ohm at $V_{CC}$=5.0V and wide power supply range from 1.8V to 5.5V. It can be used as an analog switch or as a low-delay bus switch.

The 350MHz high bandwidth performance supports the high frequency application.

Break-before-make function for both parts eliminates signal disruption during switching from preventing both switches being enabled simultaneously.

The A4711 is available in SC70-6 package.

## ORDERING INFORMATION

| Package Type | Part Number | |
|---|---|---|
| SC70-6 | C6 | A4711C6R |
| | | A4711C6VR |
| Note | R: Tape & Reel<br>V:Halogen free Package | |
| AiT provides all RoHS products<br>Suffix "V" means Halogen free Package | | |

## FEATURES

- Wide Power Supply Range: 1.8V to 5.5V
- High Bandwidth: 300MHz
- High Off-Isolation:
  84dB at 1MHz
  51dB at 10MHz
- On-Resistance: 2.7Ω(TYP) at 5.0V
- Fast Switching Time
  $T_{ON}$ = 25ns; $T_{OFF}$ = 17ns
- TTL/CMOS Compatible
- Break-Before-Make Switching
- Rail-to-Rail Signal Range
- Operation Temperature: -40℃ to 125℃
- Available in SC70-6 Package

## APPLICATION

- Wireless Handsets
- MP3 Players
- Portable Electronic Devices
- Relay Replacement
- PDAs
- Audio & Video Signal Routing
- PCMCIA Cards
- Computer Peripherals
- Modems

## TYPICAL APPLICATION

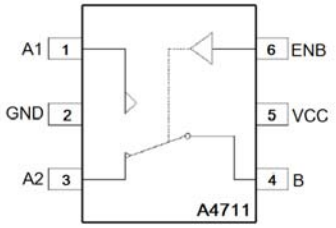

## PIN DESCRIPTION

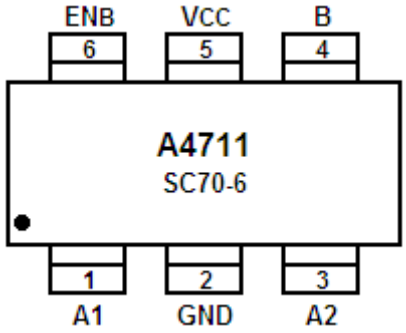


Top View

| Pin # | Pin Name | Function |
|---|---|---|
| 1 | A1 | Data Port |
| 2 | GND | Ground |
| 3 | A2 | Data Port |
| 4 | B | Data Port |
| 5 | $V_{CC}$ | Power Supply |
| 6 | ENB | Logic Control Signal |

## FUNCTION TABLE

| ENB | Function |
|---|---|
| 1 | A1 Connected to B |
| 0 | A2 Connected to B |

## ABSOLUTE MAXIMUM RATINGS

| | |
|---|---|
| $V_{CC}$, DC Supply Voltage | -0.3V ~ 6.0V |
| $V_{A1}$/ $V_{A2}$/ $V_B$, DC Switch Voltage | -0.3V ~ $V_{SUP}$ + 0.3 (V) |
| $V_{ENB}$, DC Input Voltage | -0.3V ~ $V_{SUP}$ + 0.3 (V) |
| $I_{(A1/A2/B)}$, Continuous Current | ±200mA |
| $I_{PEAK(A1/A2/B)}$, Peak Current[NOTE1] | ±300mA |
| $T_A$, Operating Temperature Range | -40℃~ +125℃ |

Stress beyond above listed “Absolute Maximum Ratings” may lead permanent damage to the device.
These are stress ratings only and operations of the device at these or any other conditions beyond those indicated in the operational sections of the specifications are not implied. Exposure to absolute maximum rating conditions for extended periods may affect device reliability.
NOTE1: Pulsed at 1ms, 50% duty circle

## RECOMMENDED OPERATING CONDITIONS

| | |
|---|---|
| DC Supply Voltage ($V_{CC}$) | 1.8V to 5.5V |
| Switch Input Voltage ($V_S$) | 0V to $V_{CC}$ |
| Control Input Voltage ($V_{ENB}$) | 0V to $V_{CC}$ |
| Operation Temperature ($T_A$) | -40℃ to +125℃ |

## ELECTRICAL CHARACTERISTICS[NOTE3]

DC ELECTRICAL CHARACTERISTICS @ +2.7V Supply

| Parameter | Symbol | Conditions | Min. | Typ.(1) | Max. | Unit |
|---|---|---|---|---|---|---|
| Analog Signal Range | $V_{A1}/V_{A2}/V_B$ | | 0 | - | $V_{CC}$ | V |
| A1 On-Resistance | $R_{ON(A1)}$ | $V_{CC}$ = 2.7V; $I_B$ =-10mA ; $V_{A1}$ =1.5V | - | 5.5 | - | Ω |
| A2 On-Resistance | $R_{ON(A2)}$ | $V_{CC}$ = 2.7V; $I_B$ =-10mA ; $V_{A2}$ =1.5V | - | 5.5 | - | Ω |
| A1 On-Resistance Flatness[NOTE2] | $R_{FLAT(A1)}$ | $V_{CC}$ = 2.7V; $I_B$ =-10mA ; $V_{A1}$ =1.5V | - | 2.3 | - | Ω |
| A2 On-Resistance Flatness[NOTE2] | $R_{FLAT(A2)}$ | $V_{CC}$ = 2.7V; $I_B$ =-10mA ; $V_{A2}$ =1.5V | - | 2.3 | - | Ω |
| On-Resistance Match Between Channels[NOTE3] | $\Delta R_{ON}$ | $V_{CC}$ = 2.7V; $I_B$ =-10mA ; $V_{A2}$ /$V_{A1}$=1.5 | - | 0.15 | 1 | Ω |
| $A_1$ or $A_2$ Off Leakage Current | $I_{OFF(A1)}$ or $I_{OFF(A2)}$ | $V_{CC}$ = 3.6V; $V_{A1}$ or $V_{A2}$ = 3V, 0.3V; $V_B$ = 0.3V, 3 V | - | 0.01 | 1 | μA |
| $A_1$ or $A_2$. B On Leakage Current | $I_{OFF(A1)}$ $I_{OFF(A2)}$ $I_{ON(B)}$ | $V_{CC}$= 3.6V; $V_{A1}$ or $V_{A2}$ = 3.3V, 0.3V; $V_B$ = 0.3V, 3.3 V or floating | - | 0.01 | 1 | μA |
| Input Voltage High | $V_{IH}$ | Minimum High Level Input Voltage | 1.2 | - | - | V |
| Input Voltage Low | $V_{IL}$ | Maximum Low Level Input Voltage | - | - | 0.5 | V |
| Input Leakage Current | $I_{ENB}$ | $V_{ENB}$ = 0 or $V_{CC}$ | - | 0.01 | 1 | μA |

DYNAMIC CHARACTERISTICS @ +2.7V Supply

| Parameter | Symbol | Conditions | | Min. | Typ.(3) | Max. | Unit |
|---|---|---|---|---|---|---|---|
| **AC ELECTRICAL CHARACTERISTICS** | | | | | | | |
| Turn-On Time | $T_{ON}$ | $V_{CC}$ = 2.7V; $V_{A1}$ or $V_{A2}$ = 1.5V, $R_L$ =300Ω; $C_L$ = 35pF, $V_{IH}$=1.5V,$V_{IL}$=0V | | - | 30 | - | ns |
| Turn-Off Time | $T_{OFF}$ | $V_{CC}$ = 2.7V; $V_{A1}$ or $V_{A2}$ = 1.5V, $R_L$ =300Ω; CL = 35pF, $V_{IH}$=1.5V,$V_{IL}$=0V | | - | 20 | - | ns |
| Break-Before-Make Time | $T_{BBM}$ | $V_{CC}$ = 2.7V; $V_{A1}$ or $V_{A2}$ = 1.5V, $R_L$ = 300Ω; $C_L$ = 35pF | | - | 15 | - | ns |
| NC OFF Capacitance | $C_{OFF(A1)}$ | f = 1MHz | | - | 5.5 | - | pF |
| NO OFF Capacitance | $C_{OFF(A2)}$ | f = 1MHz | | - | 5.5 | - | pF |
| NC ON Capacitance | $C_{ON(A1)}$ | f = 1MHz | | - | 15.5 | - | pF |
| NO ON Capacitance | $C_{ON(A2)}$ | f = 1MHz | | - | 15.5 | - | pF |
| **ADDITIONAL APPLICATION CHARACTERISTICS** | | | | | | | |
| 3dB Bandwidth | $f_{3dB}$ | Signal = 0dBm, $R_L$ = 50Ω, $C_L$ = 5pF | | - | 350 | - | MHz |
| Off Isolation[NOTE6] | $V_{ISO}$ | $R_L$ = 50Ω, $C_L$ = 5pF, Signal = 0dBm | f = 1MHz | - | -84 | - | dB |
| | | | f =10MHz | - | -51 | - | dB |
| Power Supply Range | $V_{CC}$ | | | 1.8 | - | 5.5 | V |

DC ELECTRICAL CHARACTERISTICS @ +5.0V Supply

| Parameter | Symbol | Conditions | Min | Typ.(1) | Max | Unit |
|---|---|---|---|---|---|---|
| Analog Signal Range | $V_{A1}/V_{A2}/V_B$ | | 0 | | $V_{CC}$ | V |
| $A_1$ On-Resistance | $R_{ON(A1)}$ | $V_{CC}$ = 5.0V; $I_B$ =-10mA ; $V_{A1}$=3.5V | - | 2.7 | - | Ω |
| $A_2$ On-Resistance | $R_{ON(A2)}$ | $V_{CC}$ = 5.0V; $I_B$ =-10mA ; $V_{A2}$ =3.5V | - | 2.7 | - | Ω |
| $A_1$ On-Resistance Flatness NOTE2 | $R_{FLAT(A1)}$ | $V_{CC}$ = 5.0V; $I_B$ =-10mA ; $V_{A1}$=3.5V | - | 0.8 | - | Ω |
| $A_2$ On-Resistance Flatness NOTE2 | $R_{FLAT(A2)}$ | $V_{CC}$ = 5.0V; $I_B$ =-10mA ; $V_{A2}$ =3.5V | - | 0.8 | - | Ω |
| On-Resistance Match Between Channels NOTE3 | $\Delta R_{ON}$ | $V_{CC}$ = 5.0V; $I_B$ =-10mA ; $V_{A2}$ /$V_{A1}$=3.5 | - | 0.15 | - | Ω |
| $A_1$ or $A_2$ Off Leakage Current | $I_{OFF(A1)}$ or $I_{OFF(A2)}$ | $V_{CC}$ = 5.5V; $V_{A1}$ or $V_{A2}$ = 4.5V, 1.0V; $V_B$ = 1.0V, 4.5 V | - | 0.01 | 1 | μA |
| $A_1$ or $A_2$ On Leakage Current | $I_{ON(A1)}$ $I_{ON(A2)}$, $I_{ON(B)}$ | $V_{CC}$ = 5.5V; $V_{A1}$ or $V_{A2}$ = 4.5V, 1.0V; $V_B$ = 1.0V, 4.5 V or floating | - | 0.01 | 1 | μA |
| Input Voltage High | $V_{IH}$ | Minimum High Level Input Voltage | 1.5 | - | - | V |
| Input Voltage Low | $V_{IL}$ | Maximum Low Level Input Voltage | - | - | 0.6 | V |
| Input Leakage Current | $I_{ENB}$ | $V_{ENB}$ = 0 or $V_{CC}$ | - | 0.01 | 1 | μA |

DAYNAMIC CHARACTERISTICS @ +5.0V Supply

| Parameter | Symbol | Conditions | | Min | Typ.(1) | Max | Unit |
|---|---|---|---|---|---|---|---|
| Turn-On Time | $T_{ON}$ | $V_{CC}$ = 5.0V; $V_{A1}$ or $V_{A2}$ = 3.0V, $R_L$ =300Ω; $C_L$ = 35pF, $V_{IH}$=1.5V,$V_{IL}$=0V | | - | 25 | - | ns |
| Turn-Off Time | $T_{OFF}$ | $V_{CC}$ = 5.0V; $V_{A1}$ or $V_{A2}$ = 3.5V, $R_L$ =300Ω; $C_L$ = 35pF, $V_{IH}$=1.5V,$V_{IL}$=0V | | - | 17 | - | ns |
| Break-Before-Make Time | $T_{BBM}$ | $V_{CC}$ = 5.0V; $V_{A1}$ or $V_{A2}$ = 3.5V, $R_L$ = 300Ω; $C_L$ = 35pF | | - | 8.5 | - | ns |
| NC OFF Capacitance | $C_{OFF(A1)}$ | f = 1MHz | | - | 5.5 | - | pF |
| NO OFF Capacitance | $C_{OFF(A2)}$ | f = 1MHz | | - | 5.5 | - | pF |
| NC ON Capacitance | $C_{ON(A1)}$ | f = 1MHz | | - | 15.5 | - | pF |
| NO ON Capacitance | $C_{ON(A2)}$ | f = 1MHz | | - | 15.5 | - | pF |
| 3dB Bandwidth | $f_{3dB}$ | Signal = 0dBm, $R_L$ = 50Ω, $C_L$ = 5pF | | - | 350 | - | MHz |
| Off Isolation NOTE4 | $V_{ISO}$ | $R_L$ = 50Ω, $C_L$ = 5pF, Signal = 0dBm | f = 1MHz | - | -84 | - | dB |
| | | | f =10MHz | - | -51 | - | dB |
| Power Supply Range | $V_{CC}$ | | | 1.8 | - | 5.5 | V |

NOTE1: Typical characteristics are at +25°C

NOTE2: Flatness is defined as the difference between the maximum and minimum value of on resistance as measured over the specified analog signal ranges.

NOTE3: $\triangle R_{ON} = R_{ON(MAX)} - R_{ON(MIN)}$, between $A_1$ and $A_2$ .

NOTE4: Off Channel Isolation = $20\log_{10}[(V_{A1\backslash A2})/V_B]$

## TEST CIRCUIT

1. Test Circuit for On Resister

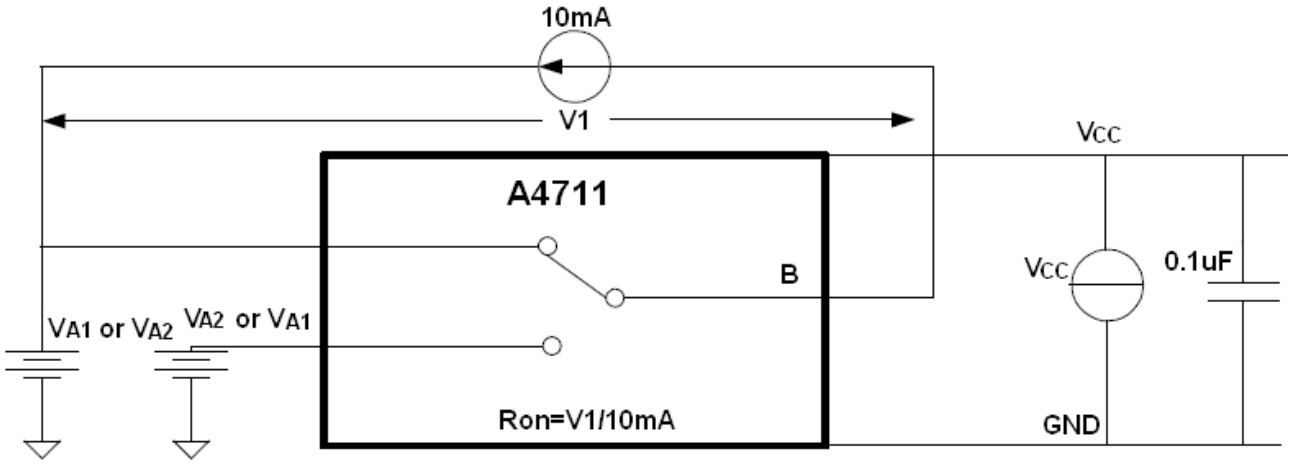


2. Test Circuit for Bandwidth

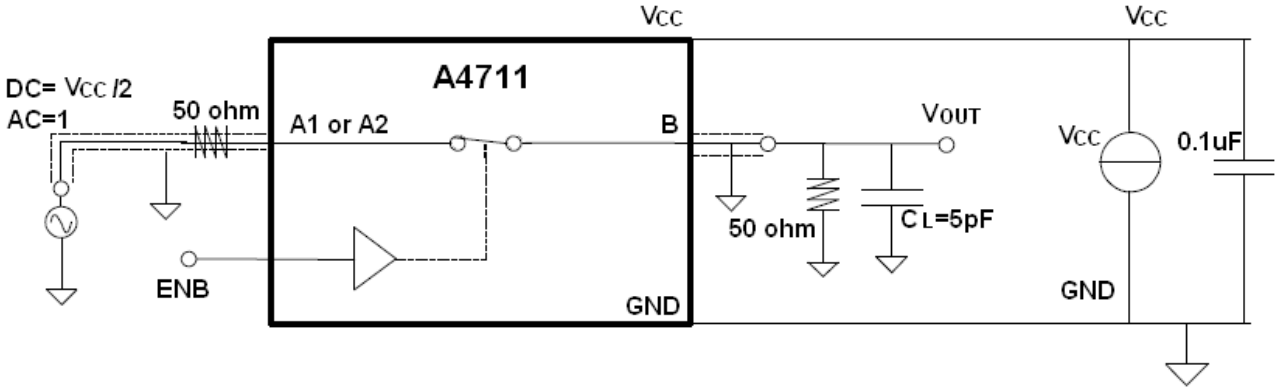


3. Test Circuit for Off Isolation

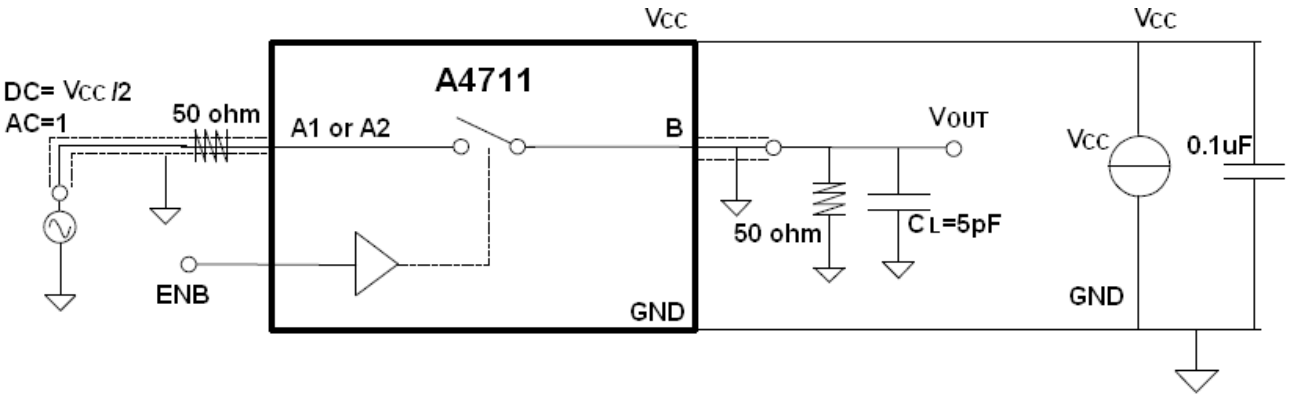

4. Test Circuit for Switch Times

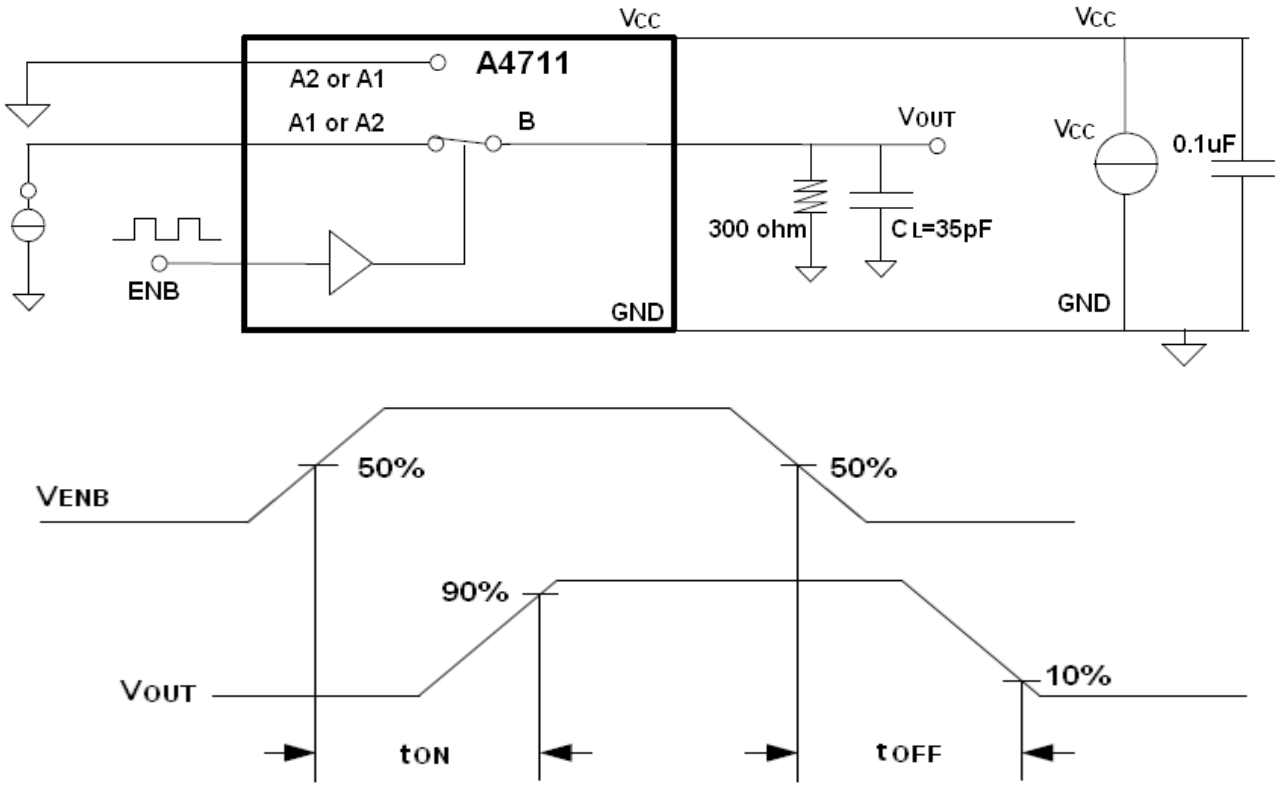


5. Test Circuit for Break-Before-Make Time Delay, $t_D$

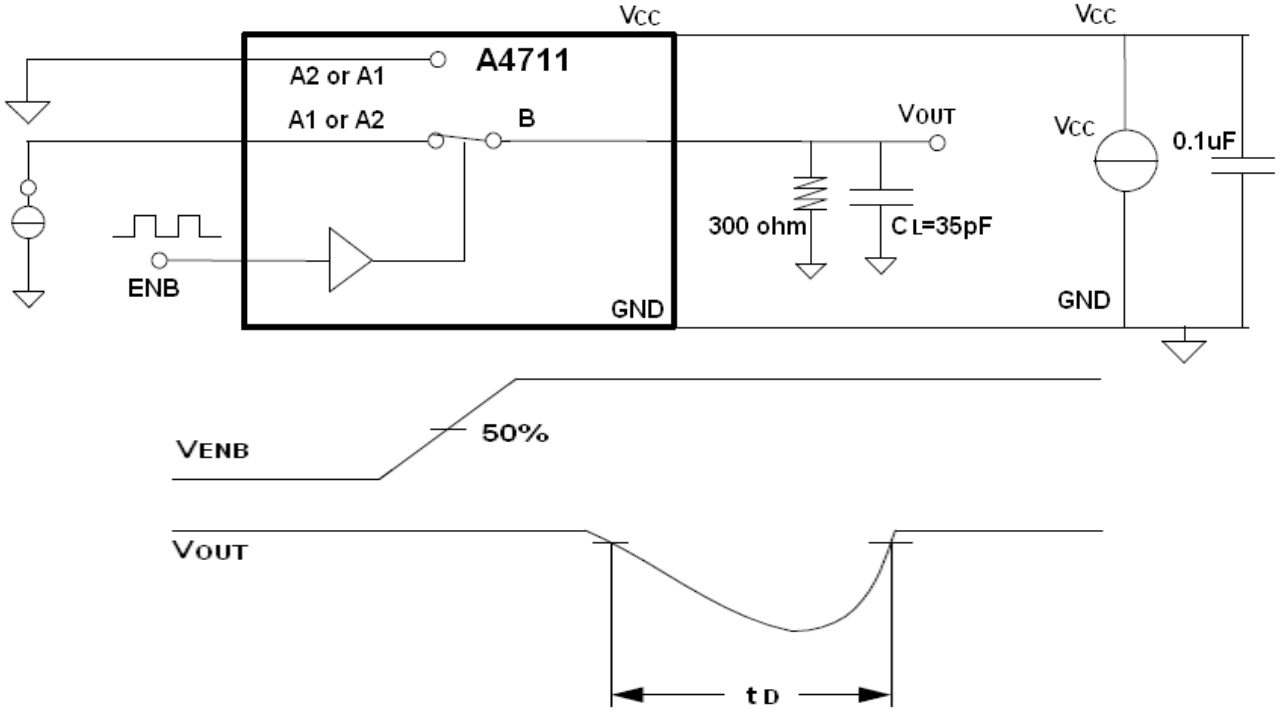

## BLOCK DIAGRAM

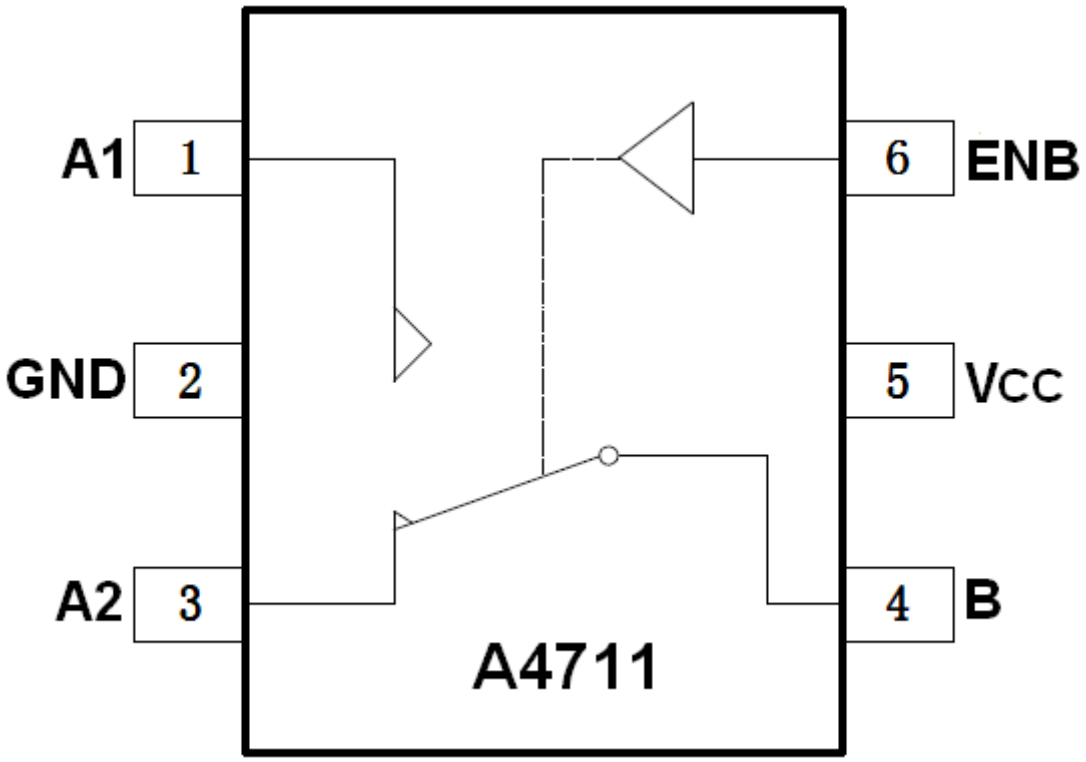

## PACKAGE INFORMATION

Dimension in SC70-6 Package (Unit: mm)

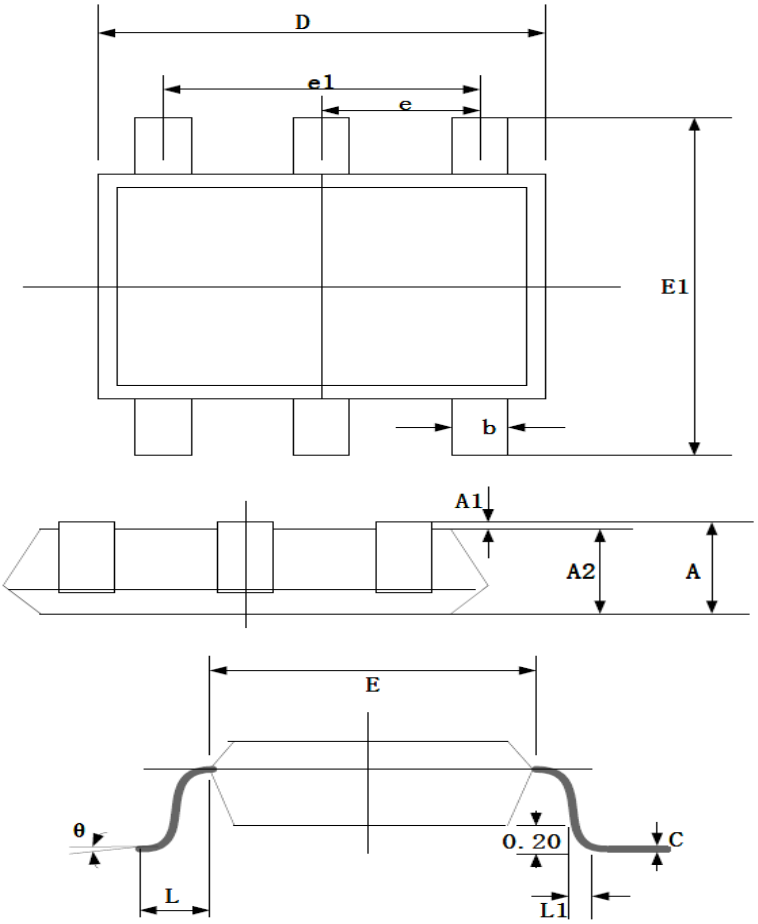


| Symbol | Min | Max |
|---|---|---|
| A | 0.900 | 1.100 |
| A1 | 0.000 | 0.100 |
| A2 | 0.900 | 1.000 |
| b | 0.150 | 0.350 |
| c | 0.080 | 0.150 |
| D | 2.000 | 2.200 |
| E | 1.150 | 1.350 |
| E1 | 2.150 | 2.450 |
| e | 0.065 TYP | |
| e1 | 1.200 | 1.400 |
| L | 0.525 REF | |
| L1 | 0.260 | 0.460 |
| θ | 0° | 8° |

## IMPORTANT NOTICE

AiT Semiconductor Inc. (AiT) reserves the right to make changes to any its product, specifications, to discontinue any integrated circuit product or service without notice, and advises its customers to obtain the latest version of relevant information to verify, before placing orders, that the information being relied on is current.

AiT Semiconductor Inc.'s integrated circuit products are not designed, intended, authorized, or warranted to be suitable for use in life support applications, devices or systems or other critical applications. Use of AiT products in such applications is understood to be fully at the risk of the customer. As used herein may involve potential risks of death, personal injury, or servere property, or environmental damage. In order to minimize risks associated with the customer's applications, the customer should provide adequate design and operating safeguards.

AiT Semiconductor Inc. assumes to no liability to customer product design or application support. AiT warrants the performance of its products of the specifications applicable at the time of sale.