JIANGSU CHANGJIANG ELECTRONICS TECHNOLOGY CO., LTD

TO-92 Plastic-Encapsulate Transistors

A42 TRANSISTOR（NPN）

FEATURES

Power dissipation

P_{CM} : 0.625 W（Tamb=25℃）

Collector current

I_{CM} : 0.5 A

Collector-base voltage

$V_{(BR)CBO}$: 300 V

Operating and storage junction temperature range

T_J，T_{stg}: -55℃ to +150℃

TO—92



1.EMITTER

2.BASE

3.COLLECTOR

1 2 3

ELECTRICAL CHARACTERISTICS（Tamb=25℃ unless otherwise specified）

Parameter	Symbol	Test conditions	MIN	TYP	MAX	UNIT
Collector-base breakdown voltage	$V(BR)_{CBO}$	I_C= 100μA， I_E=0	300			V
Collector-emitter breakdown voltage	$V(BR)_{CEO}$	I_C= 1 mA， I_B=0	300			V
Emitter-base breakdown voltage	$V(BR)_{EBO}$	I_E= 100μA， I_C=0	5			V
Collector cut-off current	I_{CBO}	V_{CB}= 200 V I_E=0			0.25	μA
Emitter cut-off current	I_{EBO}	V_{EB}= 5 V， I_C=0			0.1	μA
DC current gain	$h_{FE\ (1)}$	V_{CE}= 10 V, I_C= 1 mA	60			
	$h_{FE\ (2)}$	V_{CE}= 10V, IC = 10 mA	80		250	
	$H_{FE\ (3)}$	V_{CE}= 10 V, I_C=30 mA	75			
Collector-emitter saturation voltage	V_{CE}(sat)	I_C= 20 mA, I_B= 2 mA			0.2	V
Base-emitter saturation voltage	V_{BE}(sat)	I_C= 20mA, I_B= 2 mA			0.9	V
Transition frequency	f_T	V_{CE}=20 V, I_C= 10 mA f =30MHz	50			MHz

CLASSIFICATION OF $h_{FE(2)}$

Rank	A	B_1	B_2	C
Range	80-100	100-150	150-200	200-250

Typical Characteristics

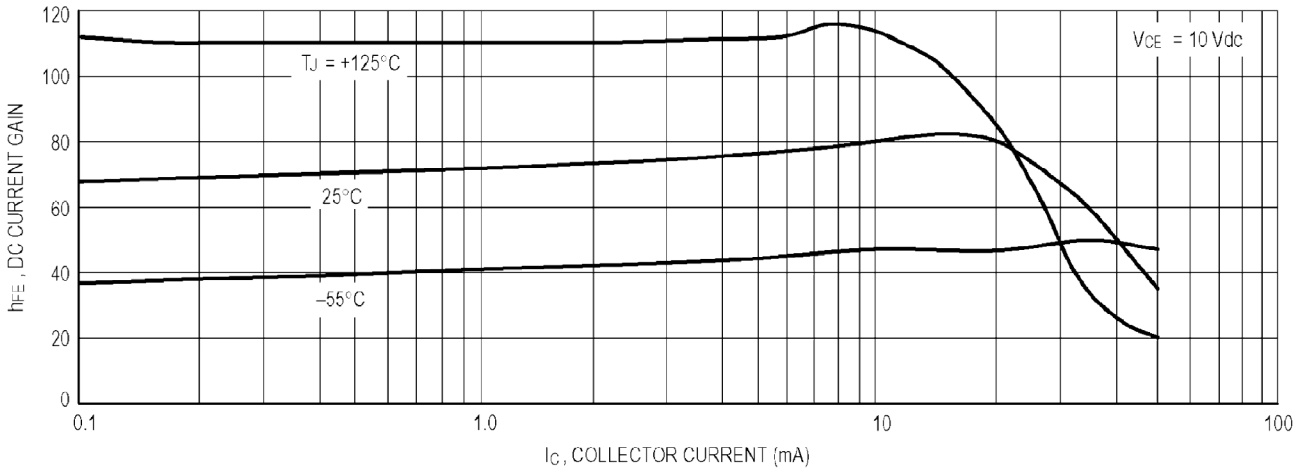

DC Current Gain

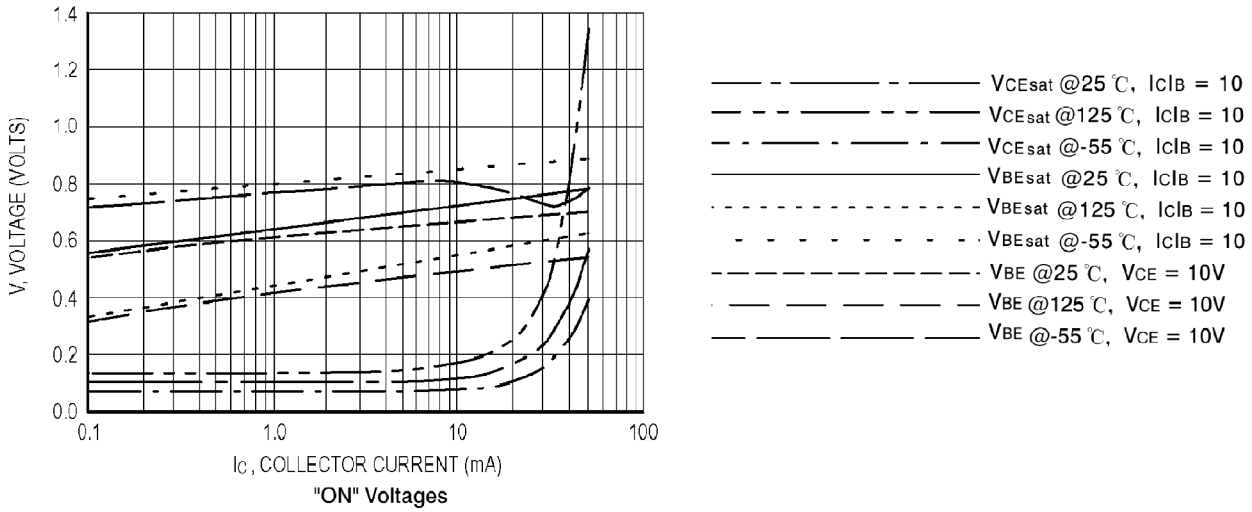

"ON" Voltages

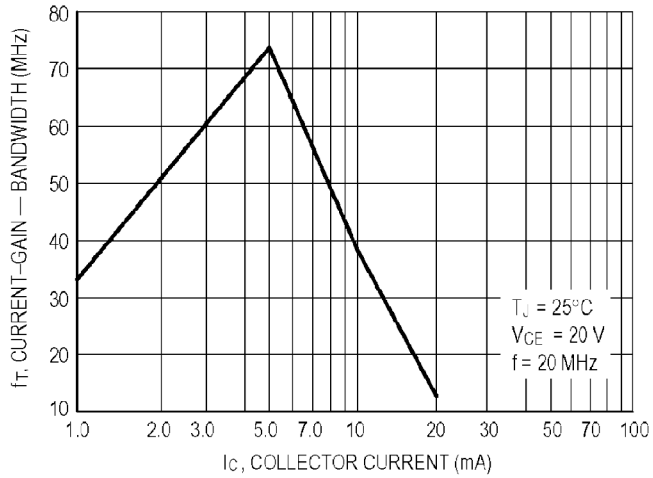

Current–Gain — Bandwidth

TO-92 PACKAGE OUTLINE DIMENSIONS

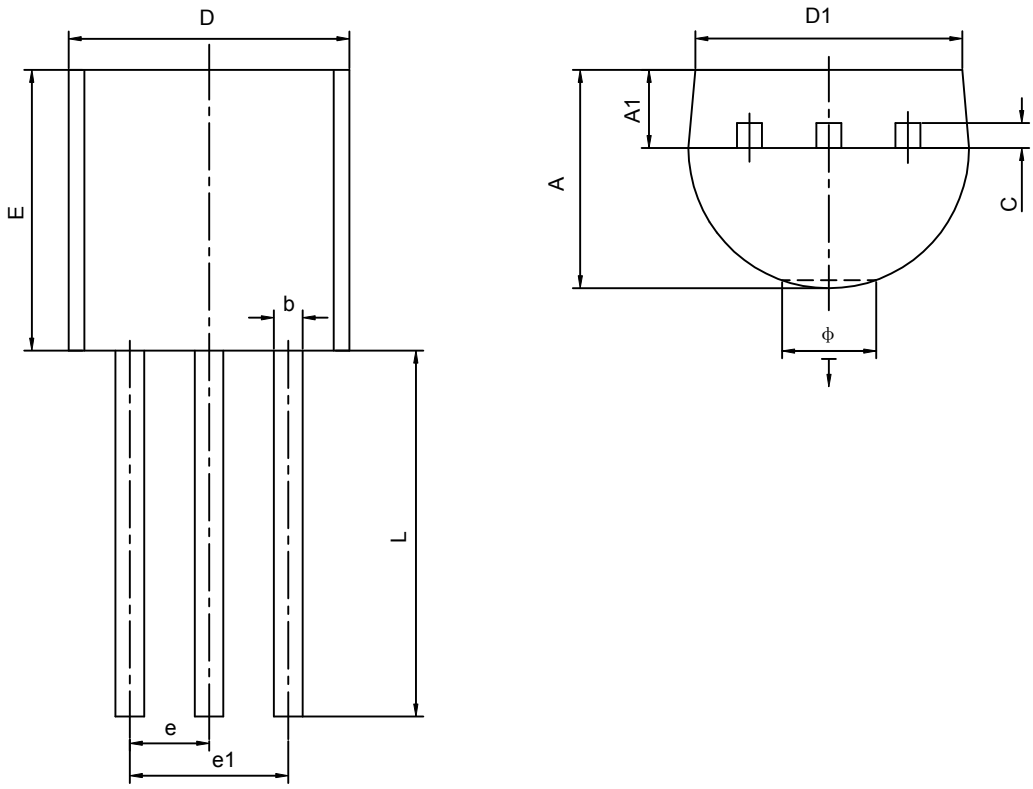

Symbol	Dimensions In Millimeters		Dimensions In Inches	
	Min	Max	Min	Max
A	3.300	3.700	0.130	0.146
A1	1.100	1.400	0.043	0.055
b	0.380	0.550	0.015	0.022
c	0.360	0.510	0.014	0.020
D	4.400	4.700	0.173	0.185
D1	3.430		0.135	
E	4.300	4.700	0.169	0.185
e	1.270TYP		0.050TYP	
e1	2.440	2.640	0.096	0.104
L	14.100	14.500	0.555	0.571
Ö		1.600		0.063
⊤	0.000	0.380	0.000	0.015