8-Channel Source Driver

Features and Benefits

- TTL, DTL, PMOS, or CMOS compatible inputs
- 500 mA output source current capability
- Transient-protected outputs
- Output breakdown voltage to 50 V
- DIP or SOIC packaging

Package: 20-pin SOICW (suffix LW)

Not to scale

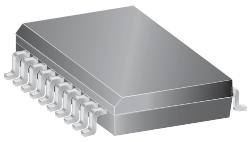

(drop-in replacement for discontinued 18-pin SOIC variants)

Description

Recommended for high-side switching applications that benefit from separate logic and load grounds, these devices encompass load supply voltages to 50 V and output currents to -500 mA. These 8-channel source drivers are useful for interfacing between low-level logic and high-current loads. Typical loads include relays, solenoids, lamps, stepper and/or servo motors, print hammers, and LEDs.

All devices may be used with 5 V logic systems — TTL, Schottky TTL, DTL, and 5 V CMOS. The device packages offered are electrically interchangeable, and will withstand a maximum output off voltage of 50 V, and operate to a minimum of 5 V. All devices in this series integrate input current limiting resistors and output transient suppression diodes, and are activated by an active high input.

The package is a 20-pin wide-body SOIC with improved thermal characteristics compared to the 18-pin SOIC version it replaces (100% pin-compatible electrically).

The package is lead (Pb) free, with 100% matte-tin leadframe plating.

Simplified Block Diagram

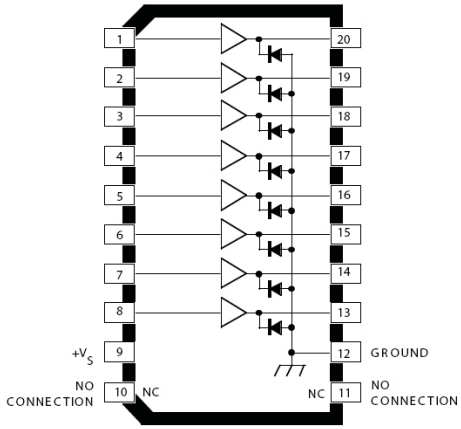

(NC pins, 10 and 11, not present on discontinued 18-pin LW package)

Selection Guide

Part Number	Package	Packing	Ambient Temperature T_A (°C)
A2982SLWTR-T	20-pin SOICW	1000 per reel	–20 to 85

Absolute Maximum Ratings

Characteristic	Symbol	Notes	Rating	Units
Output Voltage Range	V_{CE}		5 to 50	V
Input Voltage	V_{IN}		20	V
Output Current	I_{OUT}		–500	mA
Package Power Dissipation	P_D	See graph	–	–
Operating Ambient Temperature	T_A	Range S	–20 to 85	ºC
Maximum Junction Temperature	T_J(max)		150	ºC
Storage Temperature	T_{stg}		–55 to 150	ºC

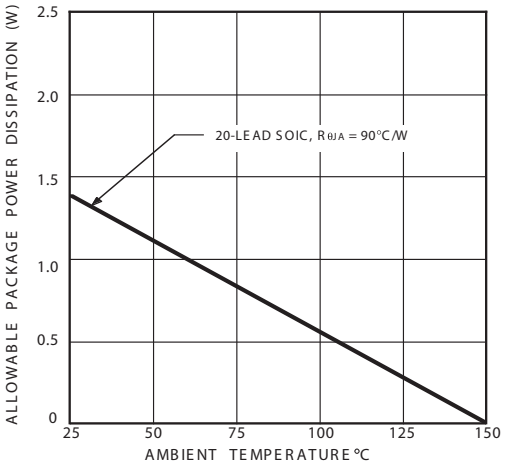

One of Eight Drivers

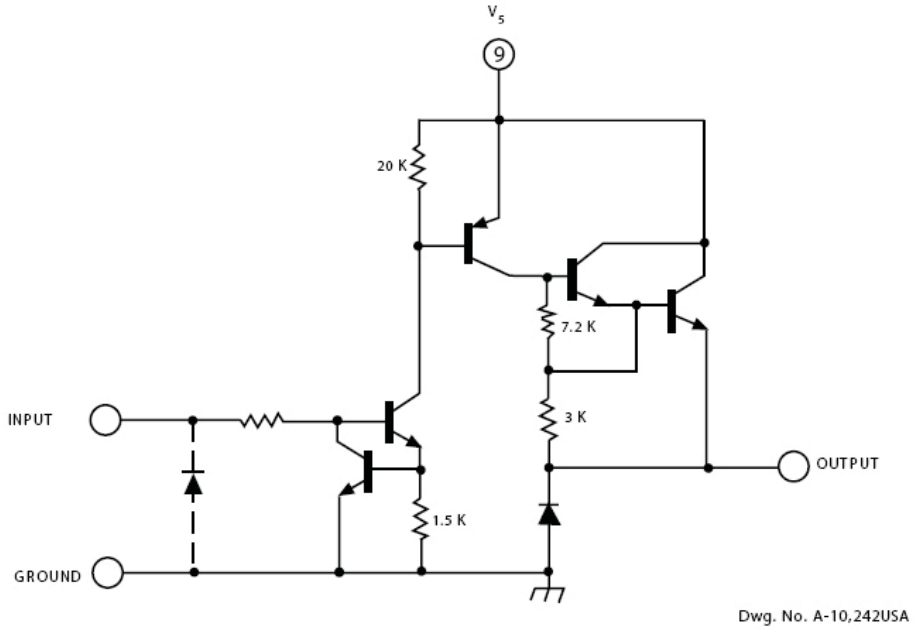

Typical electrosensitive printer application

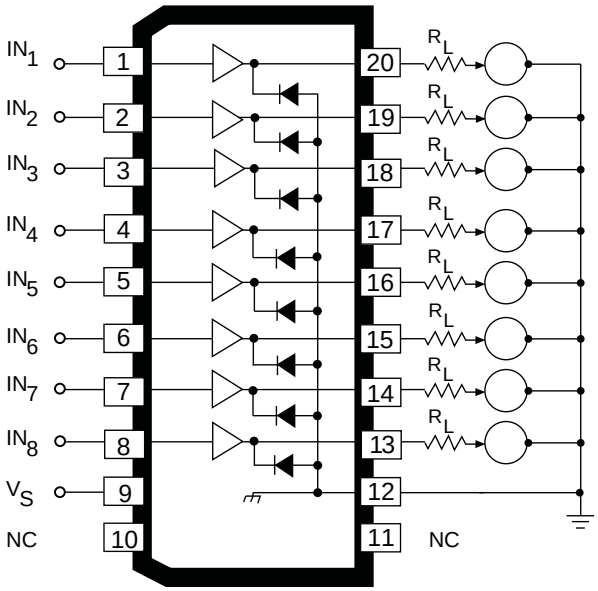

Pins 10 and 11 can float; other pins match discontinued 18-pin SOIC: 1 to 9 same, pins 12 to 20 match pins 10 to 18

ELECTRICAL CHARACTERISTICS[1,2] at T_A = +25°C (unless otherwise specified).

Characteristic	Symbol	Test Conditions	Test Fig.	Min.	Typ.	Max.	Units
Output Leakage Current[3]	I_{CEX}	V_{IN} = 0.4 V, V_S = 50 V	1	—	—	20	µA
Output Sustaining Voltage	$V_{CE(SUS)}$	I_{OUT} = -45 mA	—	35	—	—	V
Collector-Emitter Saturation Voltage	$V_{CE(SAT)}$	V_{IN} = 2.4 V, I_{OUT} = -100 mA	2	—	1.6	1.8	V
		V_{IN} = 2.4 V, I_{OUT} = -225 mA	2	—	1.7	1.9	V
		V_{IN} = 2.4 V, I_{OUT} = -350 mA	2	—	1.8	2.0	V
Input Current	$I_{IN(ON)}$	V_{IN} = 2.4 V	3	—	140	200	µA
		V_{IN} = 12 V	3	—	1.25	1.93	mA
Output Source Current (Outputs Open)	I_{OUT}	V_{IN} = 2.4 V, V_{CE} = 2.0 V	2	-350	—	—	mA
Supply Current Leakage Current	I_S	V_{IN} = 2.4 V*, V_S = 50 V	4	—	—	10	mA
Clamp Diode Current	I_R	V_R = 50 V, V_{IN} = 0.4 V*	5	—	—	50	µA
Clamp Diode Forward Voltage	V_F	I_F = 350 mA	6	—	1.5	2.0	V
Turn-On Delay	t_{ON}	0.5 E_{IN} to 0.5 E_{OUT}, R_L = 100Ω, V_S = 35 V	—	—	0.3	2.0	µs
Turn-Off Delay[4]	t_{OFF}	0.5 E_{IN} to 0.5 E_{OUT}, R_L = 100Ω, V_S = 35 V, See Note	—	—	2.0	10	µs

[1]Negative current is defined as coming out of (sourcing) the specified device terminal.

[2]All unused inputs must be connected to ground. Pull-down resistors (approximately 10 kΩ) are recommended for inputs that are allowed to float while power is being applied to V_S.

[3]All inputs simultaneously.

[4]Turn-off delay is influenced by load conditions. Systems applications well below the specified output loading may require timing considerations for some designs, i.e., multiplexed displays or when used in combination with sink drivers in a totem pole configuration.

TEST FIGURES

Figure 1

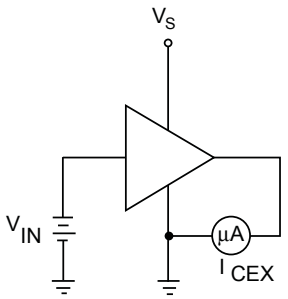

Dwg. No. A-11,083

Figure 2

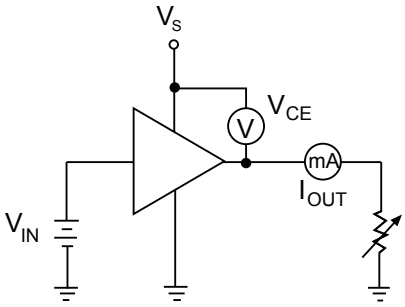

Dwg. No. A-11,084

Figure 3

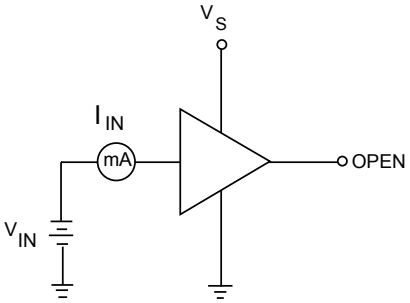

Dwg. No. A-11,085

Figure 4

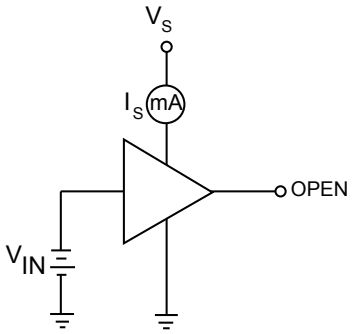

Dwg. No. A-11,086

Figure 5

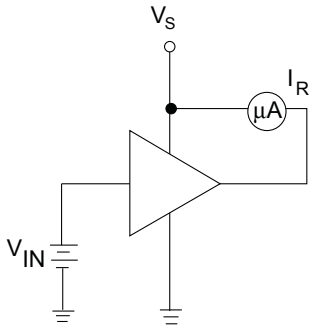

Dwg. No. A-11,087

Figure 6

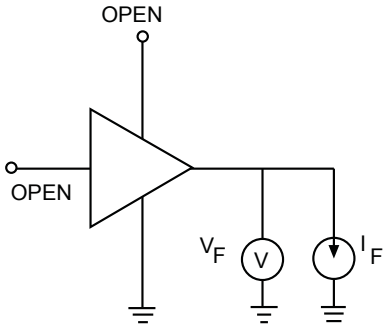

Dwg. No. A-11,088

Allowable peak collector current as a function of duty cycle

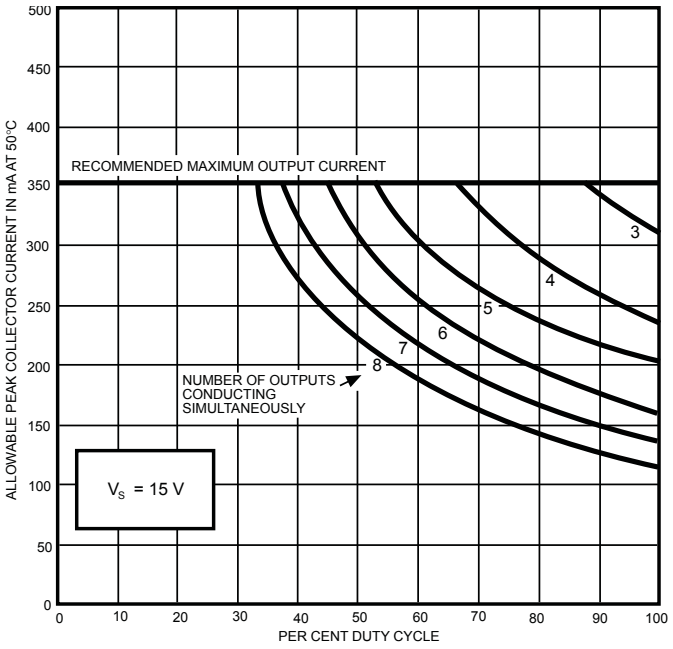

Dwg. No. A-11,107B

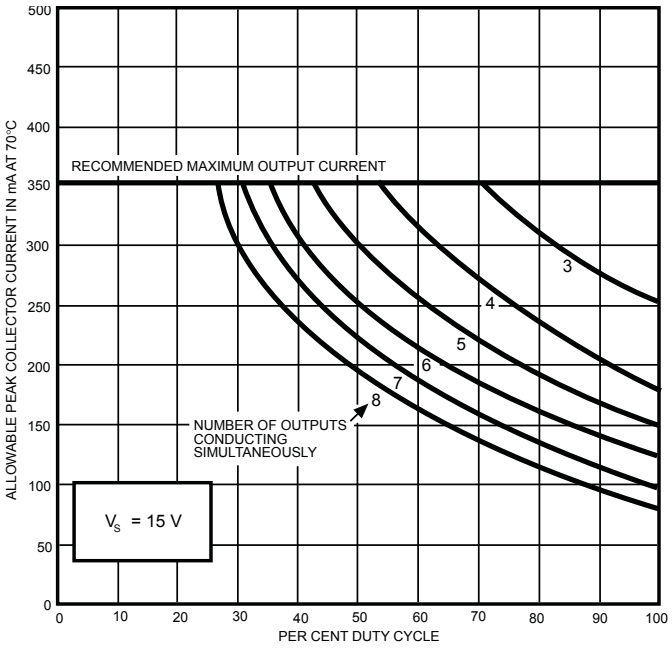

Dwg. No. A-11,108B

Input current as a function of input voltage

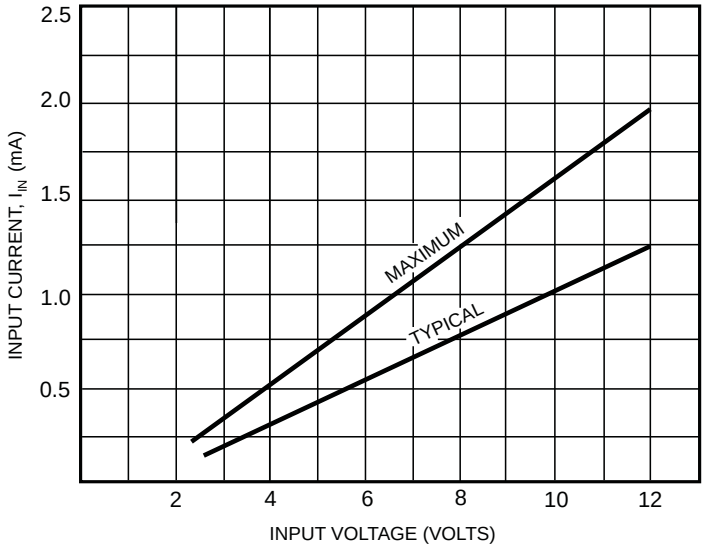

Dwg. No. A-11,115B

LW Package, 20-Pin SOICW

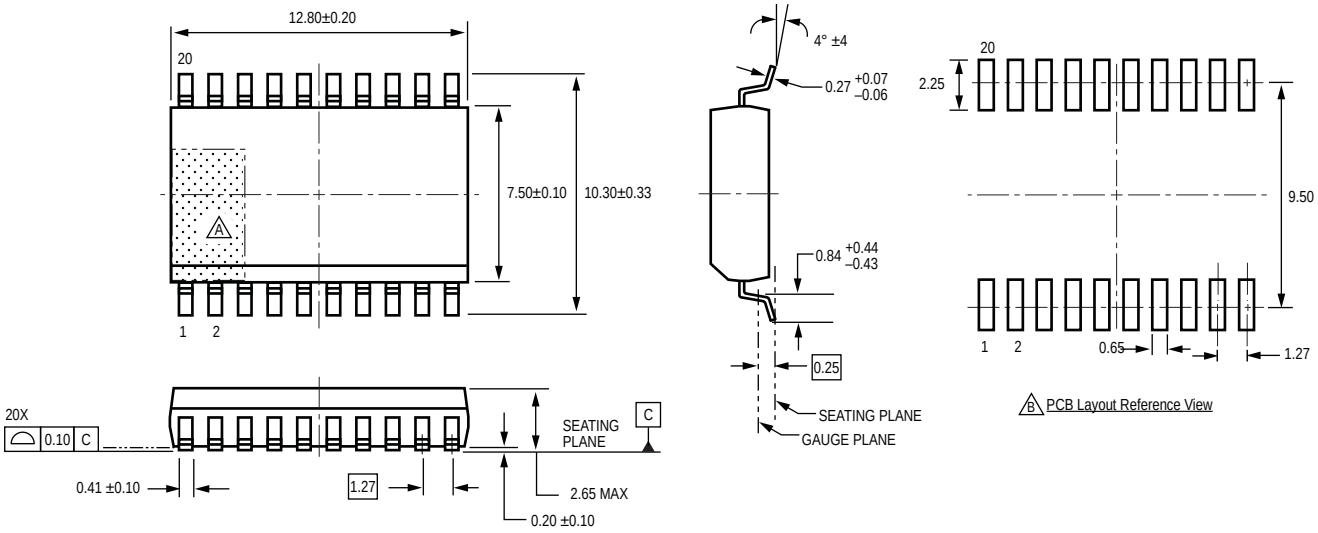

For Reference Only
Dimensions in millimeters
(Reference JEDEC MS-013 AC)
Dimensions exclusive of mold flash, gate burrs, and dambar protrusions
Exact case and lead configuration at supplier discretion within limits shown

A Terminal #1 mark area

B Reference pad layout (reference IPC SOIC127P1030X265-20M)
All pads a minimum of 0.20 mm from all adjacent pads; adjust as necessary to meet application process requirements and PCB layout tolerances

Revision History

Revision	Revision Date	Description of Revision
Rev. U	April 30, 2012	Update product availability

Copyright ©1977-2012, Allegro MicroSystems, Inc.
Allegro MicroSystems, Inc. reserves the right to make, from time to time, such departures from the detail specifications as may be required to permit improvements in the performance, reliability, or manufacturability of its products. Before placing an order, the user is cautioned to verify that the information being relied upon is current.
Allegro's products are not to be used in life support devices or systems, if a failure of an Allegro product can reasonably be expected to cause the failure of that life support device or system, or to affect the safety or effectiveness of that device or system.
The information included herein is believed to be accurate and reliable. However, Allegro MicroSystems, Inc. assumes no responsibility for its use; nor for any infringement of patents or other rights of third parties which may result from its use.

For the latest version of this document, visit our website:
www.allegromicro.com