DESCRIPTION

The A2203 is a Class-AB audio power amplifier primarily designed for demanding mobile phones and other portable communication devices. It is capable of delivering 1.1 watts of continuous average power to an 8Ω BTL load with less than 1% distortion (THD+N) from a $5V_{DC}$ power supply.

Boomer audio power amplifiers were designed specifically to provide high quality output power with a minimal amount of external components. The A2203 does not require output coupling capacitors or bootstrap capacitors. The A2203 is ideally suited for mobile phone, and other low voltage applications where minimal power consumption is a primary requirement.

The A2203 features a low-power consumption shutdown mode. To facilitate this, Shutdown may be enable by either logic high or low pending on mode selection. Driving the shutdown mode pin either high or low enable the shutdown pin to be driven in a likewise manner to enable shutdown.

The A2203 contains advanced pop-click circuitry which eliminates noise, which would otherwise occur during turn-on and turn-off transitions.

The A2203 is unity-gain stable and can be configured by external gain-setting resistors.

The A2203 is available in MSOP8 and SOP8 packages

ORDERING INFORMATION

Package Type	Part Number	
MSOP8 SPQ : 3,000pcs/Reel	MS8	A2203MS8R
		A2203MS8VR
SOP8 SPQ : 2,500pcs/Reel	M8	A2203M8R
		A2203M8VR
Note	V: Halogen free Package R: Tape & Reel	
AiT provides all RoHS products		

FEATURES

- Ultra low shutdown current: 0.1uA (typ.)
- Improved PSRR at 217 Hz & 1 kHz: 60dB
- 2.2V ~ 5.5V operation
- Power output at 5.0V, 10%THD+N, 4Ω: 1.7W(typ.) (SOP8 package)
- Power output at 5.0V, 1% THD+N, 8Ω: 1.1W (typ.)
- 2.2V ~ 5.5V operation
- Unity-gain stable
- External gain configuration capability
- Improved circuitry eliminates pop-click noise during turn-on and turn-off transitions
- No output coupling capacitors, snubber networks or bootstrap capacitors required
- Available in MSOP8 and SOP8 Packages

APPLICATION

- Car Block Box
- Wireless handsets
- Portable electronic devices
- PDAs, Handheld computers

TYPICAL APPLICATION

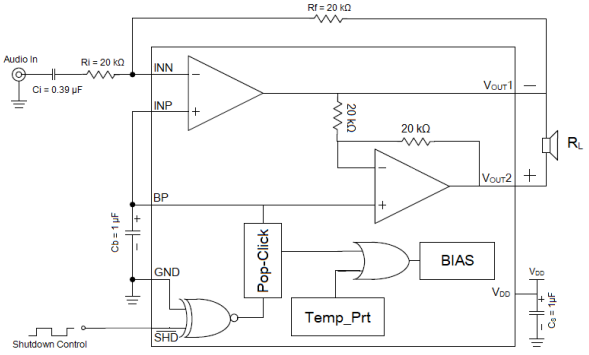

Figure 1

PIN DESCRIPTION

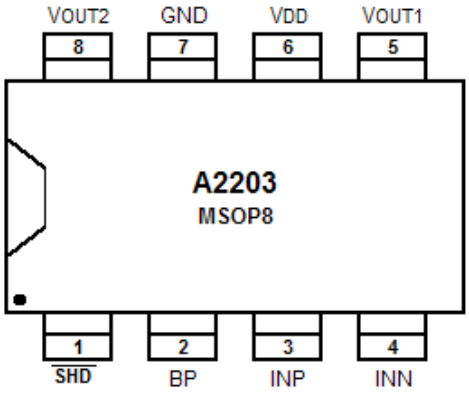

Top View

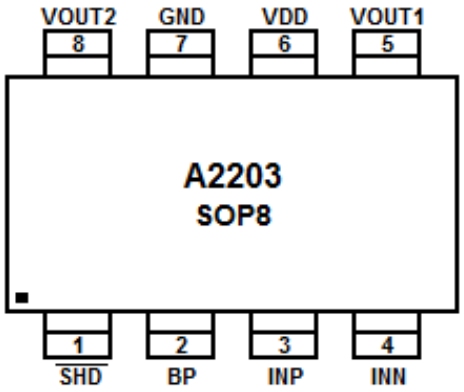

Top View

Pin #	Symbol	I/O	Functions
1	$\overline{SHD}$	I	Shut-down Logical Control, '0' is active.
2	BP	I/O	Analog ground for inner OPAs. It's about a half of V_{DD}.
3	INP	I	Positive Input
4	INN	I	Negative Input
5	V_{OUT1}	O	Negative BTL Output
6	V_{DD}	I/O	Power Supply (2.2 ~ 5.5 V)
7	GND	I/O	Ground
8	V_{OUT2}	O	Positive BTL Output

ABSOLUTE MAXIMUM RATINGS

Supply Voltage	-0.3V~6V
Input Voltage	-0.3V~V_{DD}+0.3V
Power Dissipation	See Dissipation Rating Table
Junction Temperature	-40℃~+150℃
Storage Temperature	-65℃~+150℃
Thermal Resistance	
θ_{JC}, MSOP8	56℃/W
θ_{JA} , MSOP8	190℃/W
θ_{JA} , SOP8	184℃/W
Operating Ratings	
Temperature Range	-40℃≦T_A≦85℃
Supply Voltage	2.2V≦V_{DD}≦5.5V

Stress beyond above listed “Absolute Maximum Ratings” may lead permanent damage to the device. These are stress ratings only and operations of the device at these or any other conditions beyond those indicated in the operational sections of the specifications are not implied. Exposure to absolute maximum rating conditions for extended periods may affect device reliability.

ELECTRICAL CHARACTERISTICS

The following specifications apply for the circuit shown in Figure 1, unless otherwise specified.
Limits apply for T_A = 25℃.

V_{DD} = 5V

Parameter	Symbol	Conditions	Min.	Typ.	Max.	Unit
Quiescent Power Supply Current	I_{DD}	V_{IN}=0V, 8Ω Load	-	3.0	8	mA
		V_{IN}=0V, No Load	-	2.5	7	mA
Shutdown Current	I_{SD}	V_{IN}=0V, V_{SHD}=GND, No Load	-	0.1	2	μA
Shutdown Voltage Input High	V_{SDIH}		1.2	-	-	V
Shutdown Voltage Input Low	V_{SDIL}		-	-	0.9	V
Output Offset Voltage	V_{OS}		-50	6	50	mV
Total Harmonic Distortion+Noise	THD+N	P_{OUT} =0.5Wrms, f=1kHz	-	0.07	-	%
Output Power	P_O	THD+N<=1%, f=1kHz, 8Ω Load	0.9	1.1	-	W
Power Supply Rejection Ratio	PSRR	Input terminated with 10Ω, $V_{DDRIPPLE}$=0.2V_{P-P}, f=217Hz	-	60	-	dB
		Input terminated with 10Ω, $V_{DDRIPPLE}$=0.2V_{P-P}, f=1kHz	-	61	-	dB
Wake-up Time	t_{WU}		-	100	-	ms

V_{DD} = 3V

Parameter	Symbol	Conditions	Min.	Typ.	Max.	Unit
Quiescent Power Supply Current	I_{DD}	V_{IN}=0V, 8Ω Load	-	2	7	mA
		V_{IN}=0V, No Load	-	1.5	6	mA
Shutdown Current	I_{SD}	V_{IN}=0V, V_{SHD}=GND, No Load	-	0.1	2	μA
Shutdown Voltage Input High	V_{SDIH}		1.0	-	-	V
Shutdown Voltage Input Low	V_{SDIL}		-	-	0.7	V
Output Offset Voltage	V_{OS}		-50	6	50	mV
Total Harmonic Distortion+Noise	THD+N	P_{OUT}=0.25Wrms, f=1kHz	-	0.08	-	%
Output Power	P_O	THD+N<=1%, f=1kHz, 8Ω Load	-	310	-	mW
Power Supply Rejection Ratio	PSRR	Input terminated with 10Ω, $V_{DDRIPPLE}$=0.2V_{P-P}, f=217Hz	-	57	-	dB
		Input terminated with 10Ω, $V_{DDRIPPLE}$=0.2V_{P-P}, f=1kHz	-	58	-	dB
Wake-up Time	t_{WU}		-	75	-	ms

V_{DD} = 2.6V

Parameter	Symbol	Conditions	Min.	Typ.	Max.	Unit
Quiescent Power Supply Current	I_{DD}	V_{IN} = 0V, 8Ω Load	-	1.7	-	mA
		V_{IN} = 0V, No Load	-	1.2	-	mA
Shutdown Current	I_{SD}	V_{IN}=0V, V_{SHD}=GND, No Load	-	0.1	-	μA
Shutdown Voltage Input High	V_{SDIH}		1.0	-	-	V
Shutdown Voltage Input Low	V_{SDIL}		-	-	0.7	V
Output Offset Voltage	V_{OS}		-50	4	50	mV
Total Harmonic Distortion+Noise	THD+N	P_{OUT} =0.15Wrms, f=1kHz	-	0.08	-	%
Output Power	P_O	THD+N<=1%, f=1kHz, 8Ω Load	-	230	-	mW
Power Supply Rejection Ratio	PSRR	Input terminated with 10Ω, $V_{DDRIPPLE}$=0.2V_{P-P}, f=217Hz	-	56	-	dB
		Input terminated with 10Ω, $V_{DDRIPPLE}$=0.2V_{P-P}, f=1kHz	-	57	-	dB
Wake-up Time	t_{WU}		-	70	-	ms

TYPICAL PERFORMANCE CHARACTERISTICS

1. THDN vs. Frequency
V_{DD}=5V R_L=8Ω P_O=500mW

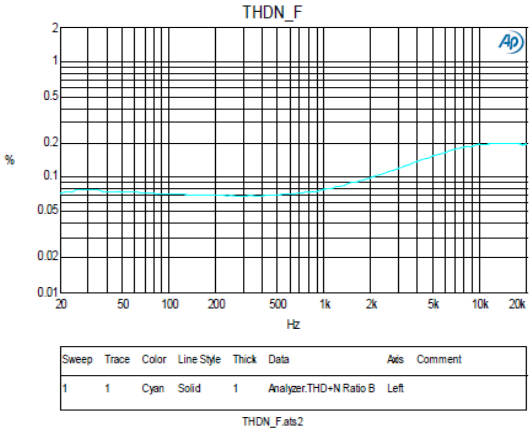

2. THDN vs. Frequency
V_{DD}=3V R_L=8Ω P_O=250mW

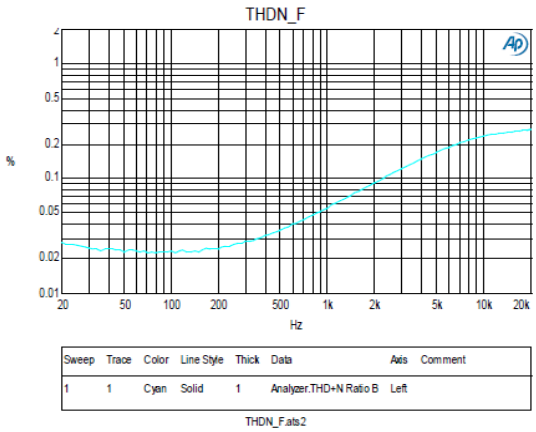

3. THDN vs. Frequency
V_{DD}=2.6V R_L=8Ω P_O=150mW

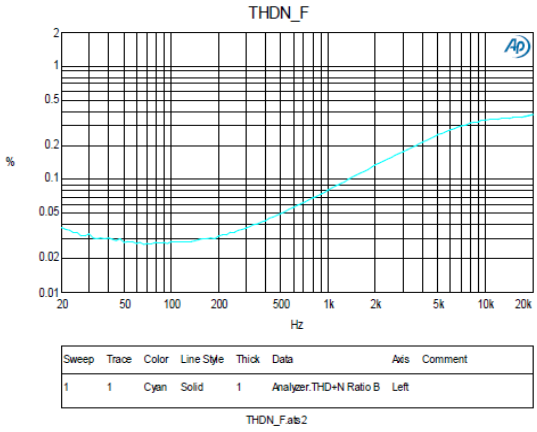

4. THDN vs. Output Power
V_{DD}=5V R_L=8Ω f=1kHz

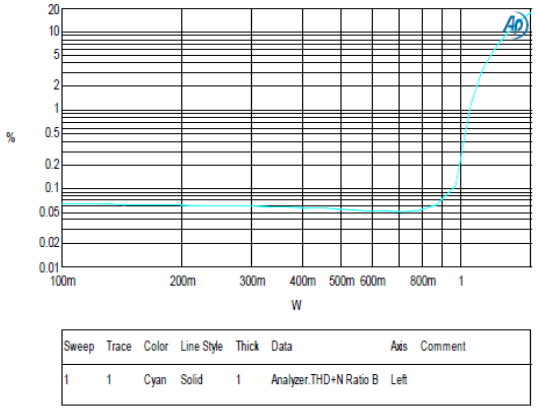

5. THDN vs. Output Power
V_{DD}=3V R_L=8Ω f=1kHz

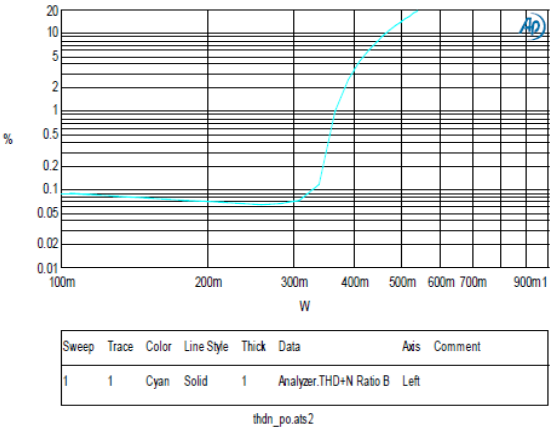

6. THDN vs. Output Power
V_{DD}=2.6V R_L=8Ω f=1kHz

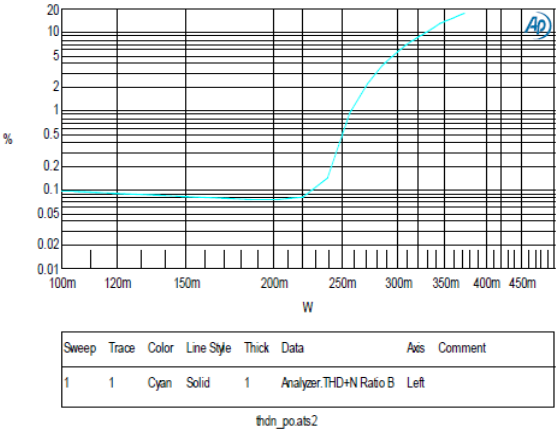

7. PSRR vs. Frequency
V_{DD}=5V R_L=8Ω

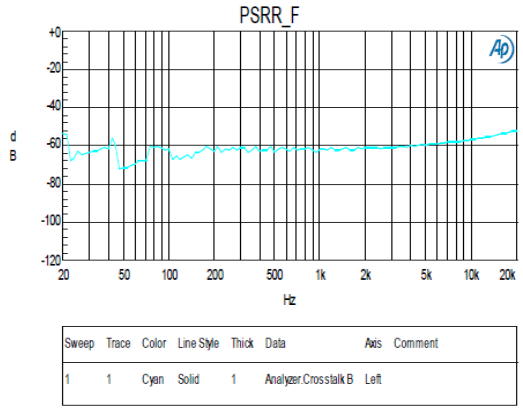

Sweep	Trace	Color	Line Style	Thick	Data	Axis	Comment
1	1	Cyan	Solid	1	Analyzer.Crosstalk B	Left	

psrr_f.ats2

8. PSRR vs. Frequency
V_{DD}=3V R_L=8Ω

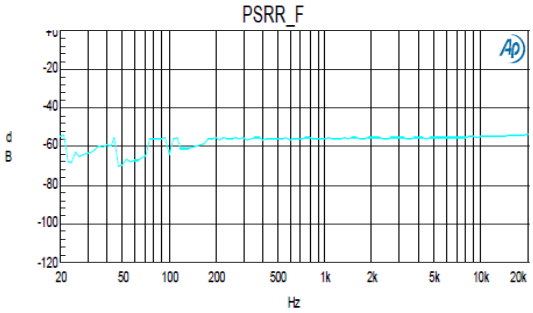

Sweep	Trace	Color	Line Style	Thick	Data	Axis	Comment
1	1	Cyan	Solid	1	Analyzer.Crosstalk B	Left	

psrr_f.ats2

9. Noise Floor 20kBW
V_{DD}=5V R_L=8Ω

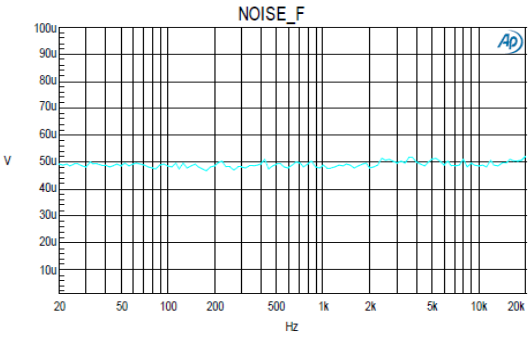

Sweep	Trace	Color	Line Style	Thick	Data	Axis	Comment
1	1	Cyan	Solid	1	Analyzer.Amplitude B	Left	

NOISE_F.ats2

DETAILED INFORMATION

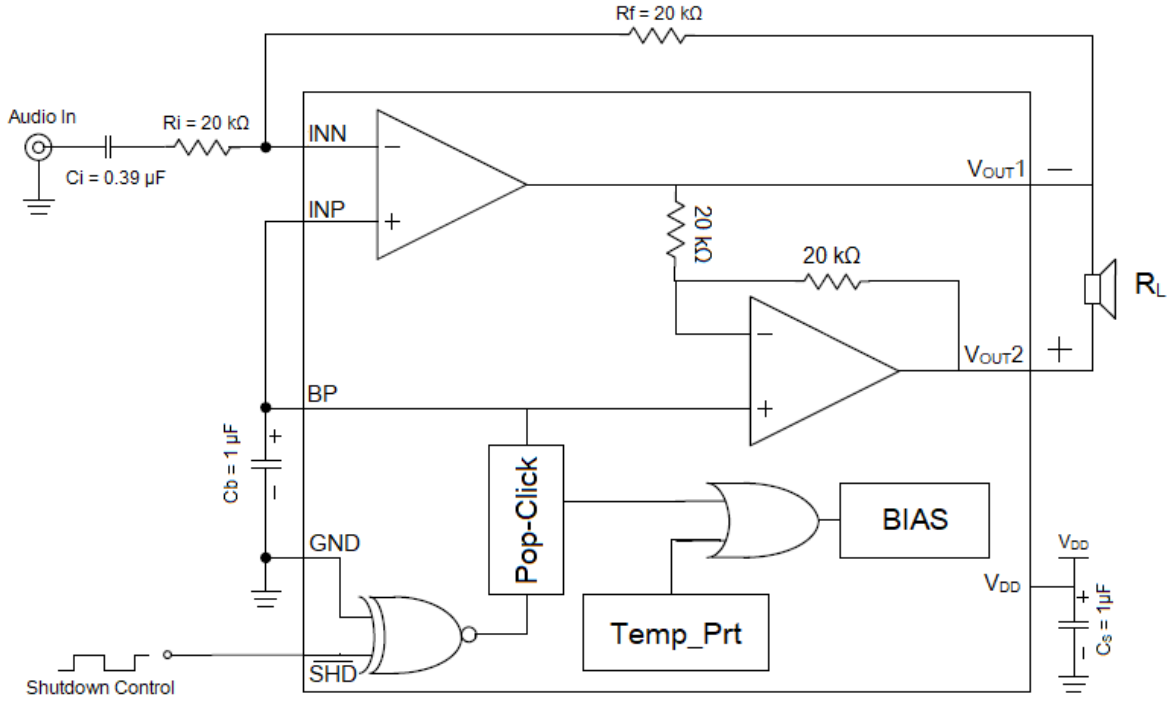

Figure. 1 A2203 Typical Application Circuit

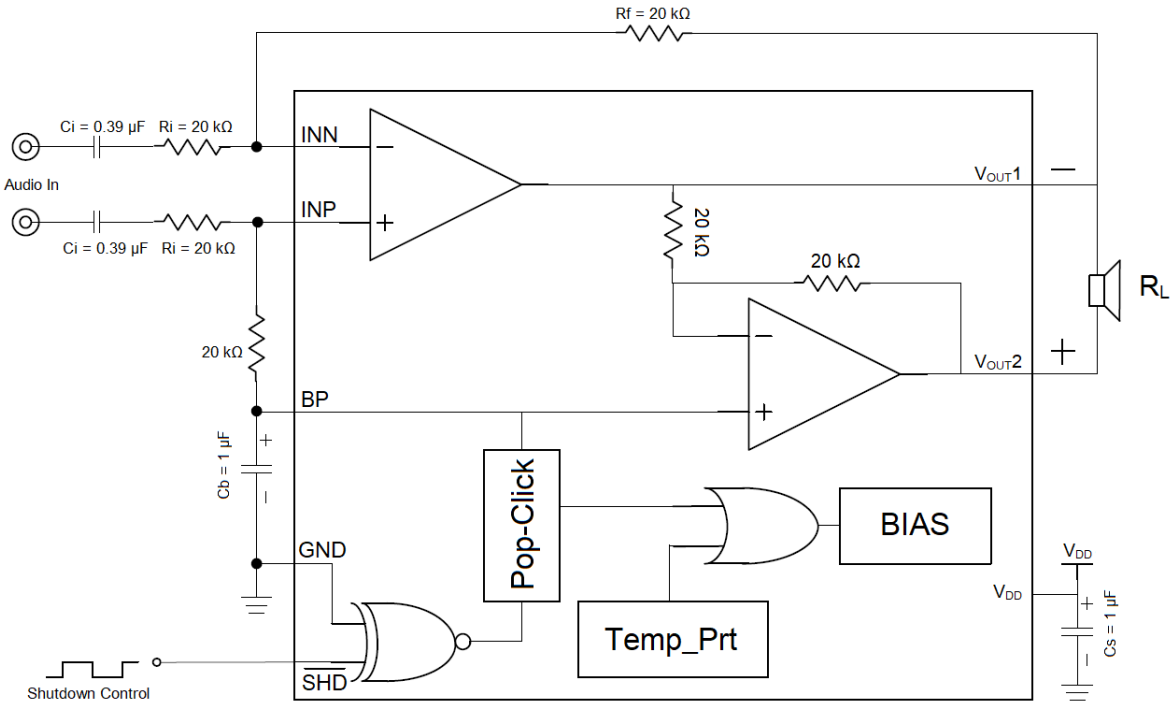

Figure. 2 A2203 Differential Amplifier Configuration

External Components Description

Components	Functional Description
Ri	Inverting input resistance which sets the closed-loop gain in conjunction with Rf. This resistor also forms a high pass filter with Ci at fc = 1/(2πRi*Ci).
Ci	Input coupling capacitor which blocks the DC voltage at the amplifiers input terminates. Also creates a high-pass filter with Ri at fc = 1/(2πRi*Ci)..
Rf	Feedback resistance which sets the closed-loop gain in conjunction with Ri. The gain is A_{VD}=2*(Rf/Ri).
Cs	Supply bypass capacitor which provides power supply filtering.
Cb	Bypass pin capacitor which provides half-supply filtering. Refer to the section.

PACKAGE INFORMATION

Dimension in MSOP8 (Unit: mm)

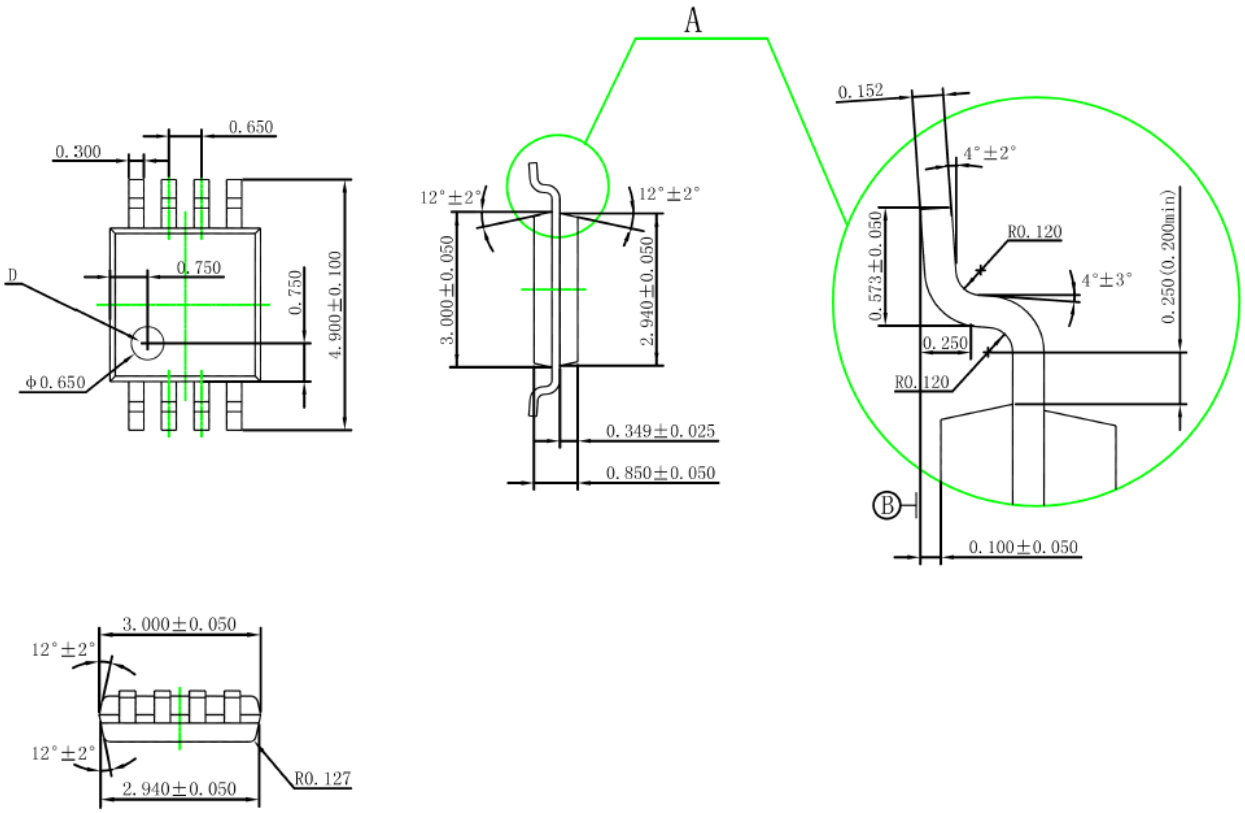

Dimension in SOP8 (Unit: mm)

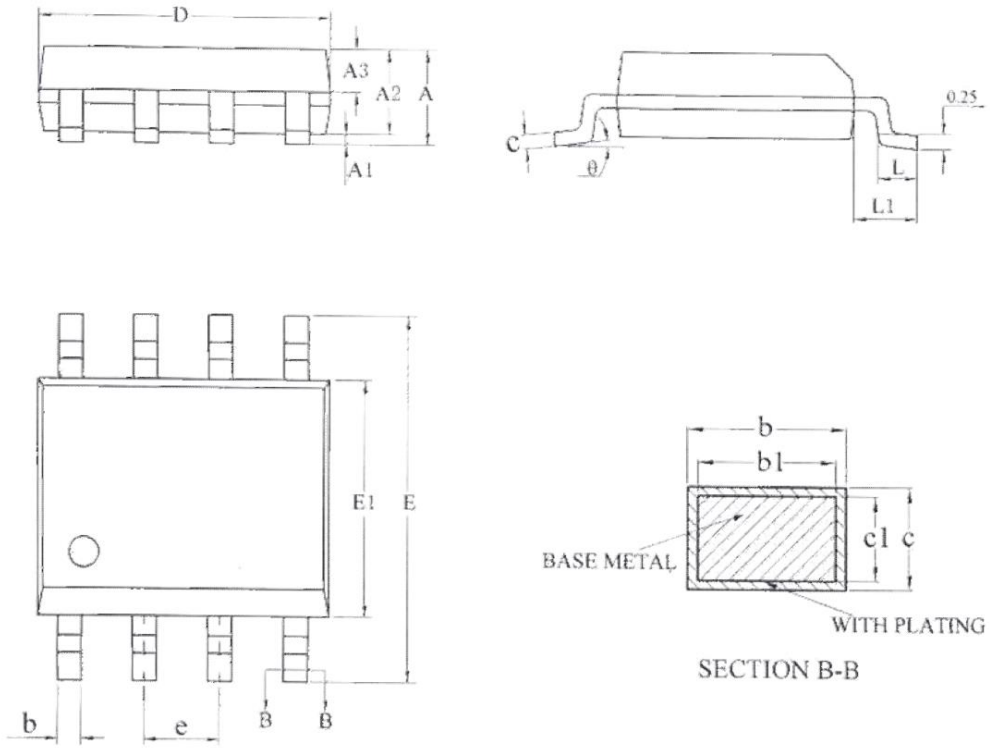

Symbol	Min	Max
A	-	1.77
A1	0.08	0.28
A2	1.20	1.60
A3	0.55	0.75
b	0.39	0.48
b1	0.38	0.43
c	0.21	0.26
c1	0.19	0.21
D	4.70	5.10
E	5.80	6.20
E1	3.70	4.10
e	1.27 BSC	
L	0.50	0.80
L1	1.05 BSC	
θ	0°	8°

IMPORTANT NOTICE

AiT Semiconductor Inc. (AiT) reserves the right to make changes to any its product, specifications, to discontinue any integrated circuit product or service without notice, and advises its customers to obtain the latest version of relevant information to verify, before placing orders, that the information being relied on is current.

AiT Semiconductor Inc.'s integrated circuit products are not designed, intended, authorized, or warranted to be suitable for use in life support applications, devices or systems or other critical applications. Use of AiT products in such applications is understood to be fully at the risk of the customer. As used herein may involve potential risks of death, personal injury, or server property, or environmental damage. In order to minimize risks associated with the customer's applications, the customer should provide adequate design and operating safeguards.

AiT Semiconductor Inc. assumes to no liability to customer product design or application support. AiT warrants the performance of its products of the specifications applicable at the time of sale.