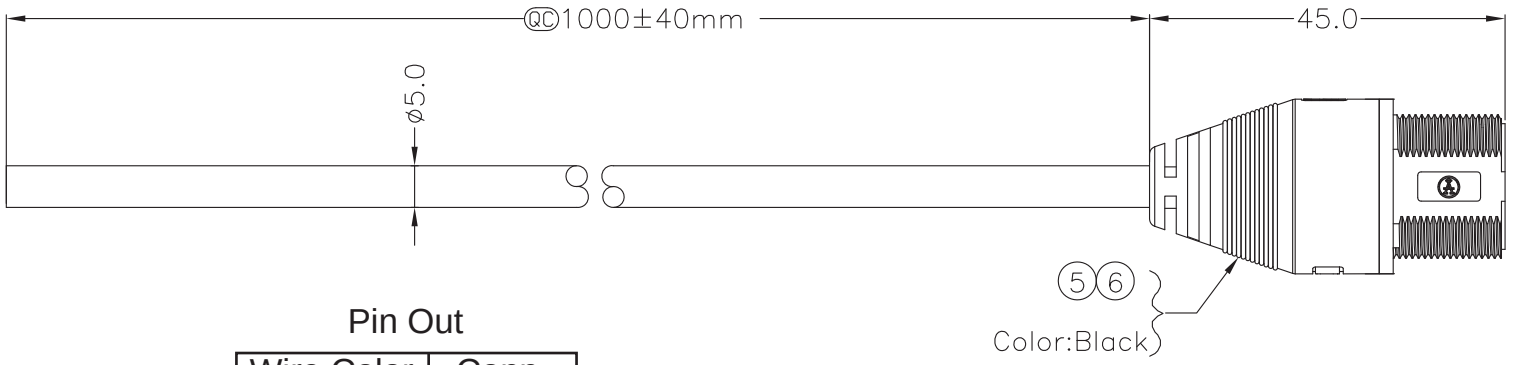

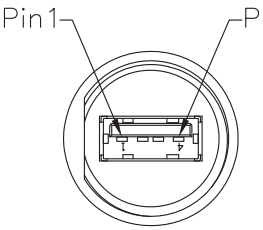

Conn.

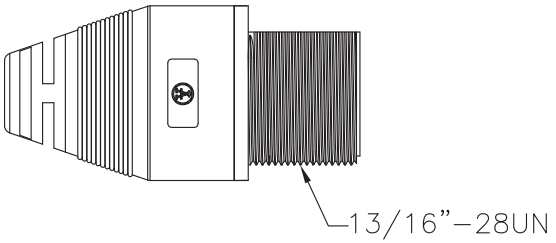

Pin Out

Wire Color	Conn.
Black	4
Green	3
White	2
Red	1
Drain	Shield

Twist

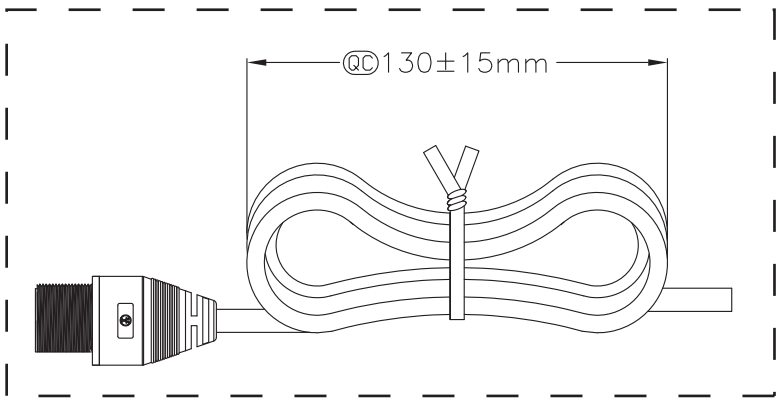

Note:

- IP67 waterproof rated
- Connector: Black, ABS
- USB: USB-A Female solder
- Cable: USB2.0 28AWG*1P+24AWG*2C+AL.My+D+B
  UV Resistant, Black, OD=5.0mm

Unit: mm

RoHS Compliant

Scale	Free
TOLERANCE	
X.X	±0.25
X.XX	±0.1
X.XXX	±0.05
DIM	TOL
X.°	±1°
X.X°	±X°
Angle	TOL

Id.	Modification	Date	Name
①	Revised part number/information	11.07.13	Wilson

	Date	Name
Drawn	07.11.11	Chappell
Approved		

ASSMANN WSW components
1840 W. Drake Drive, Suite 101 • Tempe, AZ 85283
Toll Free: 1-877-277-6266 • Email: info@assmann.us

Title
Waterproof USB2.0 cable assembly
A type, Female to Open End, 1 Meter

ASSMANN WSW-No.
A-KAB-USBA-FS-1M

Drawing-No.

rev01

Replace

Sheet 1/1