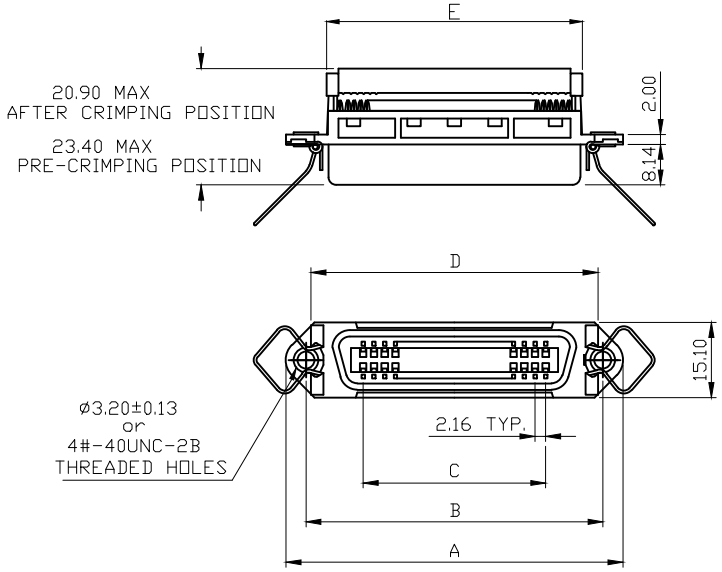

SPECIFICATIONS:

Current rating : 1A : AWG28/1, 2A : AWG26
Insulation resistance : >=1000MΩ
Dielectric withstanding volatge : 500V,at sea level
Operating temperature : -55°C ~ 105°C(limited by cable)
Contact resistance : <=20mΩ
Dielectric material : PBT & glass reinforced,UL 94V-0
Contact material : phosphor bronze
Contact plating : gold over nickel
Wire size : AWG26 & AWG28 stranded, 1.27mm conductor center flat cable
④ Operation temperature -55°C to +105°C

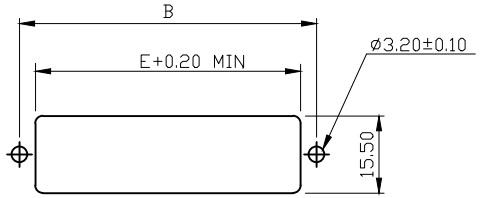

RECOMMEND FRONT MOUNT PANEL

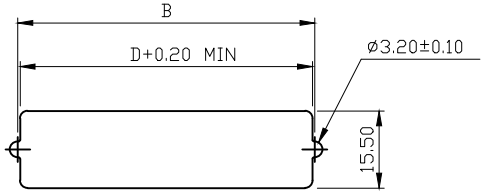

RECOMMEND REAR MOUNT PANEL

53.70	51.50	58.80	36.72	59.74	67.80	5F40360M
F ±0.25	E ±0.25	D ±0.25	C ±0.13	B ±0.13	A ±0.25	

RoHS compliant

Scale	1:1
TOLERANCE	
X.	±0.38
X.X	±0.25
X.XX	±0.13
Angle	
X.°	±3°
X.X°	±1°

Id.	Modification	Date	Name
④	Update	29.05.2014	Joanna
③	Update	13.12.2010	Alex
②	Update	30.06.2009	Dean
①	Drawn	17.05.2006	Hellwig

	Date	Name
Drawn	17.05.2006	Hellwig
Approved	29.05.2014	Joanna

Customer-No.

ASSMANN WSW-No. A-57/xx FFR-N A-57/xx MFR-N

Drawing-No. ASS 0126 CO rev04

Replace Sheet