molex
one company > a world of innovation

This document was generated on 06/07/2010

PLEASE CHECK WWW.MOLEX.COM FOR LATEST PART INFORMATION

Part Number: 0010844022
Status: Active
Description: 6.35mm (.250) Pitch MLX Power Connector Receptacle, 2.13mm (.084") Contact Diameter, Vertical, PA Polyamide (Nylon) 6/6, Tin (Sn), White, 2 Circuits

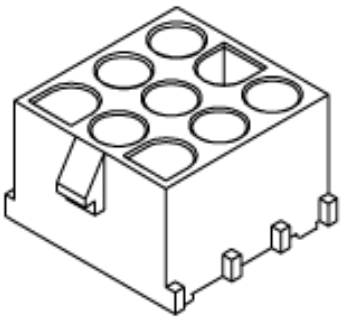

Series image - Reference only

Documents:

3D Model
Drawing (PDF)
Product Specification PSX-42002-0001 (PDF)
Product Specification PSX-42002-0002 (PDF)
RoHS Certificate of Compliance (PDF)

Agency Certification

CSA	LR19980
UL	E29179

General

Product Family	PCB Receptacles
Series	42002
Application	Wire-to-Board
Comments	High Vibration Application
Product Name	MLX™

Physical

Circuits (Loaded)	2
Color - Resin	Natural
Durability (mating cycles max)	50
Flammability	94V-2
Glow-Wire Compliant	No
Lock to Mating Part	Yes
Material - Metal	Phosphor Bronze
Material - Plating Mating	Tin
Material - Plating Termination	Tin
Material - Resin	Nylon
Number of Rows	1
Orientation	Vertical
PC Tail Length (in)	0.169 In
PC Tail Length (mm)	4.30 mm
PCB Retention	None
PCB Thickness Recommended (in)	0.062 In
PCB Thickness Recommended (mm)	1.60 mm
Packaging Type	Bag
Pitch - Mating Interface (in)	0.250 In
Pitch - Mating Interface (mm)	6.35 mm
Polarized to PCB	Yes
Surface Mount Compatible (SMC)	No
Temperature Range - Operating	-55°C to +105°C
Termination Interface: Style	Through Hole

Electrical

Current - Maximum per Contact	13.5A
Voltage - Maximum	600V

Solder Process Data

Duration at Max. Process Temperature (seconds)	10
Lead-free Process Capability	Wave Capable (TH only)
Process Temperature max. C	260

Material Info

EU RoHS
ELV and RoHS Compliant
REACH SVHC
Not Reviewed
Halogen-Free Status
Halogen-Free

China RoHS

Need more information on product environmental compliance?

Email productcompliance@molex.com
For a multiple part number RoHS Certificate of Compliance, click here

Please visit the Contact Us section for any non-product compliance questions.

Search Parts in this Series
42002Series

Mates With
42021 , 42023

Old Part Number	A-42002-2A2A1

Reference - Drawing Numbers

Packaging Specification	PK-43255-001
Product Specification	PSX-42002-0001, PSX-42002-0002
Sales Drawing	SDA-42002-*****

This document was generated on 06/07/2010

PLEASE CHECK WWW.MOLEX.COM FOR LATEST PART INFORMATION

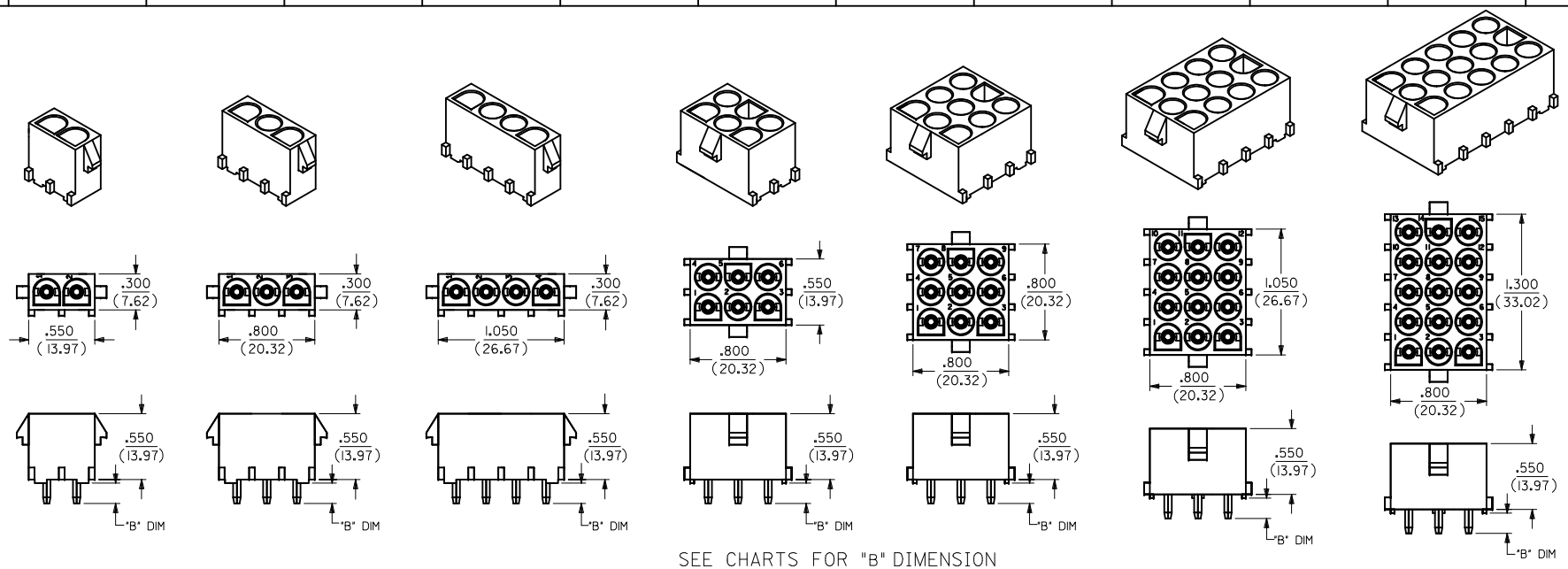

SEE CHARTS FOR "B" DIMENSION

P.C. BOARD MOUNTING DIMENSIONS

2, 3, & 4 POSITION HEADER ASSEMBLIES

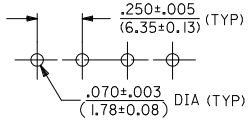

6, 9, 12 & 15 POSITION HEADER ASSEMBLIES

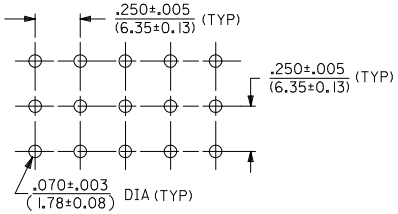

NOTES:

1) MATERIAL CODES:
   "A"= NYLON 6/6, 94V-2, NATURAL
   "C"= PLOYESTER, 94V-0, WHITE/NATURAL
   "D"= NYLON V-2
   COLOUR:BLACK(ZYTEL 101F)
   "E"= NYLON V-2
   COLOUR:NATURAL
   GLOWWIRE COMPATIBLE WITH CTI OF 325V
2) PLATING CODES:
   A = ES-88-P921
3) TERMINAL LENGTH CODES:
   1= TERMINAL FOR .062/(1.57) THICK PC BOARD
4) DIMENSIONS ARE FOR REFERENCE ONLY UNLESS INDICATED OTHERWISE.
5) HEADER ASSEMBLY HOUSINGS MATE WITH : PLUG HOUSINGS, .084/(2.13) DIA. SERIES: (42021-**)
6) CONTACTS ARE ON .250/(6.35) GRID CENTERLINE SPACING.

LEGEND:

A-42002-* * * * *

- BASE NUMBER
- CIRCUIT SIZE
- MATERIAL CODE (SEE NOTE 1)
- PIN (1) OR SOCKET (2) TERMINALS
- TERMINAL PLATING CODE (SEE NOTE 2)
- TERMINAL LENGTH CODE (SEE NOTE 3)

ENTER DESCRIPTION
EC NO: 12010-0067
DRWN:SNS01 2009/11/02
CHKD:GJLOWE 2010/01/27
APPR:KPRASAD 2010/01/27
DESCRIPTION
REV D1

QUALITY SYMBOLS
E=0
E=0
E=0

GENERAL TOLERANCES (UNLESS SPECIFIED)

	mm	INCH
4 PLACES	± ---	± ---
3 PLACES	± ---	± .005
2 PLACES	± 0.13	± .010
1 PLACE	± 0.25	± ---
ANGULAR ±---°		

DRAFT WHERE APPLICABLE MUST REMAIN WITHIN DIMENSIONS

DIMENSION STYLE: IN/MM
SCALE: NTS
DESIGN UNITS: INCH
THIRD ANGLE PROJECTION

DRAWN BY	SSUDHIR
DATE	2004/06/08
CHECKED BY	GJLOWE
DATE	2004/06/08
APPROVED BY	GJLOWE
DATE	2004/06/08

TITLE: HEADER HOUSING ASSEMBLY .084/(2.13)DIA.SERIES

MOLEX INCORPORATED

MATERIAL NO.: SEE CHART
DOCUMENT NO.: SDA-42002-*****
SHEET NO.: 1 OF 2
SIZE: A2

THIS DRAWING CONTAINS INFORMATION THAT IS PROPRIETARY TO MOLEX INCORPORATED AND SHOULD NOT BE USED WITHOUT WRITTEN PERMISSION

PART NO.	ENG. NO.	CIRCUIT SIZE	MATERIAL (SEE NOTE 1)	INSULATOR PART NO.	PLATING (SEE NOTE 2)	TERMINAL PART NO.	"B" DIM ±.015
10-84-4020	A-42002-2A1A1	2	A	42002-2A	A	42005-P921A	.17/(4.3)
10-84-5020	A-42002-2C1A1		C	42002-2C	A	42005-P921A	
10-84-4022	A-42002-2A2A1		A	42002-2A	A	42006-P921A	
10-84-5021	A-42002-2C2A1		C	42002-2C	A	42006-P921A	
367590101	36759-0101		D	366480042	A	42005-P921A	
367590141	36759-0141		D	366480042	A	42006-P921A	
367570101	36757-0101		E	367570001	A	42005-P921A	
367570141	36757-0141		E	367570001	A	42006-P921A	
10-84-4030	A-42002-3A1A1	3	A	42002-3A	A	42005-P921A	.17/(4.3)
10-84-5030	A-42002-3C1A1		C	42002-3C	A	42005-P921A	
10-84-4032	A-42002-3A2A1		A	42002-3A	A	42006-P921A	
10-84-5031	A-42002-3C2A1		C	42002-3C	A	42006-P921A	
367590102	36759-0102		D	366480043	A	42005-P921A	
367590142	36759-0142		D	366480043	A	42006-P921A	
367570102	36757-0102		E	367570002	A	42005-P921A	
367570142	36757-0142		E	367570002	A	42006-P921A	
10-84-4040	A-42002-4A1A1	4	A	42002-4A	A	42005-P921A	.17/(4.3)
10-84-5040	A-42002-4C1A1		C	42002-4C	A	42005-P921A	
10-84-4042	A-42002-4A2A1		A	42002-4A	A	42006-P921A	
10-84-5041	A-42002-4C2A1		C	42002-4C	A	42006-P921A	
367590103	36759-0103		D	366480044	A	42005-P921A	
367590143	36759-0143		D	366480044	A	42006-P921A	
367570103	36757-0103		E	367570003	A	42005-P921A	
367570143	36757-0143		E	367570003	A	42006-P921A	
10-84-4060	A-42002-6A1A1	6	A	42002-6A	A	42005-P921A	.17/(4.3)
10-84-5060	A-42002-6C1A1		C	42002-6C	A	42005-P921A	
10-84-4062	A-42002-6A2A1		A	42002-6A	A	42006-P921A	
10-84-5061	A-42002-6C2A1		C	42002-6C	A	42006-P921A	
367590104	36759-0104		D	366480045	A	42005-P921A	
367590144	36759-0144		D	366480045	A	42006-P921A	
367570104	36757-0104		E	367570004	A	42005-P921A	
367570144	36757-0144		E	367570004	A	42006-P921A	
10-84-4090	A-42002-9A1A1	9	A	42002-9A	A	42005-P921A	.17/(4.3)
10-84-5090	A-42002-9C1A1		C	42002-9C	A	42005-P921A	
10-84-4092	A-42002-9A2A1		A	42002-9A	A	42006-P921A	
10-84-5091	A-42002-9C2A1		C	42002-9C	A	42006-P921A	
367590105	36759-0105		D	366480046	A	42005-P921A	
367590145	36759-0145		D	366480046	A	42006-P921A	
367570105	36757-0105		E	367570005	A	42005-P921A	
367570145	36757-0145		E	367570005	A	42006-P921A	
10-84-4120	A-42002-12A1A1	12	A	42002-12A	A	42005-P921A	.17/(4.3)
10-84-5120	A-42002-12C1A1		C	42002-12C	A	42005-P921A	
10-84-4122	A-42002-12A2A1		A	42002-12A	A	42006-P921A	
10-84-5121	A-42002-12C2A1		C	42002-12C	A	42006-P921A	
367590106	36759-0106		D	366480047	A	42005-P921A	
367590146	36759-0146		D	366480047	A	42006-P921A	
367570106	36757-0106		E	367570006	A	42005-P921A	
367570146	36757-0146		E	367570006	A	42006-P921A	
10-84-4150	A-42002-15A1A1	15	A	42002-15A	A	42005-P921A	.17/(4.3)
10-84-5150	A-42002-15C1A1		C	42002-15C	A	42005-P921A	
10-84-4152	A-42002-15A2A1		A	42002-15A	A	42006-P921A	
10-84-5151	A-42002-15C2A1		C	42002-15C	A	42006-P921A	
367590107	36759-0107		D	366480057	A	42005-P921A	
367590147	36759-0147		D	366480057	A	42006-P921A	
367570107	36757-0107		E	367570007	A	42005-P921A	
367570147	36757-0147		E	367570007	A	42006-P921A	

ENTER DESCRIPTION
ECC NO: 120110-0067 2009/11/02
DRWN:SNS01 2010/01/27
CHKD:GJLOWE 2010/01/27
APPR:KPRASAD DESCRIPTION
REV
D1

QUALITY SYMBOLS
=0
=0
=0

GENERAL TOLERANCES (UNLESS SPECIFIED)

	mm	INCH
4 PLACES	±---	±---
3 PLACES	±---	±.005
2 PLACES	±0.13	±.010
1 PLACE	±0.25	±---
ANGULAR ±---°		

DRAFT WHERE APPLICABLE MUST REMAIN WITHIN DIMENSIONS

DIMENSION STYLE: IN/MM
SCALE: NTS
DESIGN UNITS: INCH
THIRD ANGLE PROJECTION

DRAWN BY: SSUDHIR DATE: 2004/06/08
CHECKED BY: GJLOWE DATE: 2004/06/08
APPROVED BY: GJLOWE DATE: 2004/06/08
MATERIAL NO.: SEE CHART
DOCUMENT NO.: SDA-42002-*****
SHEET NO.: 2 OF 2
SIZE: A1

TITLE: HEADER HOUSING ASSEMBLY .084/(2.13)DIA.SERIES

MOLEX INCORPORATED

THIS DRAWING CONTAINS INFORMATION THAT IS PROPRIETARY TO MOLEX INCORPORATED AND SHOULD NOT BE USED WITHOUT WRITTEN PERMISSION