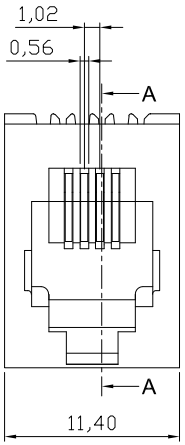

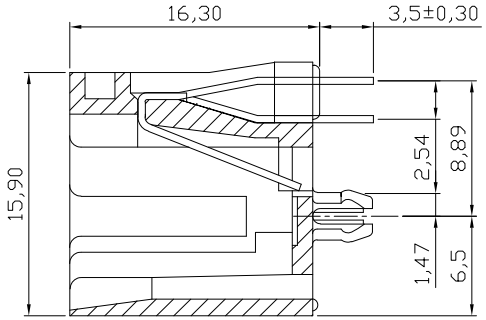

SECTION A-A

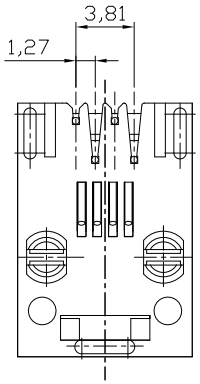

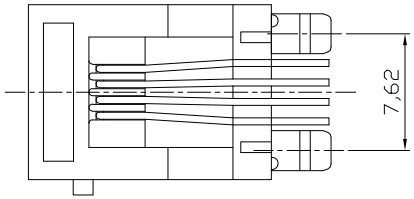

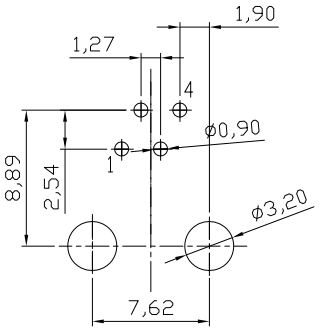

PC Board Layout
Component Side Shown

NOTES:
Mechanical:
1. Housing material : Class Files Polyester UL94V-0 , Color: Black
2. Contact material: Phosphor Bronze ϕ=0.46mm
3. Contact plating: Gold plating over 50u" Nickel
4. Operating Life: 750 Cycles min.
5. PCB Retention Pre-solder: 1 LB min.
6. PCB Retention Post-solder: 10 LBS min.

Electrical:
1. Voltage Rating: 125VAC.
2. Current Rating: 1.5AMP.
3. Contact Resistance: 30mΩ max.
4. Insulation Resistance: 1000MΩ min. @ 500 VDC
5. Dielectric Strength: 750 VAC RMS 50Hz, 1 min.

Environmental:
1. Storage: -40°C To +85°C
2. Operation: -40°C~+85°C
3. Wave Soldering Temp: 200~220°C(5~10S)
Packing: 120pcs/Tray, 3360pcs/Carton

Order code: A-2014-3-X-N-T

Contact plating:
1: 15u" gold
2: 30u" gold
3: 50u" gold
4: 6u" gold

RoHS compliant
Unit:mm

Scale	Free						Date	Name
TOLERANCE						Drawn	27.05.2013	Amy
X.X	±0.20					Approved	27.05.2013	Amy
X.XX	±0.15							
X.XXX	±0.10							
DIM	TOL							
		0	Drawn	27.05.2013	Amy			
Angle	±5°	Id.	Modification	Date	Name			

Customer-No.

ASSMANN WSW-No.
A-2014-3-X-N-T

Drawing-No.
ASS 5709 CO

rev00

Replace

SHEET

ASSMANN WSW components