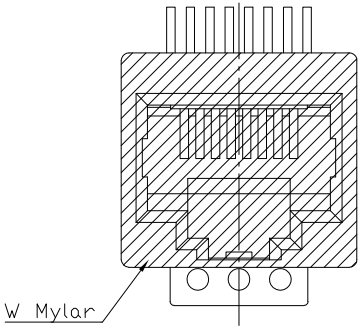

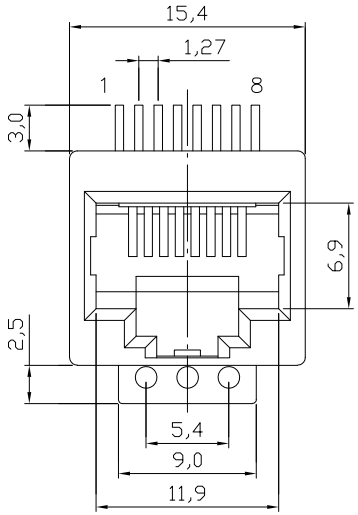

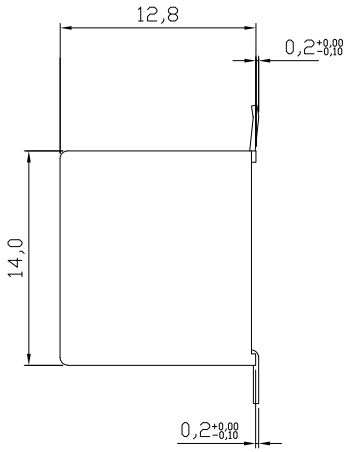

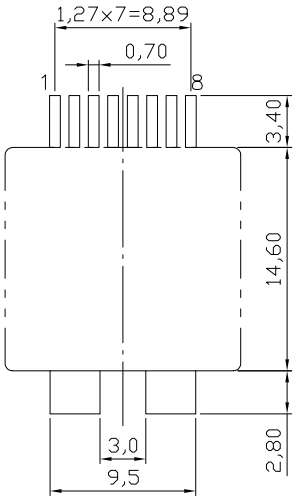

PC Board Layout
Component Side Shown

NOTES:
Mechanical:
1. Housing material : High Temp. UL94V-0 ,
Color: Black
2. Contact material: Phosphor Bronze t=0.35mm
3. Contact plating: Contact area---Selective Gold plating
Tails---Tin plated all over 50u" Nickel
4. Operating Life: 750 Cycles min.
5. PCB Retention Post-solder: 10 LBS min.

Electrical:
1. Voltage Rating: 125VAC.
2. Current Rating: 1.5AMP.
3. Contact Resistance: 30mΩ max.
4. Insulation Resistance: 1000MΩ min. @ 500 VDC
5. Dielectric Strength: 1000 VAC 60Hz, 1 min.

Environmental:
1. Storage: -40°C To +85°C
2. Operation: -40°C~+85°C
3. IR Reflow Soldering Temperature: 255°C~265°C(5-10S)

Packing: 150pcs/Tape reel, 900pcs/Carton

Order code: A-2014-2-X-SMT-N

Contact plating:
1: Selective 15u" gold
2: Selective 30u" gold
3: Selective 50u" gold
4: Selective 6u" gold

RoHS compliant
Unit:mm

Scale	Free
TOLERANCE	
X.X	±0.20
X.XX	±0.15
X.XXX	±0.10
DIM	TOL
Angle	±5°

Id.	Modification	Date	Name
1	Add tape reel packing on page 2	16.04.2014	Amy
0	Drawn	27.05.2013	Amy

	Date	Name
Drawn	27.05.2013	Amy
Approved	16.04.2014	Amy

ASSMANN WSW components

Customer-No.

ASSMANN WSW-No.
A-2014-2-X-SMT-N

Drawing-No.
ASS 5707 CO

rev01

Replace

SHEET
1 / 2

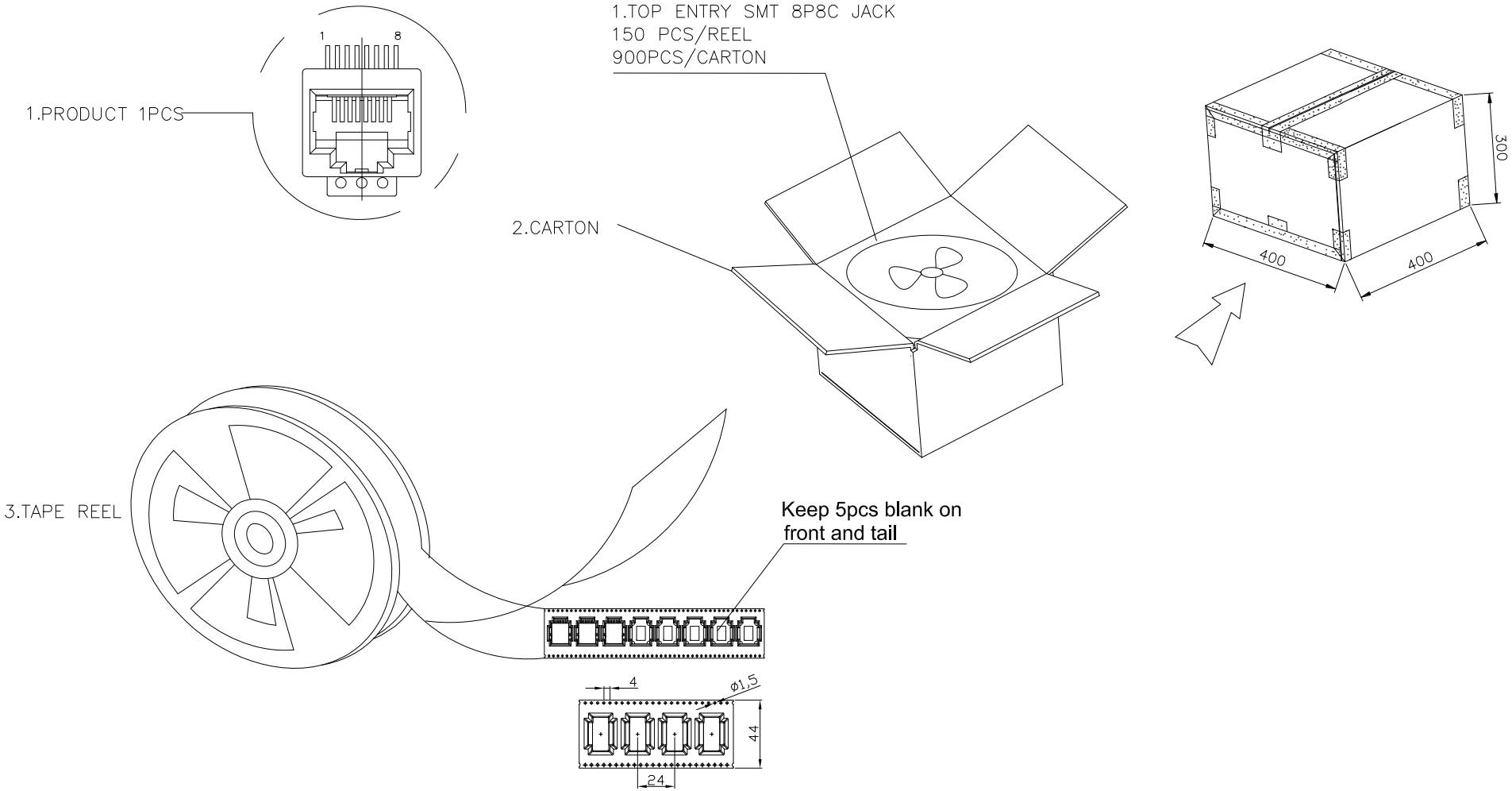

RoHS compliant
Unit:mm

Scale	Free
TOLERANCE	
X.X	±0.20
X.XX	±0.15
X.XXX	±0.10
DIM	TOL
Angle	±5°

Id.	Modification	Date	Name
1	Add tape reel packing on page 2	16.04.2014	Amy
0	Drawn	27.05.2013	Amy

	Date	Name
Drawn	27.05.2013	Amy
Approved	16.04.2014	Amy

ASSMANN WSW components

Customer-No.

ASSMANN WSW-No.
A-2014-2-X-SMT-N

Drawing-No.
ASS 5707 CO

rev01

Replace

SHEET
2 / 2