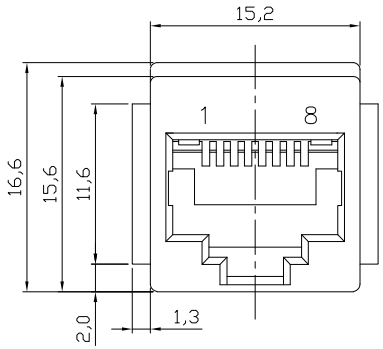

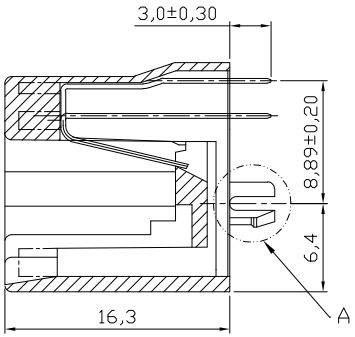

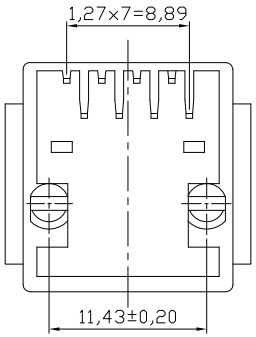

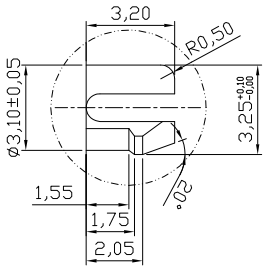

Detail A
2 : 1

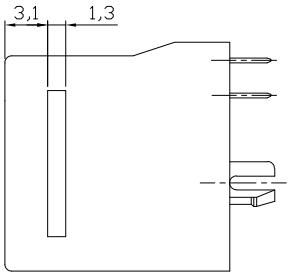

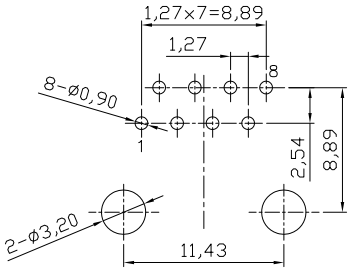

PC Board Layout
Component Side Shown

NOTES:
Mechanical:
1. Housing material : Glass Filled Polyester UL94V-0 ,
Color: Black
2. Contact material: Phosphor Bronze t=0.35mm
3. Contact plating: Contact area---Selective gold plating
Tails---Tin plated all over 50u" Nickel
4. Operating Life: 750 Cycles min.
5. PCB Retention Pre-solder: 1 LB min.
6. PCB Retention Post-solder: 10 LBS min.
Electrical:
1. Voltage Rating: 125VAC.
2. Current Rating: 1.5AMP.
3. Contact Resistance: 30mΩ max.
4. Insulation Resistance: 1000MΩ min. @ 500 VDC
5. Dielectric Strength: 1000 VAC 60Hz, 1 min.
Environmental:
1. Storage: -40°C To +85°C
2. Operation: -40°C~+85°C
3. Wave Soldering Temp: 200~220°C(5~10S)
Packing: 100pcs/Tray, 3200pcs/Carton

Order code: A-2014-2-X
Contact plating:
1: selective 15u" gold
2: selective 30u" gold
3: selective 50u" gold

Frequence	Near-End Cross Talk dB, MIN.	Return Loss dB, MIN.
1.0 MHZ	65.0	23.0
4.0 MHZ	65.0	23.0
8.0 MHZ	62.0	23.0
10.0 MHZ	60.0	23.0
16.0 MHZ	56.0	23.0
20.0 MHZ	54.0	23.0
25.0 MHZ	52.0	14.0
31.25 MHZ	50.0	14.0
62.5 MHZ	44.0	14.0
100.0 MHZ	40.0	14.0

RoHS compliant
Unit:mm

Scale	Free
TOLERANCE	
X.X	±0.20
X.XX	±0.15
X.XXX	±0.10
DIM	TOL
Angle	±5°

Id.	Modification	Date	Name
0	Drawn	27.05.2013	Amy

	Date	Name
Drawn	27.05.2013	Amy
Approved	27.05.2013	Amy

ASSMANN WSW components

Customer-No.

ASSMANN WSW-No. A-2014-2-X

Drawing-No. ASS 5705 CO

rev00

Replace

SHEET