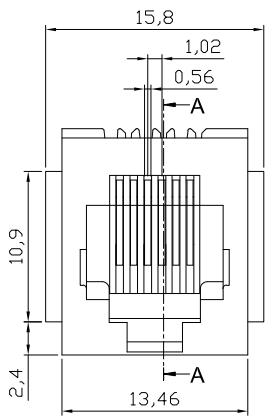

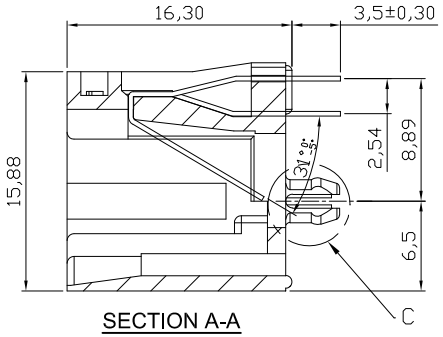

SECTION A-A

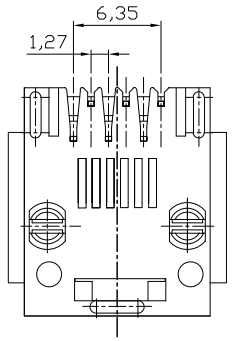

NOTES:
Mechanical:
1. Housing material : Glass Filled Polyester UL94V-0 , Color: Black
2. Contact material: Phosphor Bronze t=0.35mm
3. Contact plating: Contact area---Selective gold plating
   Tails---Tin plating all over 50u" Nickel
4. Operating Life: 750 Cycles min.
5. PCB Retention Pre-solder: 1 LB min.
6. PCB Retention Post-solder: 10 LBS min.
Electrical:
1. Voltage Rating: 125VAC.
2. Current Rating: 1.5AMP.
3. Contact Resistance: 30mΩ max.
4. Insulation Resistance: 1000MΩ min. @ 500 VDC
5. Dielectric Strength: 750 VAC 50Hz, 1 min.
Environmental:
1. Storage: -40°C To +85°C
2. Operation: -40°C~+85°C
3. Wave Soldering Temp: 200~220°C(5~10S)
Packing: 100pcs/Tray, 3200pcs/Carton

Order code: A-2014-1-X
- Contact plating:
  1: selective 15u" gold
  2: selective 30u" gold
  3: selective 50u" gold

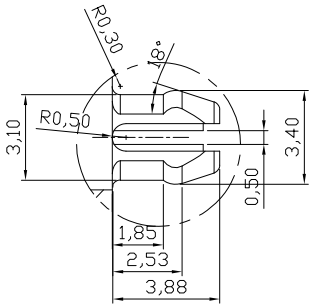

Detail C
2 : 1

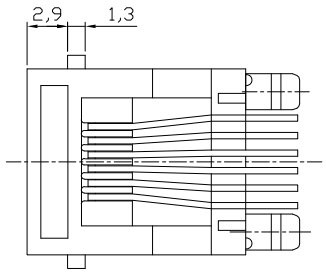

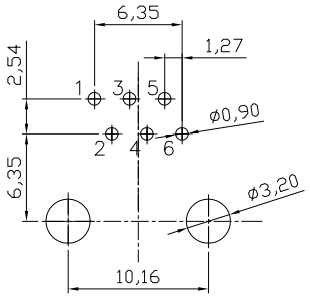

PC Board Layout
Component Side Shown

RoHS compliant
Unit:mm

Scale	Free
TOLERANCE	
X.X	±0.20
X.XX	±0.15
X.XXX	±0.10
DIM	TOL
Angle	±5°

Id.	Modification	Date	Name
0	Drawn	27.05.2013	Amy

	Date	Name
Drawn	27.05.2013	Amy
Approved	27.05.2013	Amy

ASSMANN WSW components

Customer-No.

ASSMANN WSW-No. A-2014-1-X

Drawing-No. ASS 5703 CO

rev00

Replace

SHEET