DC Fan

60×60×10 mm

San Ace 60 9GA type Low Power Consumption Fan



General Specifications

- Material ..... Frame: Plastic (Flammability: UL 94V-0), Impeller: Plastic (Flammability: UL 94V-0)
- Expected life ..... See the table below. (L10 life: 90% survival rate for continuous operation in free air at 60˚C, rated voltage) Expected life at 40°C is for reference only.
- Motor protection function ..... Locked rotor burnout protection, Reverse polarity protection For details, please refer to p. 573.
- Dielectric strength ..... 50/60 Hz, 500 VAC, for 1 minute (between lead wire conductors and frame)
- Insulation resistance ..... 10 MΩ or more with a 500 VDC megger (between lead wire conductors and frame)
- Sound pressure level (SPL) ..... At 1 m away from the air inlet
- Storage temperature ..... -30 to +70˚C (Non-condensing)
- Lead wire ..... ⊕Red ⊖Black Sensor Yellow
- Mass ..... 35 g

Specifications

The models listed below **have ribs and pulse sensors.**

Model no.	Rated voltage [V]	Operating voltage range [V]	Rated current [A]	Rated input [W]	Rated speed [min⁻¹]	Max. airflow [m³/min]	Max. airflow [CFM]	Max. static pressure [Pa]	Max. static pressure [inchH₂O]	SPL [dB (A)]	Operating temperature [˚C]	Expected life [h]
9GA0612G9001	12	7.0 to 13.2	0.27	3.24	6200	0.62	21.9	66	0.26	43	-20 to +60	40000/60˚C (70000/40˚C)
9GA0612H9001		7.0 to 13.8	0.14	1.68	5000	0.5	17.6	42.9	0.17	37	-20 to +70	
9GA0612L9001			0.03	0.36	2300	0.23	8.1	9.1	0.037	17	-10 to +70	

The following sensor and control options are available for selection.

Available for all models. Without sensor Lock sensor

Differs according to the model. Refer to the table on p. 603. PWM control

The » mark indicates Short Lead Time Service applicable models. See p. 626 for details.

Airflow - Static Pressure Characteristics

9GA0612G9001 With pulse sensor

Operating voltage range

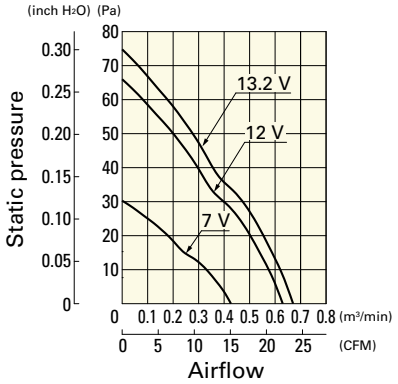

9GA0612H9001 With pulse sensor

Operating voltage range

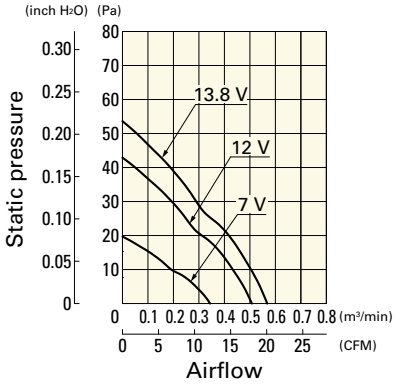

9GA0612L9001 With pulse sensor

Operating voltage range

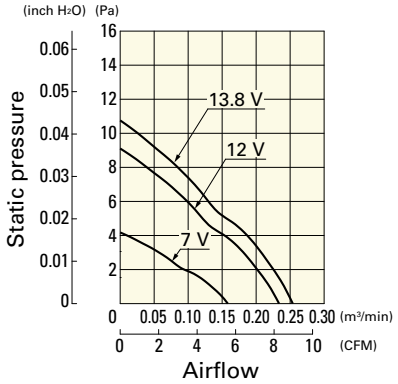

Dimensions (unit: mm)

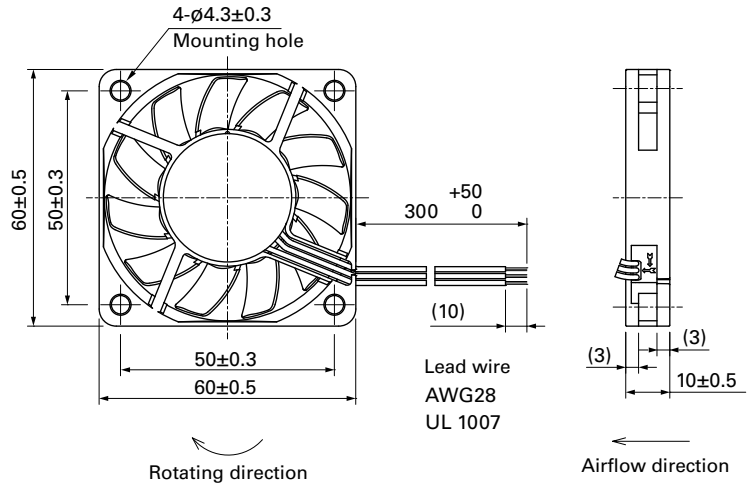

Reference Dimensions of Mounting Holes and Vent Opening (unit: mm)

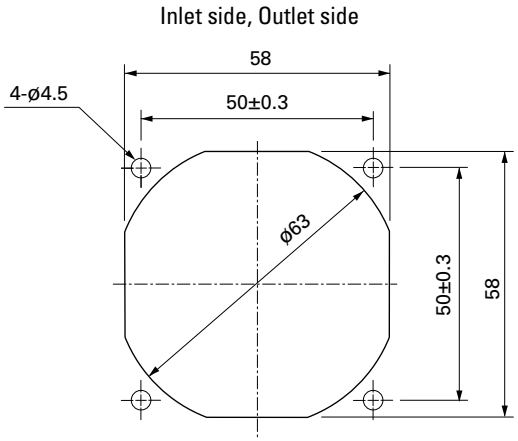

Options

Finger guards page: p. 558

Model no.: 109-139E, 109-139H

Resin filter kits page: p. 566

Model no.: 109-1003F13 (13PPI), 109-1003F20 (20PPI),
109-1003F30 (30PPI), 109-1003F40 (40PPI)

Resin finger guards page: p. 565

Model no.: 109-1003G