THIS DRAWING IS UNPUBLISHED. RELEASED FOR PUBLICATION 20
© COPYRIGHT 20 BY TYCO ELECTRONICS CORPORATION. ALL RIGHTS RESERVED.

SET UP GAUGE	LOC	DIST
2119599-1	A	66

REVISIONS

P	LTR	DESCRIPTION	DATE	DWN	APVD
	1	DEVELOPMENT	13NOV2013	KH	UG
	A	RELEASED	13DEC2013	YY	UG

ATLANTIC VERSION TERMINATOR INTERFACE ADAPTER	PART NUMBER	REVISION	DESCRIPTION	FEED TYPE
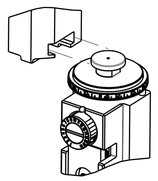	2151413-1	A	FINE CRIMP HEIGHT ADJUST	MECHANICAL
	2151413-2	A	FINE CRIMP HEIGHT ADJUST	PNEUMATIC
	2151413-5	A	FINE CRIMP HEIGHT ADJUST	SERVO LATCH PLATE 4
	2151413-6	A	NON-CRIMP HEIGHT ADJUST	SERVO LATCH PLATE 4 12
	2151413-7	A	FINE CRIMP HEIGHT ADJUST	NONE
	7-2151413-7	A	CRIMP TOOLING KIT	-

APPLICATOR STYLE CONVERSION CHART

CONVERT TO	PART NUMBERS REQUIRED					
PNEUMATIC FEED	2119950-1	1338685-1	5-18022-5	2119641-1	2119799-1	2063440-1
SERVO LATCH PLATE	2119951-1	-	8-2151413-5	1901094-3	-	2168400-6 (QUANTITY 2)
SMART APPLICATOR	2161326-1	-	8-2151413-4	-	-	-
MECHANICAL FEED	2119949-1	1338685-1	5-18022-5	2119653-1	-	-
SERVO LATCH PLATE	2119951-1	-	8-2151413-5	1901094-3	-	2168400-6 (QUANTITY 2)
SMART APPLICATOR	2161326-1	-	8-2151413-4	-	-	-
MECHANICAL FEED	2119949-1	1338685-1	5-18022-5	2119653-1	-	-
PNEUMATIC FEED	2119950-1	1338685-1	5-18022-5	2119641-1	2119799-1	2063440-1
-	-	-	-	-	-	-
-	-	-	-	-	-	-
-	-	-	-	-	-	-
-	-	-	-	-	-	-

APPLICATOR DATA		
CRIMP	SIZE	TYPE
WIRE	2.54 mm [.100]	F
INSUL	4.19 mm [.165]	O
APPLICATOR INSTRUCTIONS 408-10389		

TERMINAL DATA: BOSCH TERMINAL — BOSCH CRIMP SPECIFICATION

TERMINAL NAME: BOSCH DAMPING CONTACT 2.8

WIRE STRIP LENGTH	INSULATION DIAMETER RANGE
4.70-5.08 mm [.185-.200 IN]	∅ 3.40 mm [.134 IN] MAX

TERMINAL APPLICATION SPECIFICATION	NONE	-	-
	-	-	-

TERMINALS APPLIED

TE TERMINAL	BOSCH TERMINAL	TE SEAL	BOSCH SEAL
1572888-1	1 928 498 055	2113409-1	1 928 300 600
1572888-2	1 928 498 057		
1572888-3	1 928 498 059		
1572888-4	1 928 498 063		
1572888-5	1 928 498 061		

WIRE SIZE	CRIMP HEIGHT mm [INCH]	CRIMP HEIGHT REFERENCE SETTING 9
2.50mm2	1.80+/-0.05 [.071+/-.002]	4
2.00mm2	1.70+/-0.05 [.067+/-.002]	5.4
1.50mm2	1.57+/-0.05 [.062+/-.002]	6.7

1. RECOMMENDED SPARE PARTS

2. GREASE BEARING SURFACES LIGHTLY

3. LUBRICATE DAILY PER THE APPLICATOR INSTRUCTION SHEET SUPPLIED WITH THE APPLICATOR.

4. APPLICATOR SPECIFIC DATA TO BE ENTERED INTO BLANK MEMORY CHIP AT ASSEMBLY. SEE BELOW FOR PART NUMBER:
   MECHANICAL FEED WITH "SMART APPLICATOR" CONVERSION: 8-2151413-4
   PNEUMATIC FEED WITH "SMART APPLICATOR" CONVERSION: 8-2151413-4
   SERVO FEED WITH "FINE CRIMP HEIGHT ADJUST": 8-2151413-5
   SERVO FEED WITH "NON-CRIMP HEIGHT ADJUST": 8-2151413-6

5. ADJUSTMENT OF THE STRIPPER MAY BE REQUIRED WHEN MOVING THE APPLICATOR BETWEEN BENCH AND LEADMAKER APPLICATIONS.

6. APPLY PART NUMBER 1-23419-5 LOCTITE TO THREADS OF ITEMS 62 & 242. FOR -6 ONLY APPLY PART NUMBER 1-23419-5 LOCTITE TO THREADS OF ITEMS 37 & 242.

7. GREASE THREADS, GROOVE AND O-RING ON ITEMS 35 & 252.

8. MAGNET, ITEM 166 MUST BE ORIENTED CORRECTLY IN ORDER TO PROPERLY ACTUATE THE COUNTER.

9. CRIMP HEIGHT REFERENCE SETTING WAS THE SETTING USED WHEN THE APPLICATOR WAS QUALIFIED AT THE FACTORY. ADJUSTMENT MAY BE NECESSARY WHEN RUNNING APPLICATOR IN THE FIELD.

10. SPARE FEED CAM STORAGE LOCATION REFER TO INSTRUCTION SHEET FOR ADDITIONAL INFORMATION.

11. TO CONVERT THE APPLICATOR TO A NON-CARRIER CUTTING STYLE, REMOVE ITEM 13 AND ATTACH TO THE LOCATION ON THE BACK SIDE OF THE HOUSING. REFER TO INSTRUCTION SHEET FOR ADDITIONAL INFORMATION.

12. WHEN ASSEMBLING A NON CRIMP HEIGHT ADJUST APPLICATOR (-6) USE SHIMS FROM ITEM 260 TO ACHIEVE A NOMINAL SHIM HEIGHT OF 4.00.

13. THIS APPLICATOR APPLIES TERMINAL WITH A SEAL. INSULATION RANGE QUOTED IS THAT OF THE TERMINAL. THE SEAL INSULATION RANGE IS Ø2.20- 3.00mm [.087-.118 IN.]

14. APPLY TORQ-SEAL IN ALLEN SOCKET TO FILL HOLE AFTER FLAT HD HAS BEEN ADJUSTED TO CORRECT HEIGHT AT QUALIFICATION. APPLY #1-23419-5 LOC-TITE TO THREADS.

*WARNING
ON INSTALLATION, SET WIRE DISC, ITEM 40 TO LARGEST WIRE SIZE SETTING. USE OF SETTINGS BELOW MINIMUM REQUIRED CRIMP HEIGHT SETTING WILL CAUSE DAMAGE TO CRIMP TOOLING.

-77	-7	-6	-5	-2	-1	PART NO	DESCRIPTION	ITEM NO
-	-	-	-	-	-	-	-	7
-	-	-	-	-	-	-	-	6
-	-	-	-	-	-	2119805-1	SHEAR HOLDER, FRONT	10
-	-	-	-	-	-	318707-1	FLOATING SHEAR, FRONT	9
-	-	-	-	-	-	1-1633922-7	ANVIL, COMBINATION	8
-	-	-	-	-	-	2119806-1	INSERT, SHEAR	13
-	-	-	-	-	-	3-22280-3	SPRING, COMPRESSION	12
-	-	-	-	-	-	1-356885-4	STOP, SHEAR	11
-	-	-	-	-	-	2119533-1	STRIPPER, SIDE FEED	19
-	-	-	-	-	-	1-18028-2	WASHER, FLAT, REG M4	20
-	-	-	-	-	-	2168083-2	SCR, SKT HD CAP, RoHS, M4 X 8.0	21
-	-	-	-	-	-	1320928-2	STRIP GUIDE	24
-	-	-	-	-	-	455888-3	SPACER, CRIMPER	28
-	-	-	-	-	-	2119959-2	ASSEMBLY, STRIP GUIDE	29
-	-	-	-	-	-	1-1320908-2	SPACER, STRIP GUIDE	30
-	-	-	-	-	-	2161328-1	HEX HEAD, FLANGED, M5 x 8mm LONG	32
-	-	-	-	-	-	2079383-5	SCR, BHSC, RoHS (M4 X 20)	33
-	-	-	-	-	-	1-1752356-7	SUPPORT, TERMINAL	34
-	-	-	-	-	-	2119092-1	BOLT, ADJUSTMENT	35
-	-	-	-	-	-	2119085-1	FA HEAD, ATLANTIC STYLE	37
-	-	-	-	-	-	2119057-1	APPLICATOR SHIM PACK	39
-	-	-	-	-	-	2119645-1	DISC, NUMBERED FA WIRE ADJUSTMENT	40
-	-	-	-	-	-	2079383-7	SCR, BHSC, RoHS (M8 X 25)	41
-	-	-	-	-	-	2119370-1	RAM, AMP STYLE, SIDE FEED	44
-	-	-	-	-	-	2119656-9	APPLICATOR BASIC ASSEMBLY, SF	46
-	-	-	-	-	-	2119653-1	FEED CAM, POST FEED	47
-	-	-	-	-	-	2119652-1	FEED CAM, PRE FEED	48
-	-	-	-	-	-	18023-9	SCR, SKT HD CAP M4 X 6.0	49
-	-	-	-	-	-	690753-2	SPACER, TONKER	50
-	-	-	-	-	-	811242-5	BUMPER, HOLD DOWN	51
-	-	-	-	-	-	5018030-1	NUT, HEX, REG, RoHS, M3	52
-	-	-	-	-	-	1-2168083-0	SCR, SKT HD CAP, RoHS, M4 X 10	53
-	-	-	-	-	-	2168400-1	SHCS, LOW HEAD, RoHS, M4 X 12	54
-	-	-	-	-	-	1338685-1	PAWL, FEED	56
-	-	-	-	-	-	985575-3	SCR, FLT SKT HD CAP M3 X 10.0	57
-	-	-	-	-	-	5-18022-5	SCR, HEX HD CAP, M4 X 6.0	59
-	-	-	-	-	-	2079383-4	SCR, BHSC, RoHS (M4 X 8)	60
-	-	-	-	-	-	992763-5	SCR, SET, SOC, CONE POINT, M3 x 4.0	62
-	-	-	-	-	-	2119740-1	TAG,IDENTIFICATION	67
-	-	-	-	-	-	2119944-1	FEED FINGER ASSEMBLY,SF	117
-	-	-	-	-	-	1-18028-2	WASHER, FLAT, REG M4	119
-	-	-	-	-	-	1633743-1	SERVO FEED LATCH ASM	133
-	-	-	-	-	-	SEE NOTE 4	MEMORY CHIP, PROGRAMMED	135
-	-	-	-	-	-	2119799-1	HOLDER,FEED FINGER, AF	136
-	-	-	-	-	-	3-23627-7	PIN, RETAIN, GRVD, 3/16 X .854	137
-	-	-	-	-	-	240638-1	SPRING, FEED FINGER	163
-	-	-	-	-	-	994970-2	COUNTER, MAGNETIC	164
-	-	-	-	-	-	994969-1	MAGNET, RARE EARTH HIGH ENERGY	166
-	-	-	-	-	-	21045-3	RING, RETAIN, EXTERN, 3/16 CRESCENT	172
-	-	-	-	-	-	1901094-3	SPACER, FEEDER	198
-	-	-	-	-	-	2119740-2	TAG,IDENTIFICATION	213
-	-	-	-	-	-	2063440-1	AIR FEED MODULE	238
-	-	-	-	-	-	2119580-1	MECHANICAL FEED ASSEMBLY	239
-	-	-	-	-	-	2168400-6	SHCS, LOW HEAD, RoHS, M5 X 16	240
-	-	-	-	-	-	7-18023-7	SCR, SKT HD CAP M3 X 4.0	241
-	-	-	-	-	-	2119083-1	RETAINER, INSULATION DIAL	242
-	-	-	-	-	-	2079764-1	WASHER, WAVE SPRING, CREST-TO-CREST	243
-	-	-	-	-	-	2119082-7	CAM, SNAIL, INSULATION ADJUSTMENT	244
-	-	-	-	-	-	2119758-1	RAM, AMP STYLE, SIDE FEED, NON-ADJ.	245
-	-	-	-	-	-	1-22279-3	SPRING, COMPRESSION	246
-	-	-	-	-	-	2119798-1	DETENT PIN	247
-	-	-	-	-	-	2119641-1	FEED CAM, AIR FEED	248
-	-	-	-	-	-	2079988-1	BUSHING, LCH5-12, MISUMI	249
-	-	-	-	-	-	2119957-2	APPLICATOR SHIM PACK	260
-	-	-	-	-	-	8-21084-0	O-RING, .676 ID, .070 DIA. MAT.	252
-	-	-	-	-	-	2119640-1	PUSH ROD, AIR FEED	250
-77	-7	-6	-5	-2	-1	PART NO	DESCRIPTION	ITEM NO

ATLANTIC VERSION
Shown on sheets 1 of 4 & 2 of 4
(Pacific version shown on sheets 3 of 4 & 4 of 4)

THIS DRAWING IS A CONTROLLED DOCUMENT FOR TYCO ELECTRONICS CORPORATION IT IS SUBJECT TO CHANGE AND THE CONTROLLING ENGINEERING ORGANIZATION SHOULD BE CONTACTED FOR THE LATEST REVISION.

DIMENSIONS: mm

TOLERANCES UNLESS OTHERWISE SPECIFIED:
0 PLC ±-
1 PLC ±0.5
2 PLC ±0.13
3 PLC ±0.013
4 PLC ±0.0001
ANGLES ±-

MATERIAL -
FINISH -

DWN	K.HUANG	13NOV2013
CHK	L.ZHANG	13NOV2013
APVD	U.GUO	13NOV2013

PRODUCT SPEC -
APPLICATION SPEC -
WEIGHT -

TE Connectivity
Harrisburg, PA 17105-3608

NAME
Ocean Side Feed Applicator
-

SIZE	CAGE CODE	DRAWING NO	RESTRICTED TO
A1	00779	C-2151413	-

Customer Accessible Production Drawing | SCALE 1:2 | SHEET 1 OF 4 | REV A

SHEETS 3 & 4 ARE NOT REQUIRED FOR ATLANTIC VERSION

THIS DRAWING IS UNPUBLISHED. RELEASED FOR PUBLICATION 20
© COPYRIGHT 20 BY TYCO ELECTRONICS CORPORATION. ALL RIGHTS RESERVED.

LOC	DIST
A	66

REVISIONS

P	LTR	DESCRIPTION	DATE	DWN	APVD
	-	SEE SHEET 1	-	-	-

FEED TYPE MECHANICAL

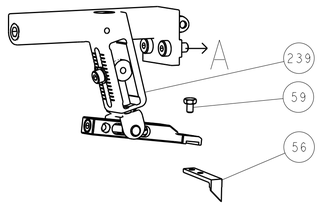

PNEUMATIC

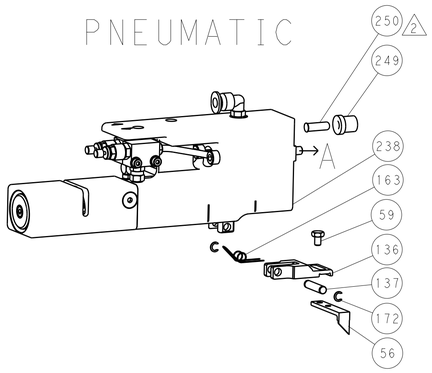

SERVO LATCH PLATE

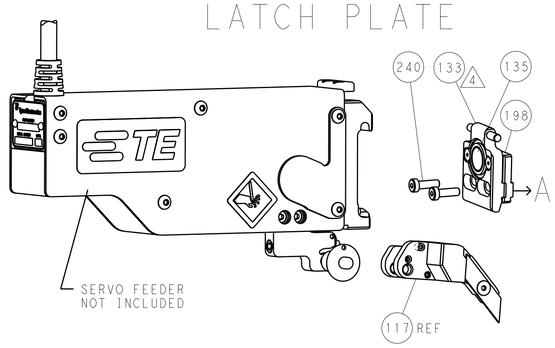

CAM POSITIONS

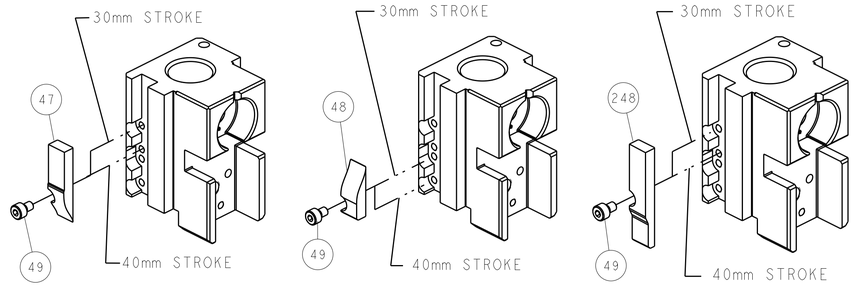



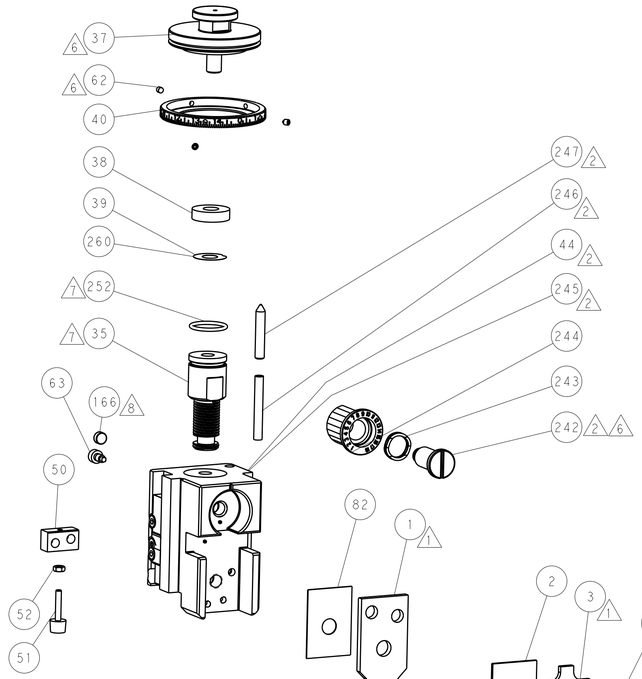

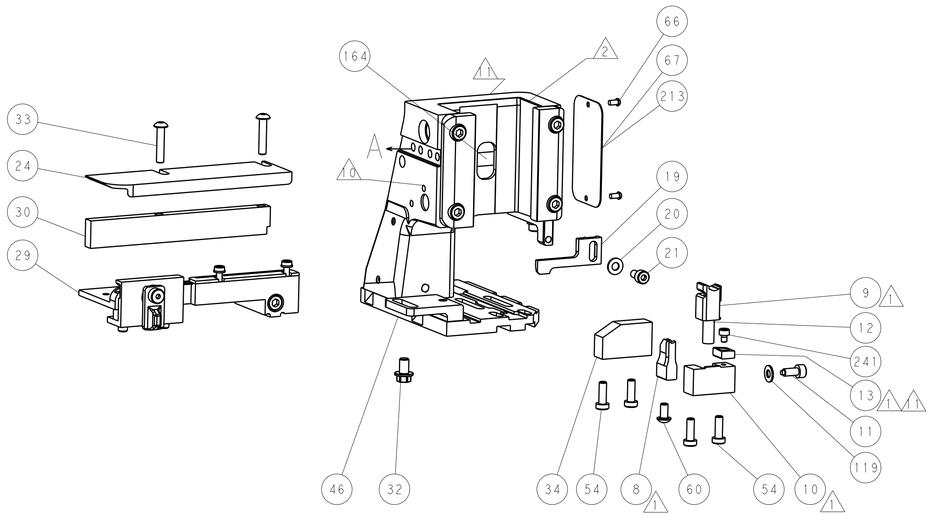

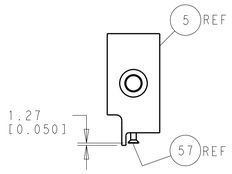

SHEAR DEPRESSOR DETAIL

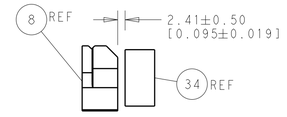

TERMINAL SUPPORT LOCATION

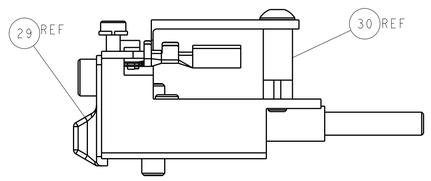

FEED TRACK POSITION
GUIDE BY INSULATION BARREL

ATLANTIC VERSION

Shown on sheets 1 of 4 & 2 of 4
(Pacific version shown on sheets 3 of 4 & 4 of 4)

THIS DRAWING IS A CONTROLLED DOCUMENT FOR TYCO ELECTRONICS CORPORATION IT IS SUBJECT TO CHANGE. CONTACT TYCO ELECTRONICS CORPORATION CHOOSE BE CONTACTED FOR THE LATEST REVISION.

DIMENSIONS: mm

TOLERANCES UNLESS OTHERWISE SPECIFIED:
0 PLC ±-
1 PLC ±0.5
2 PLC ±0.13
3 PLC ±0.013
4 PLC ±0.0001
ANGLES ±-

MATERIAL -
FINISH -

DWN	K.HUANG	13NOV2013
CHK	L.ZHANG	13NOV2013
APVD	U.GUO	13NOV2013
PRODUCT SPEC	-	
APPLICATION SPEC	-	
WEIGHT	-	

TE Connectivity
Harrisburg, PA 17105-3608

NAME: Ocean Side Feed Applicator -

SIZE	CAGE CODE	DRAWING NO	RESTRICTED TO
A1	00779	C-2151413	-

Customer Accessible Production Drawing | SCALE 1:2 | SHEET 2 OF 4 | REV A

SHEETS 3 & 4 ARE NOT REQUIRED FOR ATLANTIC VERSION

THIS DRAWING IS UNPUBLISHED. RELEASED FOR PUBLICATION 20
© COPYRIGHT 20 BY TYCO ELECTRONICS CORPORATION. ALL RIGHTS RESERVED.

SET UP GAUGE 2119599-1 | LOC A | DIST 66

REVISIONS

P	LTR	DESCRIPTION	DATE	DWN	APVD
	-	SEE SHEET 1	-	-	-

PACIFIC VERSION TERMINATOR INTERFACE ADAPTER	PART NUMBER	REVISION	DESCRIPTION	FEED TYPE
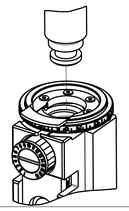	2-2151413-1	A	FINE CRIMP HEIGHT ADJUST	MECHANICAL
	2-2151413-2	A	FINE CRIMP HEIGHT ADJUST	PNEUMATIC
	2-2151413-5	A	FINE CRIMP HEIGHT ADJUST	SERVO LATCH PLATE 4
	2-2151413-7	A	FINE CRIMP HEIGHT ADJUST	NONE
	7-2151413-7	A	CRIMP TOOLING KIT	-

APPLICATOR STYLE CONVERSION CHART

CONVERT TO	PART NUMBERS REQUIRED					
PNEUMATIC FEED	2119950-1	1338685-1	5-18022-5	2119641-2	2119799-1	2063440-1
SERVO LATCH PLATE	2119951-1	-	8-2151413-5	1901094-3	-	2168400-6 (QUANTITY 2)
SMART APPLICATOR	2161326-1	-	8-2151413-4	-	-	-
MECHANICAL FEED	2119949-1	1338685-1	5-18022-5	2119653-2	-	-
SERVO LATCH PLATE	2119951-1	-	8-2151413-5	1901094-3	-	2168400-6 (QUANTITY 2)
SMART APPLICATOR	2161326-1	-	8-2151413-4	-	-	-
MECHANICAL FEED	2119949-1	1338685-1	5-18022-5	2119653-2	-	-
PNEUMATIC FEED	2119950-1	1338685-1	5-18022-5	2119641-2	2119799-1	2063440-1
-	-	-	-	-	-	-
-	-	-	-	-	-	-

APPLICATOR DATA		
CRIMP	SIZE	TYPE
WIRE	2.54 mm [.100]	F
INSUL	4.19 mm [.165]	O
APPLICATOR INSTRUCTIONS 408-10389		

TERMINAL DATA: BOSCH TERMINAL		BOSCH CRIMP SPECIFICATION
TERMINAL NAME: BOSCH DAMPING CONTACT 2.8		
WIRE STRIP LENGTH 4.70-5.08 mm [.185-.200 IN]		INSULATION DIAMETER RANGE ∅ 3.40 mm [.134 IN] MAX
TERMINAL APPLICATION SPECIFICATION	NONE	-
	-	-

TERMINALS APPLIED

TE TERMINAL	BOSCH TERMINAL	TE SEAL	BOSCH SEAL
1572888-1	1 928 498 055	2113409-1	1 928 300 600
1572888-2	1 928 498 057		
1572888-3	1 928 498 059		
1572888-4	1 928 498 063		
1572888-5	1 928 498 061		

WIRE SIZE	CRIMP HEIGHT mm [INCH]	CRIMP HEIGHT REFERENCE SETTING 9
2.50mm2	1.80+/-0.05 [.071+/-.002]	4
2.00mm2	1.70+/-0.05 [.067+/-.002]	5.4
1.50mm2	1.57+/-0.05 [.062+/-.002]	6.7

1. RECOMMENDED SPARE PARTS
2. GREASE BEARING SURFACES LIGHTLY
3. LUBRICATE DAILY PER THE APPLICATOR INSTRUCTION SHEET SUPPLIED WITH THE APPLICATOR.
4. APPLICATOR SPECIFIC DATA TO BE ENTERED INTO BLANK MEMORY CHIP AT ASSEMBLY. SEE BELOW FOR PART NUMBER:
   MECHANICAL FEED WITH "SMART APPLICATOR" CONVERSION: 8-2151413-4
   PNEUMATIC FEED WITH "SMART APPLICATOR" CONVERSION: 8-2151413-4
   SERVO FEED WITH "FINE CRIMP HEIGHT ADJUST": 8-2151413-5
5. ADJUSTMENT OF THE STRIPPER MAY BE REQUIRED WHEN MOVING THE APPLICATOR BETWEEN BENCH AND LEADMAKER APPLICATIONS.
6. APPLY PART NUMBER 1-23419-5 LOCTITE TO THREADS OF ITEMS 62 & 242.
7. GREASE THREADS, GROOVE AND O-RING ON ITEMS 139 & 152.
8. MAGNET MUST BE ORIENTED CORRECTLY IN ORDER TO PROPERLY ACTUATE THE COUNTER.
9. CRIMP HEIGHT REFERENCE SETTING WAS THE SETTING USED WHEN THE APPLICATOR WAS QUALIFIED AT THE FACTORY. ADJUSTMENT MAY BE NECESSARY WHEN RUNNING APPLICATOR IN THE FIELD.
10. SPARE FEED CAM STORAGE LOCATION REFER TO INSTRUCTION SHEET FOR ADDITIONAL INFORMATION.
11. TO CONVERT THE APPLICATOR TO A NON-CARRIER CUTTING STYLE, REMOVE ITEM 13 AND ATTACH TO THE LOCATION ON BACK SIDE OF THE HOUSING. REFER TO INSTRUCTION SHEET FOR ADDITIONAL INFORMATION.
12. THIS APPLICATOR APPLIES TERMINAL WITH A SEAL. INSULATION RANGE QUOTED IS THAT OF THE TERMINAL. THE SEAL INSULATION RANGE IS ∅2.20- 3.00mm [.087-.118 IN.]
13. APPLY TORQ-SEAL IN ALLEN SOCKET TO FILL HOLE AFTER FLAT HD HAS BEEN ADJUSTED TO CORRECT HEIGHT AT QUALIFICATION. APPLY #1-23419-5 LOC-TITE TO THREADS.

*WARNING
ON INSTALLATION, SET WIRE DISC, ITEM 40 TO LARGEST WIRE SIZE SETTING. USE OF SETTINGS BELOW MINIMUM REQUIRED CRIMP HEIGHT SETTING WILL CAUSE DAMAGE TO CRIMP TOOLING.

-	1	1	1	1	2119782-1	FINE ADJUST HEAD ASM, PACIFIC STYLE	251
-77	-27	-25	-22	-21	PART NO	DESCRIPTION	ITEM NO

-	-	-	1	-	2119640-1	PUSH ROD, AIR FEED	250
-	-	-	1	-	2079988-1	BUSHING, LCH5-12, MISUMI	249
-	1	1	1	1	1-22279-3	SPRING, COMPRESSION	246
-	1	1	1	1	2119082-7	CAM, SNAIL, INSULATION ADJUSTMENT	244
-	1	1	1	1	2079764-1	WASHER, WAVE SPRING, CREST-TO-CREST	243
6 -	1	1	1	1	2119083-1	RETAINER, INSULATION DIAL	242
-	1	1	1	1	7-18023-7	SCR, SKT HD CAP M3 X 4.0	241
-	-	2	-	-	2168400-6	SHCS, LOW HEAD, RoHS, M5 X 16	240
-	-	-	-	1	2119580-1	MECHANICAL FEED ASSEMBLY	239
-	-	-	1	-	2063440-1	AIR FEED MODULE	238
-	-	1	-	-	2119740-2	TAG,IDENTIFICATION	213
-	-	1	-	-	1901094-3	SPACER, FEEDER	198
-	-	-	2	-	21045-3	RING, RETAIN, EXTERN, 3/16 CRESCENT	172
-	1	1	1	1	994969-1	MAGNET, RARE EARTH HIGH ENERGY	166
-	REF	REF	REF	REF	994970-2	COUNTER, MAGNETIC	164
-	-	-	1	-	240638-1	SPRING, FEED FINGER	163
-	1	1	1	1	8-21084-1	O-RING, .801 ID, .070 DIA. MAT.	152
-	-	-	1	-	2119641-2	FEED CAM, AIR FEED	151
-	1	1	1	1	2119798-2	DETENT PIN	145
-	1	1	1	1	2079383-8	SCR, BHSC, RoHS (M4 X 16)	144
-	4	4	4	4	2168400-5	SHCS, LOW HEAD, RoHS, M4 X 20	143
-	-	-	-	1	2119653-2	FEED CAM, POST FEED	142
-	1	1	1	1	1-2119656-0	APPLICATOR BASIC ASSEMBLY, SF	141
-	1	1	1	1	2119650-1	RAM, ASIAN STYLE, SIDE FEED	140
-	1	1	1	1	2119092-2	BOLT, ADJUSTMENT	139
-	-	-	1	-	3-23627-7	PIN, RETAIN, GRVD, 3/16 X .854	137
-	-	-	1	-	2119799-1	HOLDER,FEED FINGER, AF	136
-	-	REF	-	-	SEE NOTE 4	MEMORY CHIP, PROGRAMMED	135
-	-	1	-	-	1633743-1	SERVO FEED LATCH ASM	133
-	1	1	1	1	1-18028-2	WASHER, FLAT, REG M4	119
-	-	REF	-	-	2119944-1	FEED FINGER ASSEMBLY,SF	117
-	1	1	1	1	455888-4	SPACER, CRIMPER	82
-	1	1	1	1	2119956-1	DOCUMENTATION PACKAGE	71
-	1	-	1	1	2119740-1	TAG,IDENTIFICATION	67
-	2	2	2	2	2168078-1	SCREW, DRIVE, RH, RoHS, 2 x .188	66
-	1	1	1	1	2119793-1	LIMITER, ADJUSTMENT BOLT	63
6 -	3	3	3	3	992763-5	SCR, SET, SOC, CONE POINT, M3 x 4.0	62
-	-	-	1	1	5-18022-5	SCR, HEX HD CAP, M4 X 6.0	59
-	1	1	1	1	985575-3	SCR, FLT SKT HD CAP M3 X 10.0	57
-	-	-	1	1	1338685-1	PAWL, FEED	56
-	2	2	2	2	1-2168083-0	SCR, SKT HD CAP, RoHS, M4 X 10	53
-	1	1	1	1	5018030-1	NUT, HEX, REG, RoHS, M3	52
-	1	1	1	1	811242-5	BUMPER, HOLD DOWN	51
-	1	1	1	1	690753-2	SPACER, TONKER	50
-	-	-	1	2	18023-9	SCR, SKT HD CAP M4 X 6.0	49
-	-	-	-	1	2119652-1	FEED CAM, PRE FEED	48
-	1	1	1	1	2079383-7	SCR, BHSC, RoHS (M8 X 25)	41
-	1	1	1	1	2119645-1	DISC, NUMBERED FA WIRE ADJUSTMENT	40
-	1	1	1	1	2119957-1	APPLICATOR SHIM PACK	39
-	1	1	1	1	1-2119644-2	RAM WASHER, PRECISION	38
-	1	1	1	1	1-1752356-7	SUPPORT, TERMINAL	34
-	2	2	2	2	2079383-5	SCR, BHSC, RoHS (M4 X 20)	33
-	1	1	1	1	2161328-1	HEX HEAD, FLANGED, M5 x 8mm LONG	32
-	1	1	1	1	1-1320908-2	SPACER, STRIP GUIDE	30
-	1	1	1	1	2119959-2	ASSEMBLY, STRIP GUIDE	29
-	1	1	1	1	455888-3	SPACER, CRIMPER	28
-	1	1	1	1	1320928-2	STRIP GUIDE	24
-	1	1	1	1	2168083-2	SCR, SKT HD CAP, RoHS, M4 X 8.0	21
-	1	1	1	1	1-18028-2	WASHER, FLAT, REG M4	20
-	1	1	1	1	2119533-1	STRIPPER, SIDE FEED	19
1 -	1	1	1	1	2119806-1	INSERT, SHEAR	13
-	1	1	1	1	3-22280-3	SPRING, COMPRESSION	12
-	1	1	1	1	1-356885-4	STOP, SHEAR	11
1 -	1	1	1	1	2119805-1	SHEAR HOLDER, FRONT	10
1 -	1	1	1	1	318707-1	FLOATING SHEAR, FRONT	9
1 1	1	1	1	1	1-1633922-7	ANVIL, COMBINATION	8
-	-	-	-	-	-	-	7
-	-	-	-	-	-	-	6
-	1	1	1	1	2119781-1	DEPRESSOR, SHEAR	5
-	1	1	1	1	238011-4	BLOCK, CRIMPER SPACER	4
1 1	1	1	1	1	5-1633965-0	CRIMPER, INSULATION O PREMIUM	3
-	1	1	1	1	1-455888-1	SPACER, CRIMPER	2
1 1	1	1	1	1	2-456407-6	CRIMPER, WIRE PREMIUM	1
-77	-27	-25	-22	-21	PART NO	DESCRIPTION	ITEM NO

PACIFIC VERSION
Shown on sheets 3 of 4 & 4 of 4
(Atlantic version shown on sheets 1 of 4 & 2 of 4)

THIS DRAWING IS A CONTROLLED DOCUMENT FOR TYCO ELECTRONICS CORPORATION IT IS SUBJECT TO CHANGE AND THE CONTROLLING ENGINEERING ORGANIZATION SHOULD BE CONTACTED FOR THE LATEST REVISION.

DIMENSIONS: mm
TOLERANCES UNLESS OTHERWISE SPECIFIED:
0 PLC ±-
1 PLC ±0.5
2 PLC ±0.13
3 PLC ±0.013
4 PLC ±0.0001
ANGLES ±-
MATERIAL -
FINISH -

DWN K.HUANG 13NOV2013
CHK L.ZHANG 13NOV2013
APVD U.GUO 13NOV2013
PRODUCT SPEC -
APPLICATION SPEC -
WEIGHT -

TE Connectivity
Harrisburg, PA 17105-3608

NAME Ocean Side Feed Applicator
-

SIZE	CAGE CODE	DRAWING NO	RESTRICTED TO
A1	00779	C-2151413	-

Customer Accessible Production Drawing | SCALE 1:2 | SHEET 3 OF 4 | REV A

SHEETS 1 & 2 ARE NOT REQUIRED FOR PACIFIC VERSION

THIS DRAWING IS UNPUBLISHED. RELEASED FOR PUBLICATION 20
© COPYRIGHT 20 BY TYCO ELECTRONICS CORPORATION. ALL RIGHTS RESERVED.

LOC	DIST
A	66

REVISIONS

P	LTR	DESCRIPTION	DATE	DWN	APVD
	-	SEE SHEET 1	-	-	-

FEED TYPE

MECHANICAL

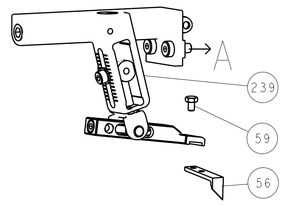

PNEUMATIC

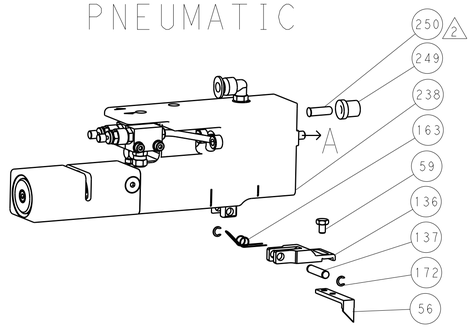

SERVO LATCH PLATE

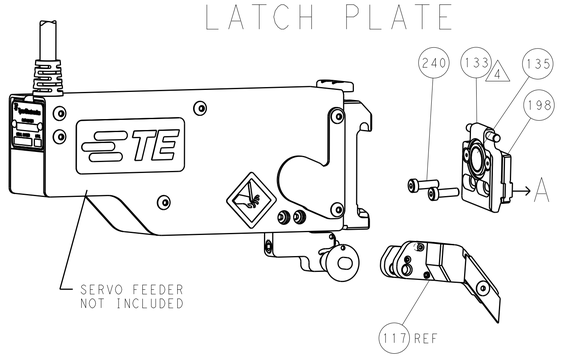

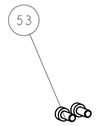

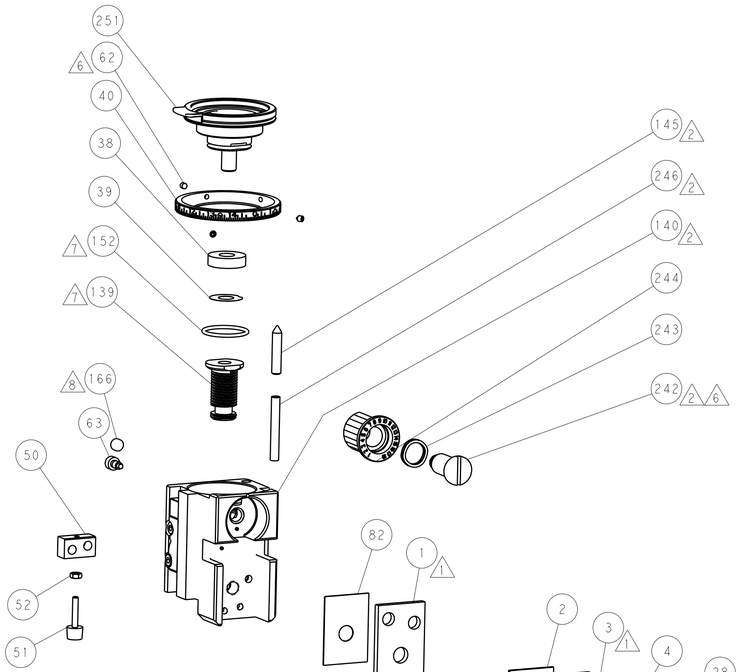

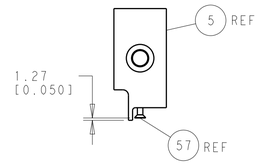

SHEAR DEPRESSOR DETAIL

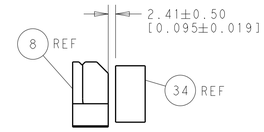

TERMINAL SUPPORT LOCATION

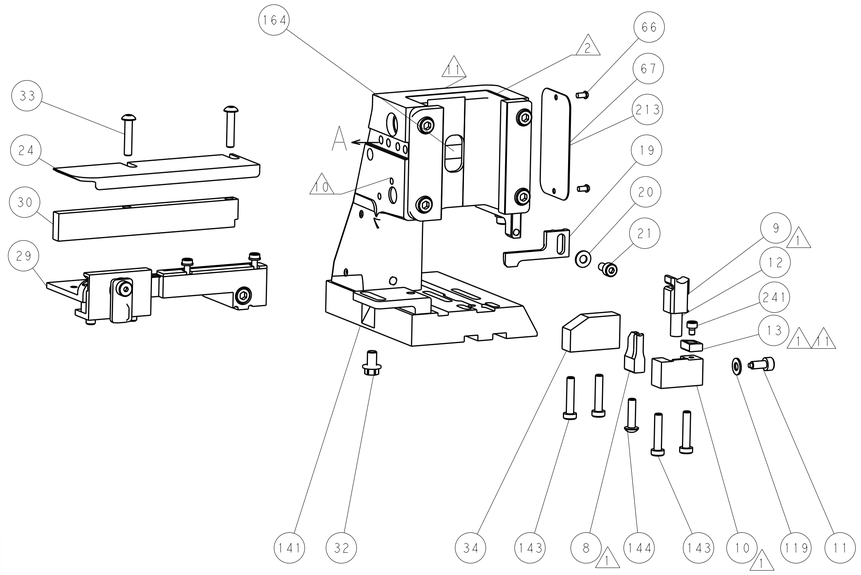

CAM POSITIONS

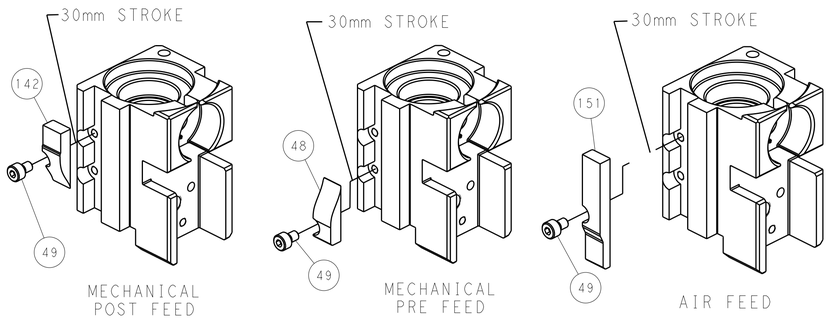

ITEM 30 LOCATED AT FRONT HOLES

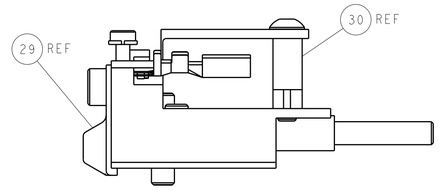

FEED TRACK POSITION
GUIDE BY INSULATION BARREL

PACIFIC VERSION

Shown on sheets 3 of 4 & 4 of 4
(Atlantic version shown on sheets 1 of 4 & 2 of 4)

THIS DRAWING IS A CONTROLLED DOCUMENT OF TYCO ELECTRONICS CORPORATION. IT IS SUBJECT TO CHANGE AND THE CONTROLLING ORGANIZATION SHOULD BE CONTACTED FOR THE LATEST REVISION.

DIMENSIONS: mm

TOLERANCES UNLESS OTHERWISE SPECIFIED:
0 PLC ±-
1 PLC ±0.5
2 PLC ±0.13
3 PLC ±0.013
4 PLC ±0.0001
ANGLES ±-

MATERIAL - -
FINISH - -

DWN	K.HUANG	13NOV2013
CHK	L.ZHANG	13NOV2013
APVD	W.GUO	13NOV2013
PRODUCT SPEC	-	
APPLICATION SPEC	-	
WEIGHT	-	

TE Connectivity
Harrisburg, PA 17105-3608

NAME: Ocean Side Feed Applicator -

SIZE	CAGE CODE	DRAWING NO	RESTRICTED TO
A1	00779	C-2151413	-

Customer Accessible Production Drawing | SCALE 1:2 | SHEET 4 OF 4 | REV A

SHEETS 1 & 2 ARE NOT REQUIRED FOR PACIFIC VERSION