THIS DRAWING IS UNPUBLISHED. RELEASED FOR PUBLICATION 20
© COPYRIGHT 20 BY TYCO ELECTRONICS CORPORATION. ALL RIGHTS RESERVED.

SET UP GAUGE	LOC	DIST
2119599-1	A	66

REVISIONS

P	LTR	DESCRIPTION	DATE	DWN	APVD
	A	RELEASED	06JUN2012	BH	BH
	B	ECR-14-004665	01APR2014	KH	GB
	C	ECR-16-013350	19SEP2016	TB	TE

ATLANTIC VERSION TERMINATOR INTERFACE ADAPTER

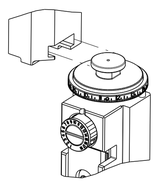

PART NUMBER	REVISION	DESCRIPTION	FEED TYPE
2151610-1	B	FINE CRIMP HEIGHT ADJUST	MECHANICAL
2151610-2	B	FINE CRIMP HEIGHT ADJUST	PNEUMATIC
2151610-5	B	FINE CRIMP HEIGHT ADJUST	SERVO LATCH PLATE 4
2151610-6	B	NON-CRIMP HEIGHT ADJUST	SERVO 4 LATCH PLATE 12
2151610-7	B	FINE CRIMP HEIGHT ADJUST	NONE
7-2151610-7	A	CRIMP TOOLING KIT	-

APPLICATOR STYLE CONVERSION CHART

CONVERT TO	PART NUMBERS REQUIRED					
PNEUMATIC FEED	2119950-1	1338685-1	5-18022-5	2119641-1	2119799-1	2063440-1
SERVO LATCH PLATE	2119951-1	-	8-2151610-5	1901094-3	-	2168400-6 (QUANTITY 2)
SMART APPLICATOR	2161326-1	-	8-2151610-4	-	-	-
MECHANICAL FEED	2119949-1	1338685-1	5-18022-5	2119653-1	-	-
SERVO LATCH PLATE	2119951-1	-	8-2151610-5	1901094-3	-	2168400-6 (QUANTITY 2)
SMART APPLICATOR	2161326-1	-	8-2151610-4	-	-	-
MECHANICAL FEED	2119949-1	1338685-1	5-18022-5	2119653-1	-	-
PNEUMATIC FEED	2119950-1	1338685-1	5-18022-5	2119641-1	2119799-1	2063440-1
-	-	-	-	-	-	-
-	-	-	-	-	-	-
-	-	-	-	-	-	-
-	-	-	-	-	-	-

APPLICATOR DATA

CRIMP	SIZE	TYPE
WIRE	2.59 mm [.102]	F
INSUL	4.73 mm [.186]	F

APPLICATOR INSTRUCTIONS 408-10389

TERMINAL DATA: DELPHI PACKARD TERMINAL — PACKARD CRIMP SPECIFICATIONS

TERMINAL NAME: TAXI TERM GT 280 SEALED

WIRE STRIP LENGTH	13 INSULATION DIAMETER RANGE
5.22-5.98 mm [.206-.235 IN]	∅ 2.20-3.20 mm [.087-.126 IN]
TERMINAL APPLICATION SPECIFICATION — PACKARD Rev -	- -
-	- -

TERMINALS APPLIED

TE TERMINAL	DELPHI PACKARD TERMINAL	TE SEAL	DELPHI PACKARD SEAL
1572758-1	15304732	1572498-1	15366066
1572491-1	15304720		

WIRE SIZE	CRIMP HEIGHT mm [INCH]	CRIMP HEIGHT REFERENCE SETTING 9
3.00mm2	2.10+/-0.05 [.083+/-.002]	4.5
2.00mm2	1.70+/-0.05 [.067+/-.002]	8.9

1 RECOMMENDED SPARE PARTS

2 GREASE BEARING SURFACES LIGHTLY

3. LUBRICATE DAILY PER THE APPLICATOR INSTRUCTION SHEET SUPPLIED WITH THE APPLICATOR.

4 APPLICATOR SPECIFIC DATA TO BE ENTERED INTO BLANK MEMORY CHIP AT ASSEMBLY. SEE BELOW FOR PART NUMBER:
MECHANICAL FEED WITH "SMART APPLICATOR" CONVERSION: 8-2151610-4
PNEUMATIC FEED WITH "SMART APPLICATOR" CONVERSION: 8-2151610-4
SERVO FEED WITH "FINE CRIMP HEIGHT ADJUST": 8-2151610-5
SERVO FEED WITH "NON-CRIMP HEIGHT ADJUST": 8-2151610-6

5. ADJUSTMENT OF THE STRIPPER MAY BE REQUIRED WHEN MOVING THE APPLICATOR BETWEEN BENCH AND LEADMAKER APPLICATIONS.

6 APPLY PART NUMBER 1-23419-5 LOCTITE TO THREADS OF ITEMS 50 & 62
APPLY PART NUMBER 2-23419-6 LOCTITE TO THREADS OF ITEM 242.
FOR -6 ONLY APPLY PART NUMBER 1-23419-5 LOCTITE TO THREADS OF ITEMS 37, 50 & 242.

7 GREASE THREADS, GROOVE AND O-RING ON ITEMS 35 & 252.

8 MAGNET, ITEM 166 MUST BE ORIENTED CORRECTLY IN ORDER TO PROPERLY ACTUATE THE COUNTER.

9 CRIMP HEIGHT REFERENCE SETTING WAS THE SETTING USED WHEN THE APPLICATOR WAS QUALIFIED AT THE FACTORY. ADJUSTMENT MAY BE NECESSARY WHEN RUNNING APPLICATOR IN THE FIELD.

10 SPARE FEED CAM STORAGE LOCATION REFER TO INSTRUCTION SHEET FOR ADDITIONAL INFORMATION.

11 TO CONVERT THE APPLICATOR TO A NON-CARRIER CUTTING STYLE, REMOVE ITEM 13 AND ATTACH TO THE LOCATION ON THE BACK SIDE OF THE HOUSING. REFER TO INSTRUCTION SHEET FOR ADDITIONAL INFORMATION.

12 WHEN ASSEMBLING -6 NON-CRIMP HEIGHT ADJUST APPLICATOR USE SHIM PACK 2119957-2 TO ALIGN APPLICATOR'S MAXIMUM WIRE CRIMP HEIGHT AT NORMAL TERMINATOR SHUT HEIGHT

13 THIS APPLICATOR APPLIES TERMINAL WITH A SEAL.

14 APPLY TORQ-SEAL IN ALLEN SOCKET TO FILL HOLE AFTER FLAT HD HAS BEEN ADJUSTED TO CORRECT HEIGHT AT QUALIFICATION. APPLY #1-23419-5 LOC-TITE TO THREADS.

*WARNING
ON INSTALLATION, SET WIRE DISC, ITEM 40 TO LARGEST WIRE SIZE SETTING. USE OF SETTINGS BELOW MINIMUM REQUIRED CRIMP HEIGHT SETTING WILL CAUSE DAMAGE TO CRIMP TOOLING.

-77	-7	-6	-5	-2	-1	PART NO	DESCRIPTION	ITEM NO
-	-	1	-	-	-	2119957-2	APPLICATOR SHIM PACK	260
-	1	-	1	1	1	8-21084-0	O-RING, .676 ID, .070 DIA. MAT.	252
-	-	-	-	1	-	2119640-1	PUSH ROD, AIR FEED	250
-	-	-	-	1	-	1803259-1	BUSHING, FLANGED	249
-	-	-	-	1	-	2119641-1	FEED CAM, AIR FEED	248
-	1	-	1	1	1	2119798-1	DETENT PIN	247
-	1	-	1	1	1	1-22279-3	SPRING, COMPRESSION	246
-	-	1	-	-	-	2119758-1	RAM, AMP STYLE, SIDE FEED, NON-ADJ.	245
-77	-7	-6	-5	-2	-1	PART NO	DESCRIPTION	ITEM NO

-77	-7	-6	-5	-2	-1	PART NO	DESCRIPTION	ITEM NO
-	1	1	1	1	1	2119082-7	CAM, SNAIL, INSULATION ADJUSTMENT	244
-	1	1	1	1	1	2079764-1	WASHER, WAVE SPRING, CREST-TO-CREST	243
-	1	1	1	1	1	2119083-1	RETAINER, INSULATION DIAL	242
-	1	1	1	1	1	7-18023-7	SCR, SKT HD CAP M3 X 4.0	241
-	-	2	2	-	-	2168400-6	SHCS, LOW HEAD, RoHS, M5 X 16	240
-	-	-	-	-	1	2119580-1	MECHANICAL FEED ASSEMBLY	239
-	-	-	-	1	-	2063440-1	AIR FEED MODULE	238
-	-	1	1	-	-	2119740-2	TAG,IDENTIFICATION	213
-	-	1	1	-	-	1901094-3	SPACER, FEEDER	198
-	1	1	1	1	1	993111-1	PIN, SLOTTED SPRING 3.0 X 20.0	177
-	1	1	1	1	1	8-22280-7	SPRING, COMPRESSION	176
-	1	1	1	1	1	1752353-2	GUIDE PIN,HOLDDOWN	175
-	1	1	1	1	1	1901680-2	GUIDE PIN,HOLDDOWN	174
-	-	-	-	2	-	21045-3	RING, RETAIN, EXTERN, 3/16 CRESCENT	172
-	1	1	1	1	1	994969-1	MAGNET, RARE EARTH HIGH ENERGY	166
-	REF	REF	REF	REF	REF	994970-2	COUNTER, MAGNETIC	164
-	-	-	-	1	-	240638-1	SPRING, FEED FINGER	163
-	-	-	-	1	-	3-23627-7	PIN, RETAIN, GRVD, 3/16 X .854	137
-	-	-	-	1	-	2119799-1	HOLDER,FEED FINGER, AF	136
-	-	REF	REF	-	-	SEE NOTE 4	MEMORY CHIP, PROGRAMMED	135
-	-	1	1	-	-	1633743-1	SERVO FEED LATCH ASM	133
-	1	1	1	1	1	1-18028-2	WASHER, FLAT, REG M4	119
-	-	REF	REF	-	-	2119944-1	FEED FINGER ASSEMBLY,SF	117
-	1	1	1	1	1	455888-5	SPACER, CRIMPER	82
-	1	1	1	1	1	2119956-1	DOCUMENTATION PACKAGE	71
-	1	1	1	1	1	2119791-9	DEPRESSOR, WIRE	70
-	1	1	1	1	1	2119943-1	WASHER, SPACER	69
-	1	-	-	1	1	2119740-1	TAG,IDENTIFICATION	67
-	2	2	2	2	2	2168078-1	SCREW, DRIVE, RH, RoHS, 2 x .188	66
-	1	-	1	1	1	2119793-1	LIMITER, ADJUSTMENT BOLT	63
-	3	-	3	3	3	992763-5	SCR, SET, SOC, CONE POINT, M3 x 4.0	62
-	1	1	1	1	1	2079383-4	SCR, BHSC, RoHS (M4 X 8)	60
-	-	-	-	1	1	5-18022-5	SCR, HEX HD CAP, M4 X 6.0	59
-	1	1	1	1	1	985575-3	SCR, FLT SKT HD CAP M3 X 10.0	57
-	-	-	-	1	1	1338685-1	PAWL, FEED	56
-	4	4	4	4	4	2168400-1	SHCS, LOW HEAD, RoHS, M4 X 12	54
-	1	1	1	1	1	1-5018030-0	NUT, HEX, REG, RoHS, M3.5	52
-	1	1	1	1	1	1901681-1	HOLDDOWN, TERMINAL	51
-	1	1	1	1	1	1-1752354-8	STANDOFF,HOLD-DOWN	50
-	-	-	-	1	2	18023-9	SCR, SKT HD CAP M4 X 6.0	49
-	-	-	-	-	1	2119652-1	FEED CAM, PRE FEED	48
-	-	-	-	-	1	2119653-1	FEED CAM, POST FEED	47
-	1	1	1	1	1	2119656-9	APPLICATOR BASIC ASSEMBLY, SF	46
-	1	-	1	1	1	2119370-1	RAM, AMP STYLE, SIDE FEED	44
-	1	1	1	1	1	2079383-7	SCR, BHSC, RoHS (M8 X 25)	41
-	1	-	1	1	1	2119645-1	DISC, NUMBERED FA WIRE ADJUSTMENT	40
-	1	-	1	1	1	2119957-1	APPLICATOR SHIM PACK	39
-	1	1	1	1	1	2119644-2	RAM WASHER, PRECISION	38
-	1	1	1	1	1	2119085-1	FA HEAD, ATLANTIC STYLE	37
-	1	-	1	1	1	2119092-1	BOLT, ADJUSTMENT	35
-	1	1	1	1	1	1752356-1	SUPPORT, TERMINAL	34
-	2	2	2	2	2	1-2079383-3	SCR, BHSC, RoHS (M4 X 25)	33
-	1	1	1	1	1	2161328-1	HEX HEAD, FLANGED, M5 x 8mm LONG	32
-	1	1	1	1	1	1-1320908-8	SPACER, STRIP GUIDE	30
-	1	1	1	1	1	2119959-1	ASSEMBLY, STRIP GUIDE	29
-	1	1	1	1	1	1-455888-0	SPACER, CRIMPER	28
-	1	1	1	1	1	1320928-6	STRIP GUIDE	24
-	1	1	1	1	1	2168083-2	SCR, SKT HD CAP, RoHS, M4 X 8.0	21
-	1	1	1	1	1	1-18028-2	WASHER, FLAT, REG M4	20
-	1	1	1	1	1	2119533-1	STRIPPER, SIDE FEED	19
-	1	1	1	1	1	2119806-1	INSERT, SHEAR	13
-	1	1	1	1	1	3-22280-3	SPRING, COMPRESSION	12
-	1	1	1	1	1	1-356885-4	STOP, SHEAR	11
-	1	1	1	1	1	2119805-1	SHEAR HOLDER, FRONT	10
-	1	1	1	1	1	318707-1	FLOATING SHEAR, FRONT	9
1	1	1	1	1	1	1633927-8	ANVIL, COMBINATION	8
-	-	-	-	-	-	-	-	7
-	-	-	-	-	-	-	-	6
-	1	1	1	1	1	2119781-1	DEPRESSOR, SHEAR	5
-	1	1	1	1	1	4-238011-5	BLOCK, CRIMPER SPACER	4
1	1	1	1	1	1	1-1803018-0	CRIMPER, INSULATION O	3
-	-	-	-	-	-	-	-	2
1	1	1	1	1	1	1633588-6	CRIMPER, WIRE	1
-77	-7	-6	-5	-2	-1	PART NO	DESCRIPTION	ITEM NO

ATLANTIC VERSION
Shown on sheets 1 of 4 & 2 of 4
(Pacific version shown on sheets 3 of 4 & 4 of 4)

THIS DRAWING IS A CONTROLLED DOCUMENT FOR TYCO ELECTRONICS CORPORATION. IT IS SUBJECT TO CHANGE WITHOUT NOTICE. QUESTIONS ABOUT THIS DRAWING SHOULD BE CONTACTED FOR THE LATEST REVISION.

DIMENSIONS: mm
TOLERANCES UNLESS OTHERWISE SPECIFIED: 0 PLC ±- ; 1 PLC ±- ; 2 PLC ±- ; 3 PLC ±- ; 4 PLC ±- ; ANGLES ±-
MATERIAL -
FINISH - -

DWN BOB HIGMAN 08MAR2012
CHK T ELBIN 08MAR2012
APVD M CLIFFORD 08MAR2012
PRODUCT SPEC -
APPLICATION SPEC -
WEIGHT -

TE Connectivity
Harrisburg, PA 17105-3608

NAME Ocean Side Feed Applicator -

SIZE	CAGE CODE	DRAWING NO	RESTRICTED TO
A1	00779	C-2151610	-

Customer Accessible Production Drawing — SCALE 1:2 — SHEET 1 OF 4 — REV C

AMP 4805 REV 31MAR2000

SHEETS 3 & 4 ARE NOT REQUIRED FOR ATLANTIC VERSION

THIS DRAWING IS UNPUBLISHED. RELEASED FOR PUBLICATION 20
© COPYRIGHT 20 BY TYCO ELECTRONICS CORPORATION. ALL RIGHTS RESERVED.

LOC	DIST
A	66

REVISIONS

P	LTR	DESCRIPTION	DATE	DWN	APVD
	-	SEE SHEET 1	-	-	-

FEED TYPE MECHANICAL

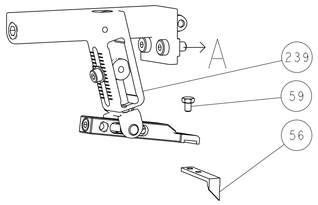

PNEUMATIC

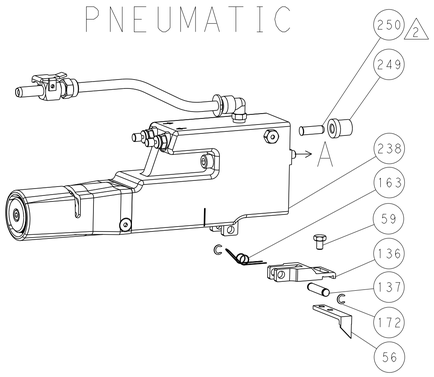

SERVO LATCH PLATE

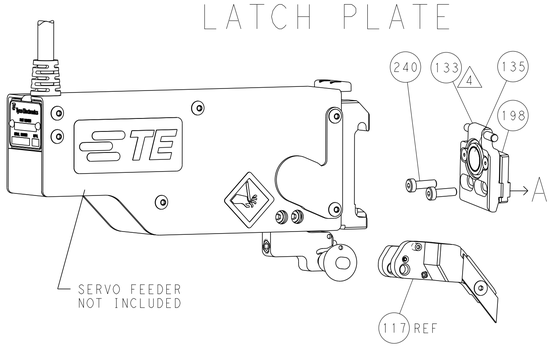

SERVO FEEDER NOT INCLUDED

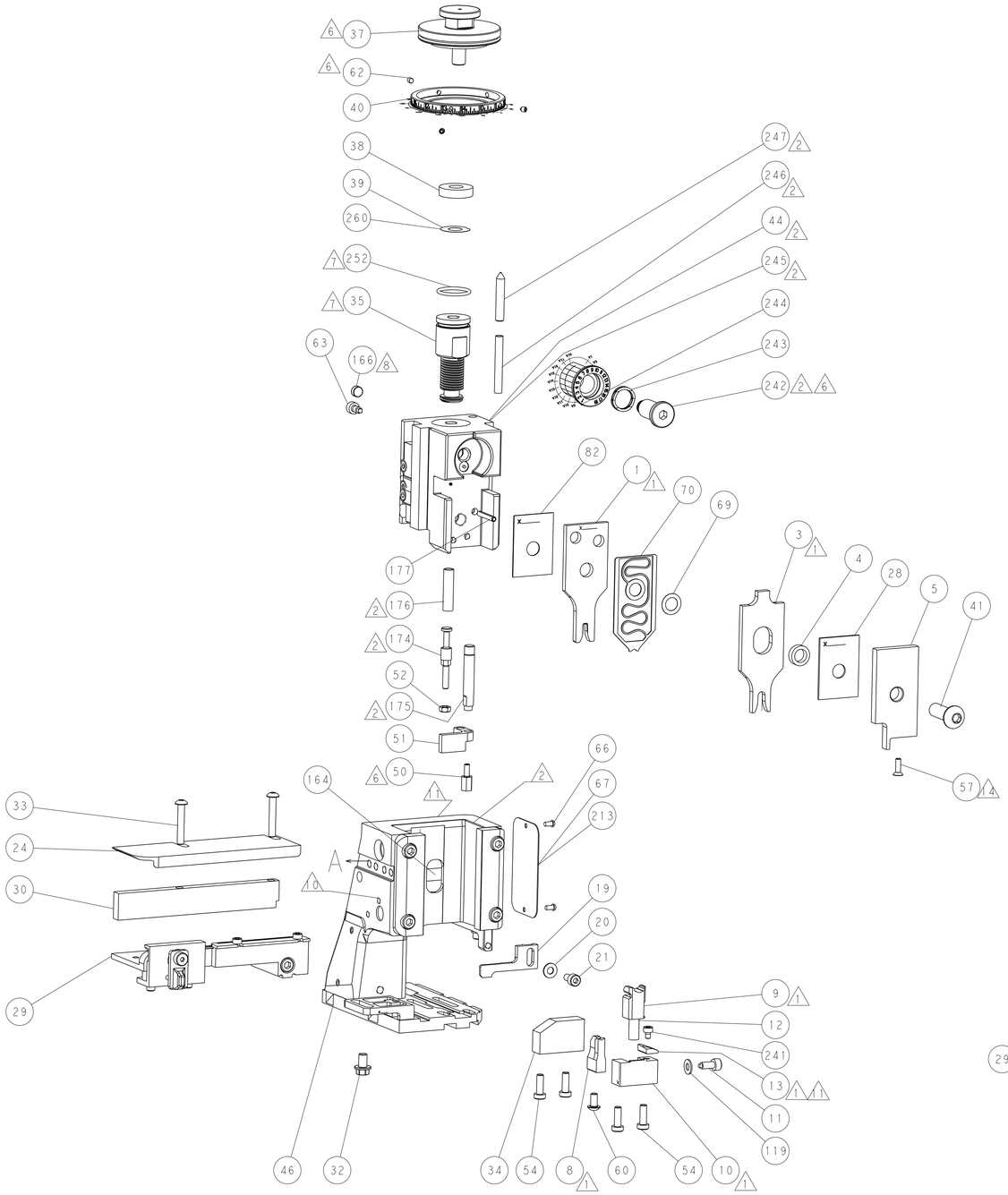

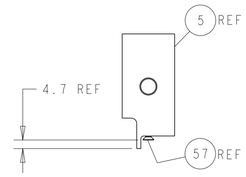

SHEAR DEPRESSOR DETAIL

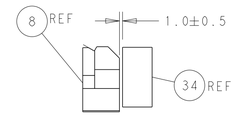

TERMINAL SUPPORT LOCATION

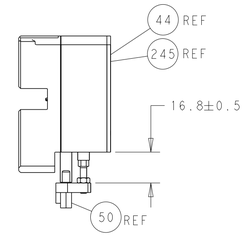

HOLDDOWN SET-UP

ITEM 30 LOCATED AT BACK HOLES

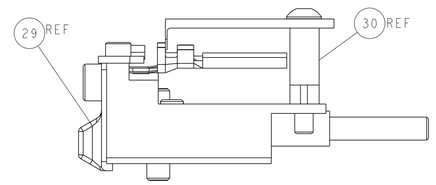

FEED TRACK POSITION GUIDE BY INSULATION BARREL

CAM POSITIONS

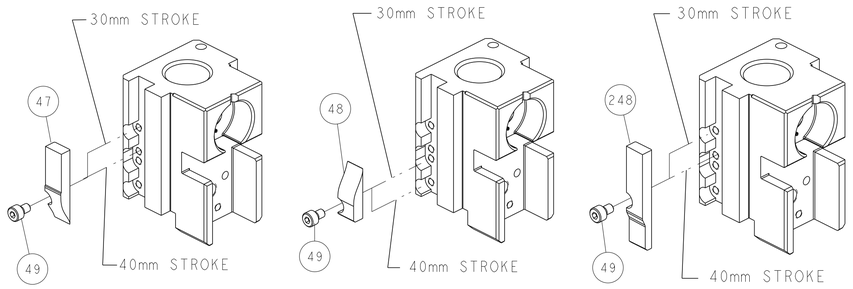

MECHANICAL POST FEED

MECHANICAL PRE FEED

AIR FEED

ATLANTIC VERSION

Shown on sheets 1 of 4 & 2 of 4
(Pacific version shown on sheets 3 of 4 & 4 of 4)

THIS DRAWING IS A CONTROLLED DOCUMENT FOR TYCO ELECTRONICS CORPORATION IT IS SUBJECT TO CHANGE AND THE CONTROLLING ENGINEERING ORGANIZATION SHOULD BE CONTACTED FOR THE LATEST REVISION.

DIMENSIONS: mm

TOLERANCES UNLESS OTHERWISE SPECIFIED:
0 PLC ±
1 PLC ±
2 PLC ±
3 PLC ±
4 PLC ±
ANGLES ±

MATERIAL - -
FINISH - -

DWN BOB HIGMAN 08MAR2012
CHK T. ELBIN 08MAR2012
APVD M CLIFFORD 08MAR2012
PRODUCT SPEC -
APPLICATION SPEC -
WEIGHT -

TE Connectivity
Harrisburg, PA 17105-3608

NAME Ocean Side Feed Applicator -

SIZE	CAGE CODE	DRAWING NO	RESTRICTED TO
A1	00779	C-2151610	-

Customer Accessible Production Drawing | SCALE 1:2 | SHEET 2 OF 4 | REV C

SHEETS 3 & 4 ARE NOT REQUIRED FOR ATLANTIC VERSION

THIS DRAWING IS UNPUBLISHED. RELEASED FOR PUBLICATION 20
© COPYRIGHT 20 BY TYCO ELECTRONICS CORPORATION. ALL RIGHTS RESERVED.

SET UP GAUGE 2119599-1	LOC	DIST
	A	66

REVISIONS

P	LTR	DESCRIPTION	DATE	DWN	APVD
	-	SEE SHEET 1	-	-	-

PACIFIC VERSION TERMINATOR INTERFACE ADAPTER	PART NUMBER	REVISION	DESCRIPTION	FEED TYPE
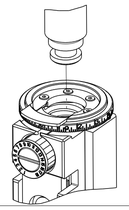	2-2151610-1	C	FINE CRIMP HEIGHT ADJUST	MECHANICAL
	2-2151610-2	C	FINE CRIMP HEIGHT ADJUST	PNEUMATIC
	2-2151610-5	C	FINE CRIMP HEIGHT ADJUST	SERVO LATCH PLATE 4
	2-2151610-7	C	FINE CRIMP HEIGHT ADJUST	NONE
	7-2151610-7	A	CRIMP TOOLING KIT	-

APPLICATOR STYLE CONVERSION CHART

CONVERT TO	PART NUMBERS REQUIRED					
PNEUMATIC FEED	2119950-1	1338685-1	5-18022-5	2119641-2	2119799-1	2063440-1
SERVO LATCH PLATE	2119951-1	-	8-2151610-5	1901094-3	-	2168400-6 (QUANTITY 2)
SMART APPLICATOR	2161326-1	-	8-2151610-4	-	-	-
MECHANICAL FEED	2119949-1	1338685-1	5-18022-5	2119653-2	-	-
SERVO LATCH PLATE	2119951-1	-	8-2151610-5	1901094-3	-	2168400-6 (QUANTITY 2)
SMART APPLICATOR	2161326-1	-	8-2151610-4	-	-	-
MECHANICAL FEED	2119949-1	1338685-1	5-18022-5	2119653-2	-	-
PNEUMATIC FEED	2119950-1	1338685-1	5-18022-5	2119641-2	2119799-1	2063440-1
-	-	-	-	-	-	-
-	-	-	-	-	-	-

APPLICATOR DATA

CRIMP	SIZE	TYPE
WIRE	2.59 mm [.102]	F
INSUL	4.73 mm [.186]	F

APPLICATOR INSTRUCTIONS 408-10389

TERMINAL DATA: DELPHI PACKARD TERMINAL — PACKARD CRIMP SPECIFICATION

TERMINAL NAME: TAXI TERM GT 280 SEALED

WIRE STRIP LENGTH	12 INSULATION DIAMETER RANGE
5.22-5.98 mm [.206-.235 IN]	∅ 2.20-3.20 mm [.087-.126 IN]

TERMINAL APPLICATION SPECIFICATION			
	PACKARD Rev -	-	-
	-	-	-

TERMINALS APPLIED

TE TERMINAL	DELPHI PACKARD TERMINAL	TE SEAL	DELPHI PACKARD SEAL
1572758-1	15304732	1572498-1	15366066
1572491-1	15304720		

WIRE SIZE	CRIMP HEIGHT mm [INCH]	CRIMP HEIGHT REFERENCE SETTING 9
3.00mm2	2.10+/-0.05 [.083+/-.002]	4.5
2.00mm2	1.70+/-0.05 [.067+/-.002]	8.9

1. RECOMMENDED SPARE PARTS
2. GREASE BEARING SURFACES LIGHTLY
3. LUBRICATE DAILY PER THE APPLICATOR INSTRUCTION SHEET SUPPLIED WITH THE APPLICATOR.
4. APPLICATOR SPECIFIC DATA TO BE ENTERED INTO BLANK MEMORY CHIP AT ASSEMBLY. SEE BELOW FOR PART NUMBER:
   MECHANICAL FEED WITH "SMART APPLICATOR" CONVERSION: 8-2151610-4
   PNEUMATIC FEED WITH "SMART APPLICATOR" CONVERSION: 8-2151610-4
   SERVO FEED WITH "FINE CRIMP HEIGHT ADJUST": 8-2151610-5
5. ADJUSTMENT OF THE STRIPPER MAY BE REQUIRED WHEN MOVING THE APPLICATOR BETWEEN BENCH AND LEADMAKER APPLICATIONS.
6. APPLY PART NUMBER 1-23419-5 LOCTITE TO THREADS OF ITEMS 50 & 62. APPLY PART NUMBER 2-23419-6 LOCTIE TO THREADS OF ITEM 242.
7. GREASE THREADS, GROOVE AND O-RING ON ITEMS 139 & 152.
8. MAGNET MUST BE ORIENTED CORRECTLY IN ORDER TO PROPERLY ACTUATE THE COUNTER.
9. CRIMP HEIGHT REFERENCE SETTING WAS THE SETTING USED WHEN THE APPLICATOR WAS QUALIFIED AT THE FACTORY. ADJUSTMENT MAY BE NECESSARY WHEN RUNNING APPLICATOR IN THE FIELD.
10. SPARE FEED CAM STORAGE LOCATION REFER TO INSTRUCTION SHEET FOR ADDITIONAL INFORMATION.
11. TO CONVERT THE APPLICATOR TO A NON-CARRIER CUTTING STYLE, REMOVE ITEM 13 AND ATTACH TO THE LOCATION ON BACK SIDE OF THE HOUSING. REFER TO INSTRUCTION SHEET FOR ADDITIONAL INFORMATION.
12. THIS APPLICATOR APPLIES TERMINAL WITH A SEAL.
13. APPLY TORQ-SEAL IN ALLEN SOCKET TO FILL HOLE AFTER FLAT HD HAS BEEN ADJUSTED TO CORRECT HEIGHT AT QUALIFICATION. APPLY #1-23419-5 LOC-TITE TO THREADS.

*WARNING
ON INSTALLATION, SET WIRE DISC, ITEM 40 TO LARGEST WIRE SIZE SETTING. USE OF SETTINGS BELOW MINIMUM REQUIRED CRIMP HEIGHT SETTING WILL CAUSE DAMAGE TO CRIMP TOOLING.

-77	-27	-25	-22	-21	PART NO	DESCRIPTION	ITEM NO
-	1	1	1	1	2119782-1	FINE ADJUST HEAD ASM, PACIFIC STYLE	251
-	-	-	1	-	2119640-1	PUSH ROD, AIR FEED	250
-	-	-	1	-	1803259-1	BUSHING, FLANGED	249
-	1	1	1	1	1-22279-3	SPRING, COMPRESSION	246
-	1	1	1	1	2119082-7	CAM, SNAIL, INSULATION ADJUSTMENT	244
-	1	1	1	1	2079764-1	WASHER, WAVE SPRING, CREST-TO-CREST	243

	-77	-27	-25	-22	-21	PART NO	DESCRIPTION	ITEM NO
6	-	1	1	1	1	2119083-1	RETAINER, INSULATION DIAL	242
	-	1	1	1	1	7-18023-7	SCR, SKT HD CAP M3 X 4.0	241
	-	-	2	-	-	2168400-6	SHCS, LOW HEAD, RoHS, M5 X 16	240
	-	-	-	-	1	2119580-1	MECHANICAL FEED ASSEMBLY	239
	-	-	-	1	-	2063440-1	AIR FEED MODULE	238
	-	-	1	-	-	2119740-2	TAG,IDENTIFICATION	213
	-	-	1	-	-	1901094-3	SPACER, FEEDER	198
	-	1	1	1	1	993111-1	PIN, SLOTTED SPRING 3.0 X 20.0	177
	-	1	1	1	1	8-22280-7	SPRING, COMPRESSION	176
	-	1	1	1	1	1752353-2	GUIDE PIN,HOLDDOWN	175
	-	1	1	1	1	1901680-2	GUIDE PIN,HOLDDOWN	174
	-	-	-	2	-	21045-3	RING, RETAIN, EXTERN, 3/16 CRESCENT	172
	-	1	1	1	1	994969-1	MAGNET, RARE EARTH HIGH ENERGY	166
	-	REF	REF	REF	REF	994970-2	COUNTER, MAGNETIC	164
	-	-	-	1	-	240638-1	SPRING, FEED FINGER	163
7	-	1	1	1	1	8-21084-1	O-RING, .801 ID, .070 DIA. MAT.	152
	-	-	-	1	-	2119641-2	FEED CAM, AIR FEED	151
	-	1	1	1	1	2119798-2	DETENT PIN	145
	-	1	1	1	1	2079383-8	SCR, BHSC, RoHS (M4 X 16)	144
	-	4	4	4	4	2168400-5	SHCS, LOW HEAD, RoHS, M4 X 20	143
	-	-	-	-	1	2119653-2	FEED CAM, POST FEED	142
	-	1	1	1	1	1-2119656-0	APPLICATOR BASIC ASSEMBLY, SF	141
	-	1	1	1	1	2119650-1	RAM, ASIAN STYLE, SIDE FEED	140
7	-	1	1	1	1	2119092-2	BOLT, ADJUSTMENT	139
	-	-	-	1	-	3-23627-7	PIN, RETAIN, GRVD, 3/16 X .854	137
	-	-	-	1	-	2119799-1	HOLDER,FEED FINGER, AF	136
	-	-	REF	-	-	SEE NOTE 4	MEMORY CHIP, PROGRAMMED	135
	-	-	1	-	-	1633743-1	SERVO FEED LATCH ASM	133
	-	1	1	1	1	1-18028-2	WASHER, FLAT, REG M4	119
	-	-	REF	-	-	2119944-1	FEED FINGER ASSEMBLY,SF	117
	-	1	1	1	1	455888-5	SPACER, CRIMPER	82
	-	1	1	1	1	2119956-1	DOCUMENTATION PACKAGE	71
	-	1	1	1	1	2119791-9	DEPRESSOR, WIRE	70
	-	1	1	1	1	2119943-1	WASHER, SPACER	69
	-	1	-	1	1	2119740-1	TAG,IDENTIFICATION	67
	-	2	2	2	2	2168078-1	SCREW, DRIVE, RH, RoHS, 2 x .188	66
	-	1	1	1	1	2119793-1	LIMITER, ADJUSTMENT BOLT	63
6	-	3	3	3	3	992763-5	SCR, SET, SOC, CONE POINT, M3 x 4.0	62
	-	-	-	1	1	5-18022-5	SCR, HEX HD CAP, M4 X 6.0	59
13	-	1	1	1	1	985575-3	SCR, FLT SKT HD CAP M3 X 10.0	57
	-	-	-	1	1	1338685-1	PAWL, FEED	56
	-	1	1	1	1	1-5018030-0	NUT, HEX, REG, RoHS, M3.5	52
	-	1	1	1	1	1901681-1	HOLDDOWN, TERMINAL	51
6	-	1	1	1	1	1-1752354-8	STANDOFF,HOLD-DOWN	50
	-	-	-	1	2	18023-9	SCR, SKT HD CAP M4 X 6.0	49
	-	-	-	-	1	2119652-1	FEED CAM, PRE FEED	48
	-	1	1	1	1	2079383-7	SCR, BHSC, RoHS (M8 X 25)	41
	-	1	1	1	1	2119645-1	DISC, NUMBERED FA WIRE ADJUSTMENT	40
	-	1	1	1	1	2119957-1	APPLICATOR SHIM PACK	39
	-	1	1	1	1	2119644-2	RAM WASHER, PRECISION	38
	-	1	1	1	1	1752356-1	SUPPORT, TERMINAL	34
	-	2	2	2	2	1-2079383-3	SCR, BHSC, RoHS (M4 X 25)	33
	-	1	1	1	1	2161328-1	HEX HEAD, FLANGED, M5 x 8mm LONG	32
	-	1	1	1	1	1-1320908-8	SPACER, STRIP GUIDE	30
	-	1	1	1	1	2119959-1	ASSEMBLY, STRIP GUIDE	29
	-	1	1	1	1	1-455888-0	SPACER, CRIMPER	28
	-	1	1	1	1	1320928-6	STRIP GUIDE	24
	-	1	1	1	1	2168083-2	SCR, SKT HD CAP, RoHS, M4 X 8.0	21
	-	1	1	1	1	1-18028-2	WASHER, FLAT, REG M4	20
	-	1	1	1	1	2119533-1	STRIPPER, SIDE FEED	19
1	-	1	1	1	1	2119806-1	INSERT, SHEAR	13
	-	1	1	1	1	3-22280-3	SPRING, COMPRESSION	12
	-	1	1	1	1	1-356885-4	STOP, SHEAR	11
1	-	1	1	1	1	2119805-1	SHEAR HOLDER, FRONT	10
1	-	1	1	1	1	318707-1	FLOATING SHEAR, FRONT	9
1	1	1	1	1	1	1633927-8	ANVIL, COMBINATION	8
	-	-	-	-	-	-	-	7
	-	-	-	-	-	-	-	6
	-	1	1	1	1	2119781-1	DEPRESSOR, SHEAR	5
	-	1	1	1	1	4-238011-5	BLOCK, CRIMPER SPACER	4
1	1	1	1	1	1	1-1803018-0	CRIMPER, INSULATION O	3
	-	-	-	-	-	-	-	2
1	1	1	1	1	1	1633588-6	CRIMPER, WIRE	1

PACIFIC VERSION

Shown on sheets 3 of 4 & 4 of 4
(Atlantic version shown on sheets 1 of 4 & 2 of 4)

THIS DRAWING IS A CONTROLLED DOCUMENT FOR TYCO ELECTRONICS CORPORATION. IT IS SUBJECT TO CHANGE WITHOUT NOTICE. ANY OTHER ORGANIZATION SHOULD BE CONTACTED FOR THE LATEST REVISION.

DWN	BOB HIGMAN	08MAR2012
CHK	T.ELBIN	08MAR2012
APVD	M.CLIFFORD	08MAR2012

TE Connectivity
Harrisburg, PA 17105-3608

DIMENSIONS: mm

TOLERANCES UNLESS OTHERWISE SPECIFIED:
0 PLC ±-
1 PLC ±-
2 PLC ±-
3 PLC ±-
4 PLC ±-
ANGLES ±-

MATERIAL - -
FINISH - -

PRODUCT SPEC -
APPLICATION SPEC -
WEIGHT -

NAME: Ocean Side Feed Applicator -

SIZE	CAGE CODE	DRAWING NO	RESTRICTED TO
A1	00779	C-2151610	-

Customer Accessible Production Drawing — SCALE 1:2 — SHEET 3 OF 4 — REV C

SHEETS 1 & 2 ARE NOT REQUIRED FOR PACIFIC VERSION

THIS DRAWING IS UNPUBLISHED. RELEASED FOR PUBLICATION 20
© COPYRIGHT 20 BY TYCO ELECTRONICS CORPORATION. ALL RIGHTS RESERVED.

LOC	DIST
A	66

REVISIONS

P	LTR	DESCRIPTION	DATE	DWN	APVD
	-	SEE SHEET 1	-	-	-

FEED TYPE

MECHANICAL

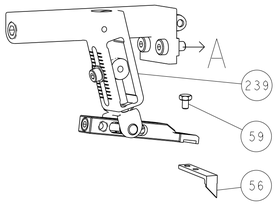

PNEUMATIC

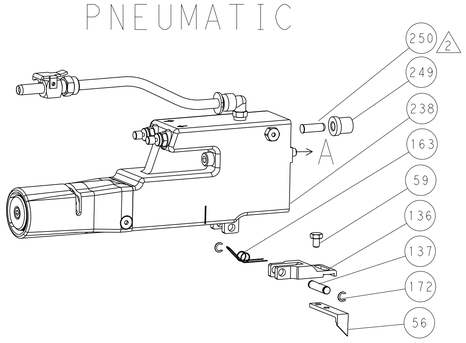

SERVO LATCH PLATE

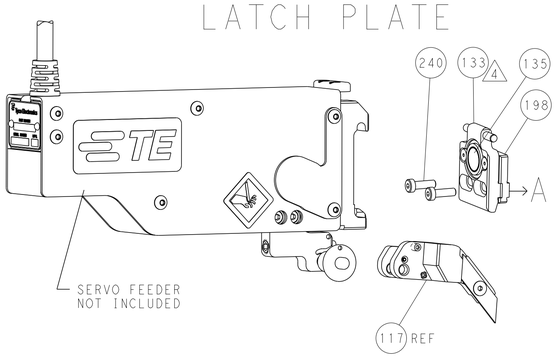

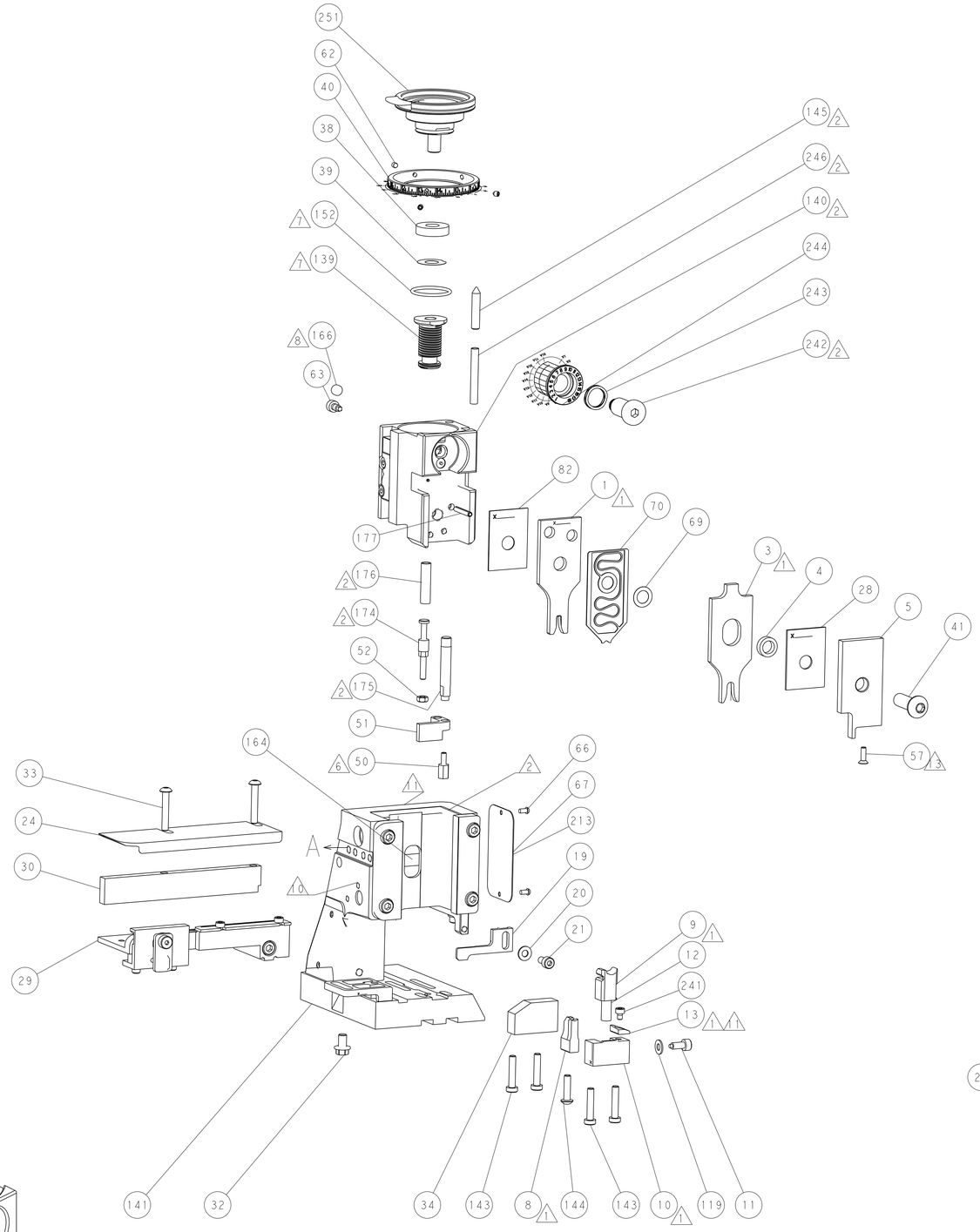

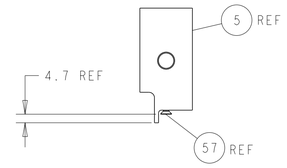

SHEAR DEPRESSOR DETAIL

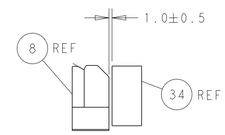

TERMINAL SUPPORT LOCATION

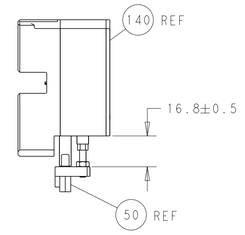

HOLDDOWN SET-UP

ITEM 30 LOCATED AT
BACK HOLES

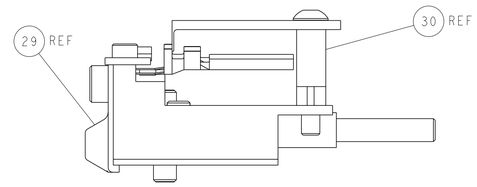

FEED TRACK POSITION
GUIDE BY INSULATION BARREL

CAM POSITIONS

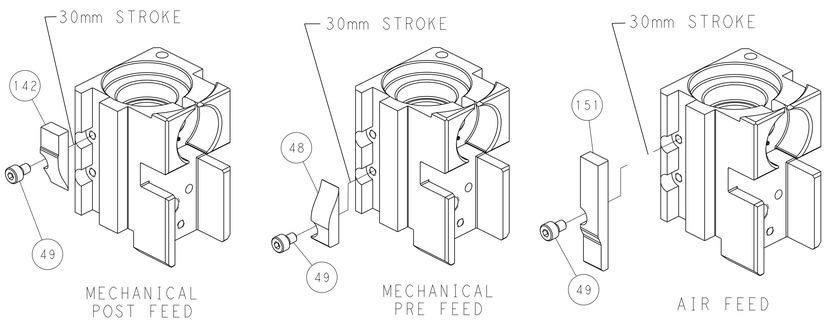

MECHANICAL
POST FEED

MECHANICAL
PRE FEED

AIR FEED

PACIFIC VERSION

Shown on sheets 3 of 4 & 4 of 4
(Atlantic version shown on sheets 1 of 4 & 2 of 4)

THIS DRAWING IS A CONTROLLED DOCUMENT FOR TYCO ELECTRONICS CORPORATION IT IS SUBJECT TO MODIFICATION. ALL PRINTS NOT DATED WITHIN THIS ORGANIZATION SHOULD BE CONTACTED FOR THE LATEST REVISION.

DIMENSIONS: mm

TOLERANCES UNLESS OTHERWISE SPECIFIED:
0 PLC ±-
1 PLC ±-
2 PLC ±-
3 PLC ±-
4 PLC ±-
ANGLES ±-

MATERIAL - - -
FINISH - - -

DWN BOB HIGMAN	08MAR2012	TE Connectivity, Harrisburg, PA 17105-3608
CHK T.ELBIN	08MAR2012	
APVD M.CLIFFORD	08MAR2012	NAME: Ocean Side Feed Applicator -
PRODUCT SPEC -		
APPLICATION SPEC -		
WEIGHT -		SIZE A1 · CAGE CODE 00779 · DRAWING NO C-2151610 · RESTRICTED TO -
Customer Accessible Production Drawing		SCALE 1:2 · SHEET 4 OF 4 · REV C

AMP 4805 REV 31MAR2000

SHEETS 1 & 2 ARE NOT REQUIRED FOR PACIFIC VERSION